1998

MITSUBISHI

Service Manual

LCD PROJECTOR
LC6 CHASSIS

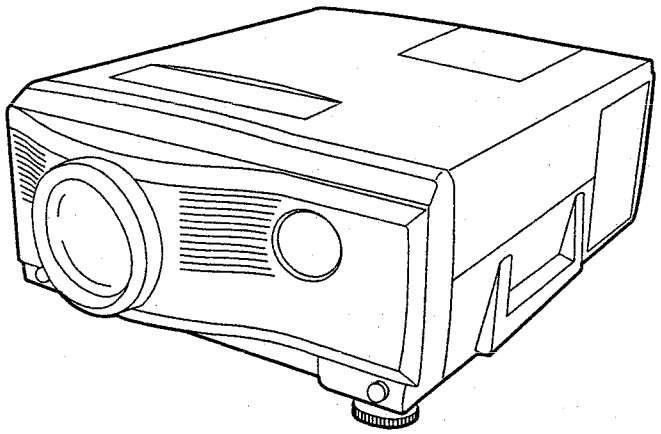

MODEL
LVP-X200E

CAUTION
Before servicing this chassis, it is important that the service person reads the "SAFETY PRECAUTIONS" in this service manual.

PRECAUTION
Avant un entretien/dépannage de ce châssis, il est important que la personne en charge lise les "MESURES DE SECURITE" dans ce manuel d'entretien/dépannage.

VORSICHT
Bevor Wartungsarbeiten an diesem Chassis ausgeführt werden, muß das Wartungspersonal die "SICHERHEITSHINWEISE" in dieser Wartungsanleitung durchlesen.

ATTENZIONE
Prima di un intervento di assistenza tecnica sul telaio, è importante che il personale di assistenza tecnica legga le "MISURE DI SICUREZZA" contenute in questo manuale di assistenza.

PRECAUCIÓN
Antes de servir este chasis, es importante que la persona de servicio lea las "PRECAUCIONES DE SEGURIDAD" de este manual de servicio.

注意
维修服务人员，当进行本机箱的维修服务之前，请一定要细读本服务手册中的"有关安全的注意事项"。

MITSUBISHI ELECTRIC

Copyright © 1998 Mitsubishi Electric Corporation All Rights Reserved.

ENGLISH
FRANÇAIS
DEUTSCH
ITALIANO
ESPAÑOL
中文

ENGLISH

CONTENTS

SPECIFICATIONS 1
SAFETY PRECAUTIONS 1
WARNING 1
LEAKAGE CURRENT COLD CHECK 1
PCBs LOCATION 2
REMOVING COMPONENTS 3
LEAD DRESS 7
REPLACING THE LAMP BOX 9
LENS FOCUS TRACKING ADJUSTMENT 10
ELECTRICAL ADJUSTMENTS 11
Necessary Equipment and Connecting 11
Test Signal 11
Adjustment with Microsoft® Windows® 95 Operating System 12
Adjustment Procedure 13
Lamp Power Circuit Adjustment
1. Power of Lamp Power Source Adjustment 13
A/D Pre-Amplification Circuit Adjustment
2. Clamp Level Adjustment 14
3. A/D Convertor Adjustment 15
Liquid Crystal Panel Driving Adjustment Circuit Adjustment
4. Ghost Adjustment 16
5. Vertical Line Adjustment 17
6. Flicker Adjustment 18
LED ERROR INDICATION 19
OPTION BOARD INSTALLATION
PARTS LIST
REPACKING PROCEDURE
ELECTRICAL PARTS AND OTHERS
IC BLOCK DIAGRAM
SCHEMATIC DIAGRAM
PRINTED CIRCUIT BOARD PARTS LAYOUT

TRADEMARK, REGISTERED TRADEMARK

Apple, Macintosh are registered trademarks of Apple Computer Inc.
IBM, VGA, PS/2 are trademarks or registered trademarks of International Business Machines Corporation.
Microsoft®, Windows® 95 is a registered trademark of Microsoft in the U.S. and other countries.
Other brand or product names are trademarks or registered trademarks of their respective holders.

SPECIFICATIONS

- **Power Input** : AC 100~240V ; 50 / 60Hz
- **Rated Input** : 5.0A
- **LCD Panels** : 1.3inch LCD panel: 3 pieces(for R,G,B)
  Pixels 1,024 × 768= 786,432 pixels
  Total 2,359,296 pixels
  Active pixel rate: 99.99% or more (each panel)
- **Projection Lens** : F 2.3~2.7 f = 53.3-69.3 mm
- **Light Source Lamp** : 330W DC metal halide lamp
- **Picture Size** : aspect rate 4:3 40~300 inch
- **Speakers** : 60mm round type, 2 pcs.
- **S-Video Input** : Luminance signal: 1.0Vp-p 75Ω (negative signal)
  Chroma signal: 0.286Vp-p 75Ω (burst signal)
- **Video Input** : 1.0Vp-p 75Ω (negative sync.)
- **Audio Inputs** : 350mVrms, 10kΩ or more
- **PC Audio Inputs** : 350mVrms, 10kΩ or more
- **Analog RGB Input** : Mini D-SUB 15P
  RGB: 0.7Vp-p 75Ω (positive sync.)
  YCbCr: 1.0Vp-p (Y) (negative sync.)
  CbCr: 0.7Vp-p
  HD/CS: TTL level (positive)
  VD: TTL level (positive)
- **Cabinet Dimensions** : 330(W) × 145(H) × 398(D) mm (Legs and lens are not included.)
- **Weight** : 21.5 lb. (9.8kg)
- **Length of Power Cord** : 114 inch (2.9m)

ENGLISH

- Weight and dimensions shown are approximate.
- Design and specifications are subject to change without notice.

SAFETY PRECAUTIONS

NOTICE: Observe all cautions and safety related notes located inside the cabinet and on the chassis.

WARNING

1. An isolation transformer should be used between the projector and the AC supply point before any test/service is performed on a LIVE chassis projector.
2. Operation of this projector outside the cabinet or with the cover removed, involves a shock hazard from the projector power supplies. Work on the projector should not be attempted by anyone who is not thoroughly familiar with precautions necessary when working on high voltage equipment.
3. When service is required, observe the original lead dressing. Extra precaution should be given to assure correct lead dressing in the high voltage area. Where a short-circuit has occurred, replace those components that indicate evidence of overheating.

LEAKAGE CURRENT COLD CHECK

Before returning the projector to the customer, it is recommended that leakage current be measured according to the following methods.
With the AC plug removed from the AC source, place a jumper across the two AC plug prongs. Turn the projector AC switch on. Using an 500V D.C. Insulation Tester, connect one lead to the jumpered AC plug and touch the other lead to each exposed metal part (screwheads, etc.), particularly any exposed metal part having a return path to the chassis. Exposed metal parts having a return path to the chassis should have a minimum resistance reading of 4 megohm. Any resistance below this value indicates an abnormality which requires corrective action.

ENGLISH

PCBs LOCATION

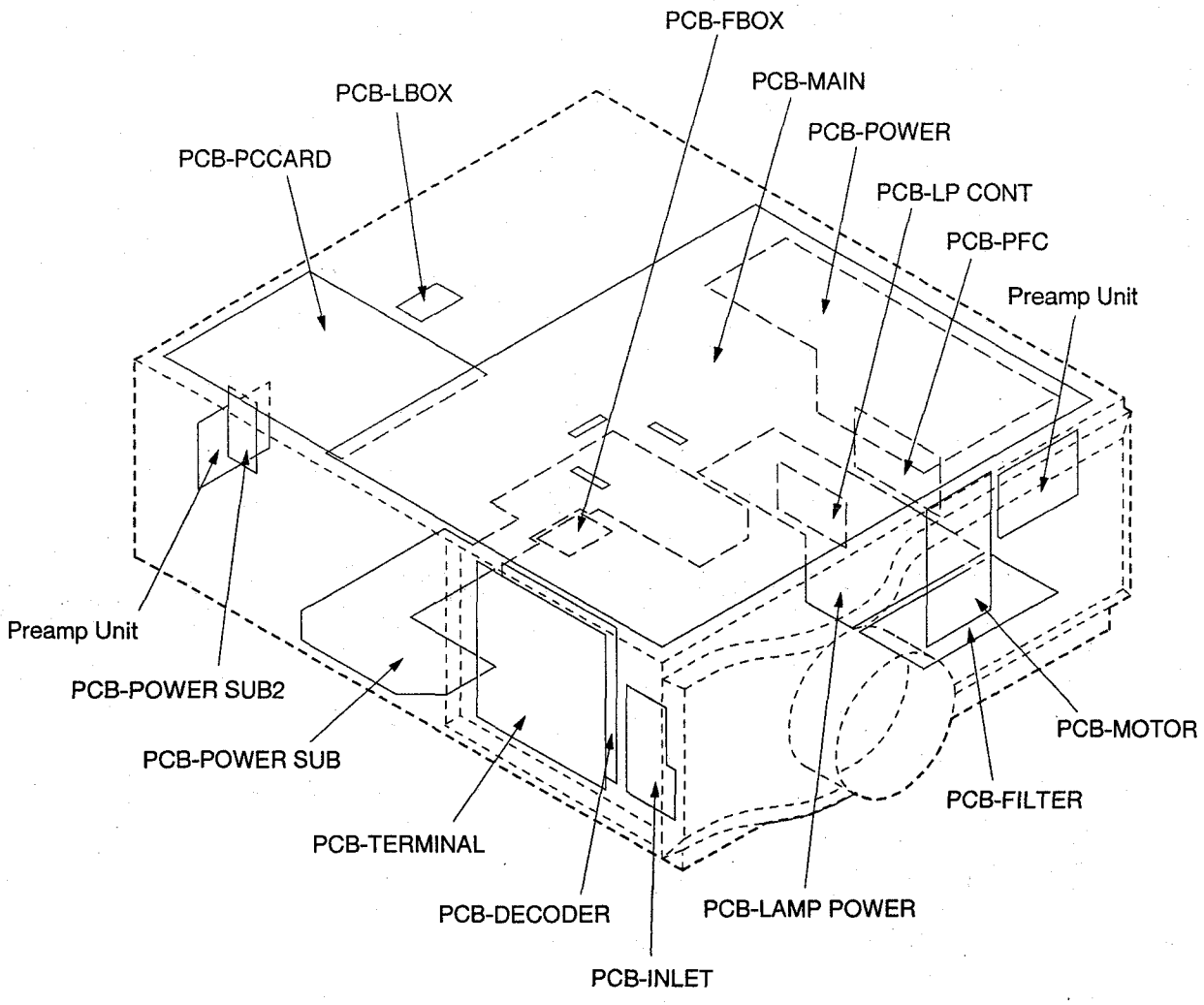

Fig. 1

REMOVING COMPONENTS

Refer to PARTS LIST for Parts Number

Note: Be sure to attach the Top Cover Assy and the Top Case separately to the product. If they are attached together, the explosion-proof shutter may not operate. Do not turn on the product in such condition, or the lamp may explode.

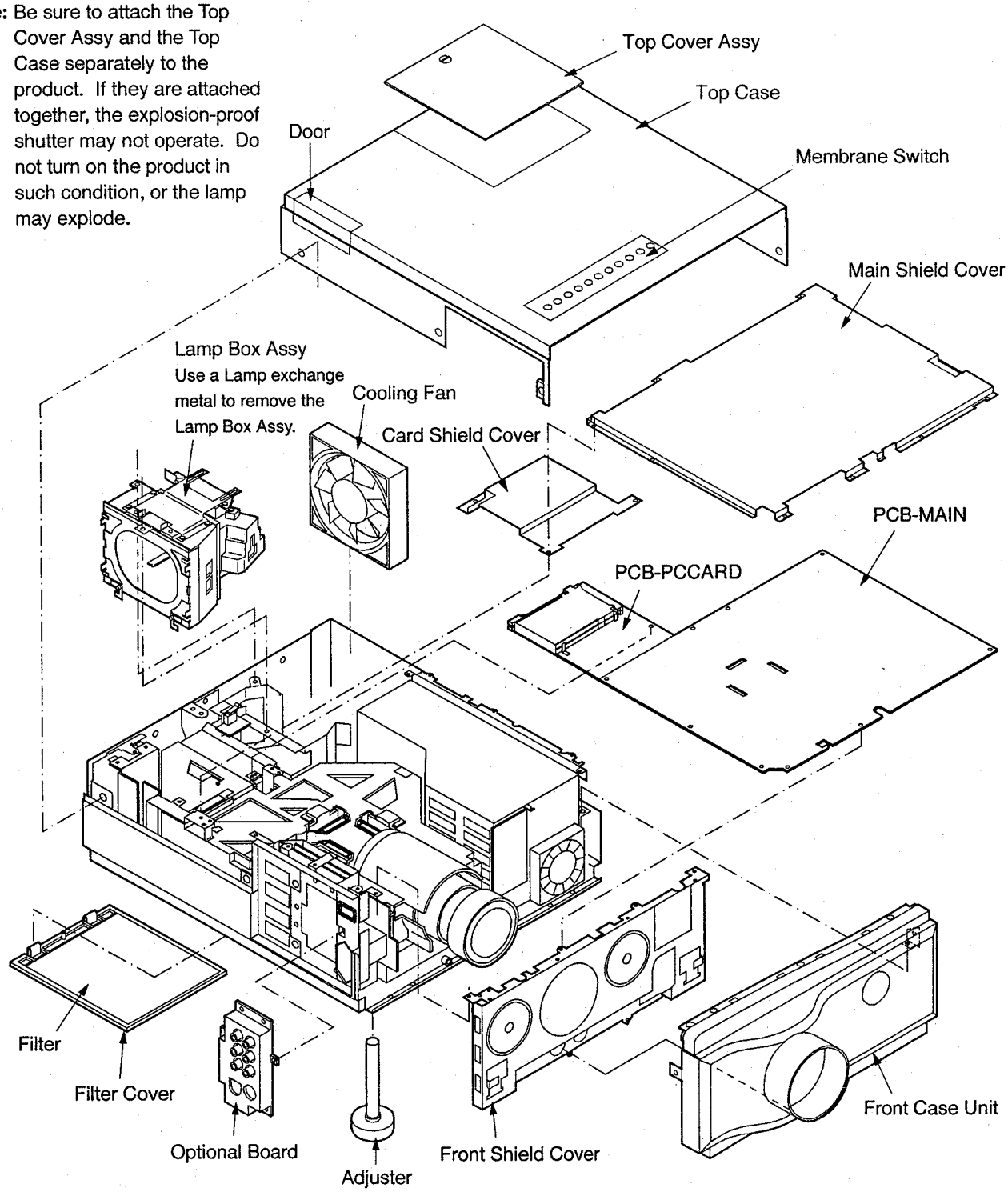

Fig. 2-1

Parts Name	Number of Screws
Optional Board	6
Top Case	8
Top Cover Assy	1
Lamp Box Assy	2
Front Case Unit	3
Main Shield Cover	11

Parts Name	Number of Screws
Card Shield Cover	3
PCB-MAIN	8
PCB-PCCARD	4
Front Shield Cover	5
Filter Cover	(2 Hooks)

Number of Screws : The number of Screws holding Parts.

Table 1-1

ENGLISH

Refer to PARTS LIST for Parts Number

Note: Workers shall put on the wrist band to protect LCD against Static electricity during the operations.

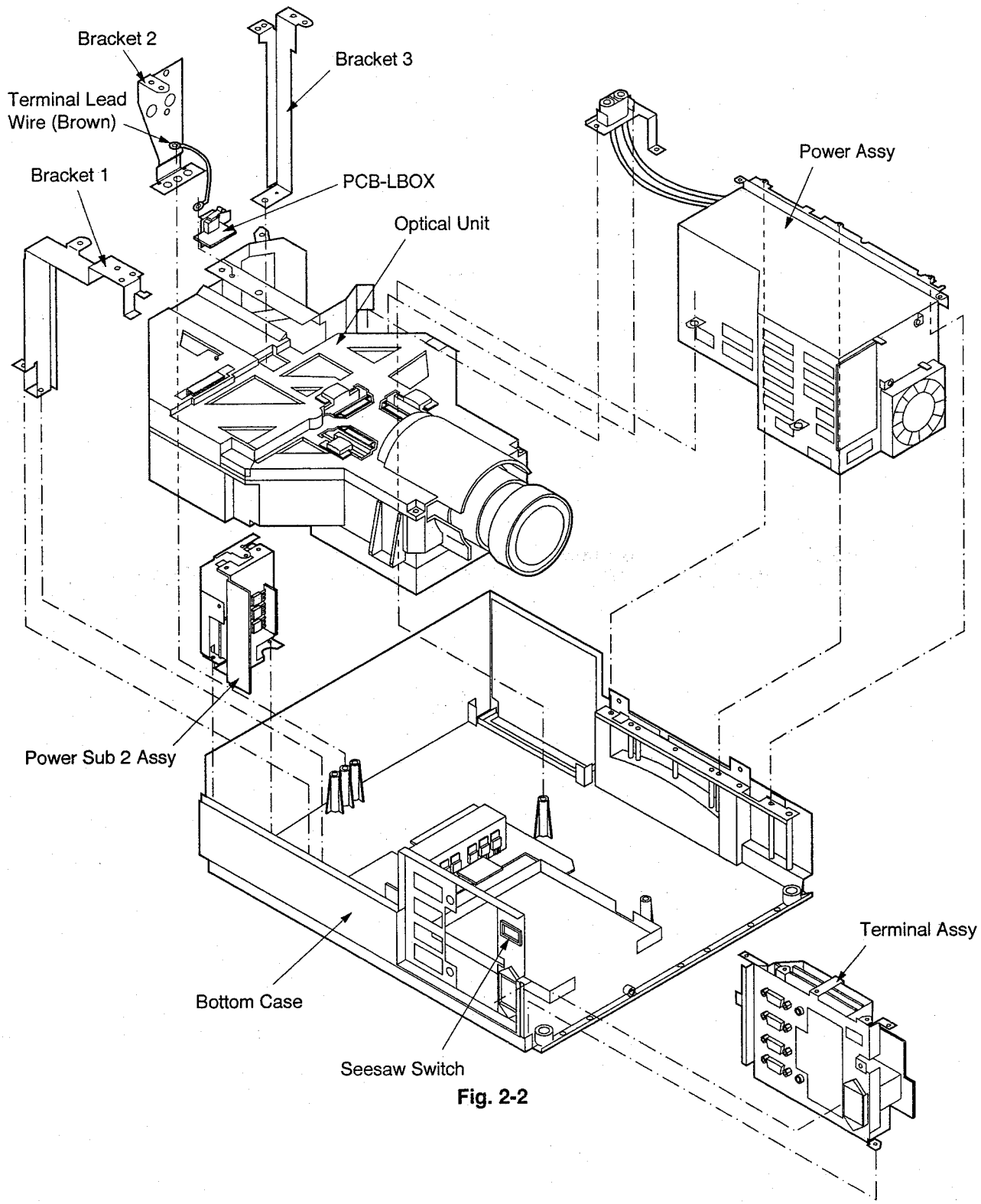

Fig. 2-2

Parts Name	Number of Screws
Power Assy	7
Bracket 1	2
Bracket 2	1
Bracket 3	1

Parts Name	Number of Screws
PCB-LBOX	2
Optical Unit	3
Power Sub 2 Assy	2
Terminal Assy	6

Number of Screws : The number of Screws holding Parts.

Table 1-2

Refer to PARTS LIST for Parts Number

Note: Workers shall put on the wrist band to protect LCD against Static electricity during the operations.

Power Sub 2 Assy Parts

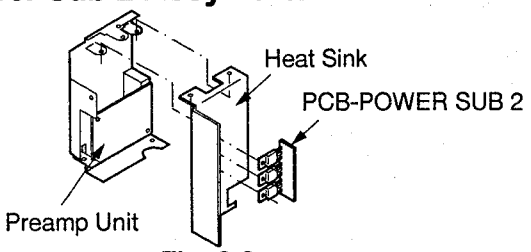

Fig. 2-3

Parts Name	Number of Screws
PCB-POWER SUB 2	3
Heat Sink	2
PREAMP UNIT	2

Table 1-3

Terminal Assy Parts

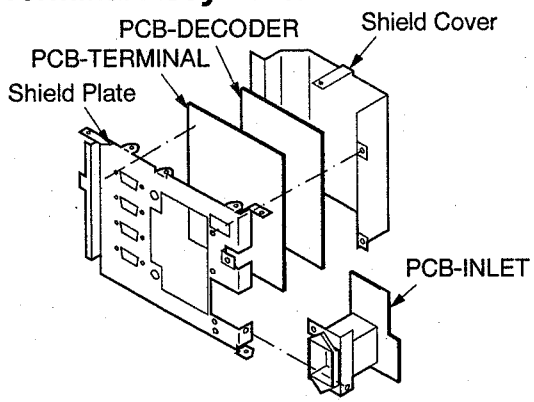

Fig. 2-4

Parts Name	Number of Screws
Shield Cover	7
PCB-DECODER	(4 Hooks)
PCB-TERMINAL	10
PCB-INLET	3

Table 1-4

Power Assy Parts

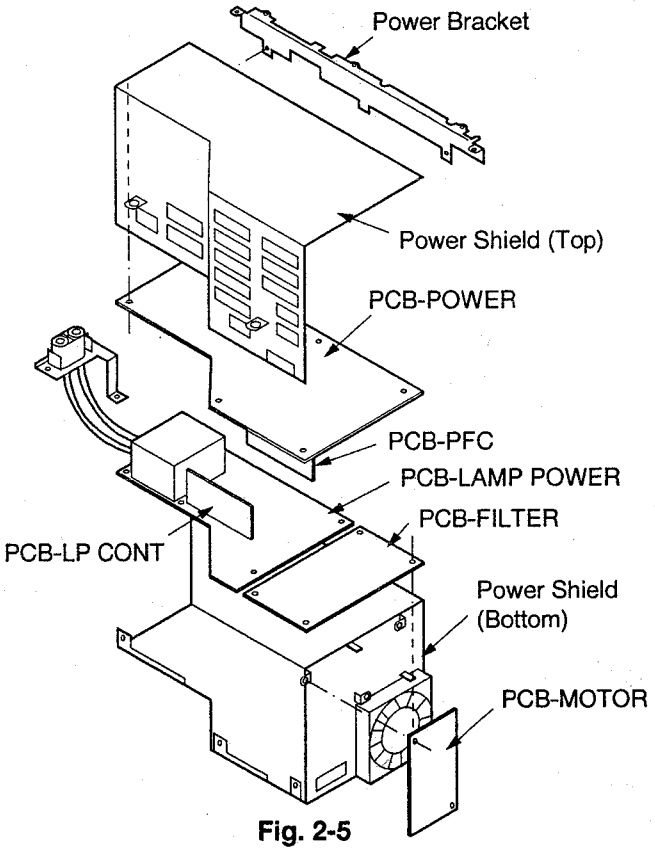

Fig. 2-5

Parts Name	Number of Screws
Power Bracket	2
Power Shield (Top)	5
PCB-POWER	1 (5 Hooks)
PCB-PFC	none
PCB-LAMP POWER	(4 Hooks)
PCB-MOTOR	2
PCB-FILTER	1 (3 Hooks)
PCB-LP CONT	none

Table 1-5

Bottom Case Parts

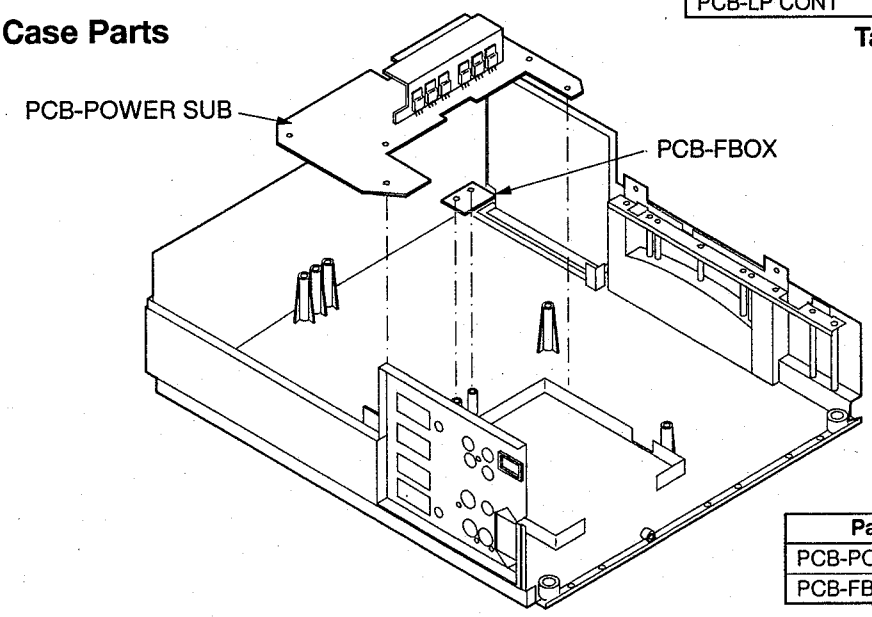

Fig. 2-6

Parts Name	Number of Screws
PCB-POWER SUB	6
PCB-FBOX	2

Table 1-6

ENGLISH

ENGLISH

Optical Unit Parts

Refer to PARTS LIST for Parts Number
* After replacing the Lens Unit or the LCD Block, make lens focus tracking adjustment.

Note: Workers shall put on the wrist band to protect LCD against Static electricity during the operations.

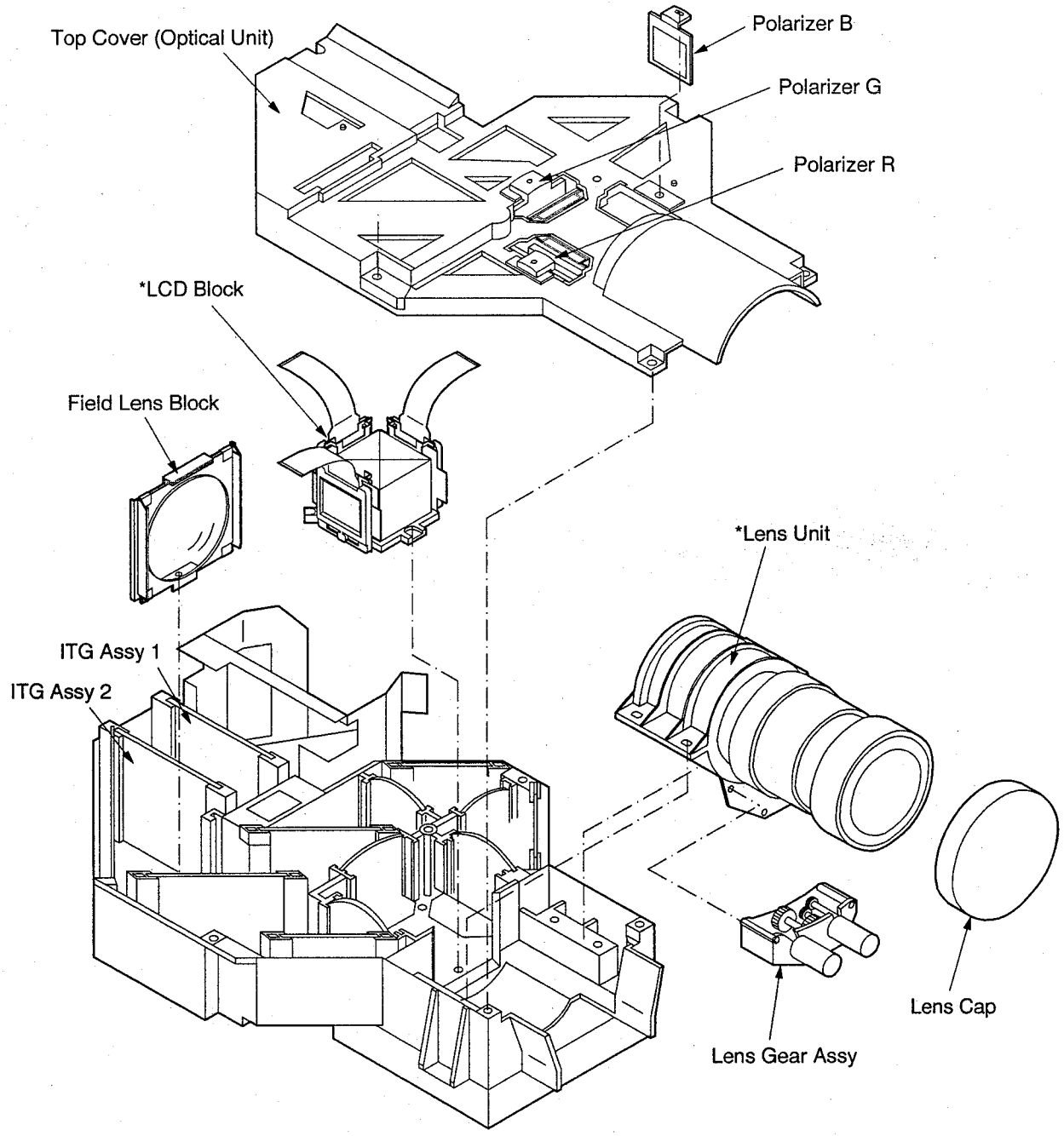

Fig. 2-7

Parts Name	Number of Screws
Top Cover (Optical Unit)	6
Polarizer R	1
Polarizer G	1
Polarizer B	1

Parts Name	Number of Screws
LCD Block	3
Field Lens Block	1
Lens Unit	4
Lens Gear Assy	3

Number of Screws : The number of Screws holding Parts.

Table 1-7

LEAD DRESS

Note: 1. The inner wires are clamped so that they do not come close to heat generating or high voltage parts. After servicing route all wires in their original position.
2. Workers shall put on the wrist band to protect LCD against Static electricity during the operations.

1. Clamp the Lead Wires along the Clamping Zone* shown in the figure below.
*Clamping Zone shows the route of the Lead Wire.

———	Clamping Zone*
~~	Hidden Clamping Zone*

ENGLISH

Lead dress before Optical Unit is set

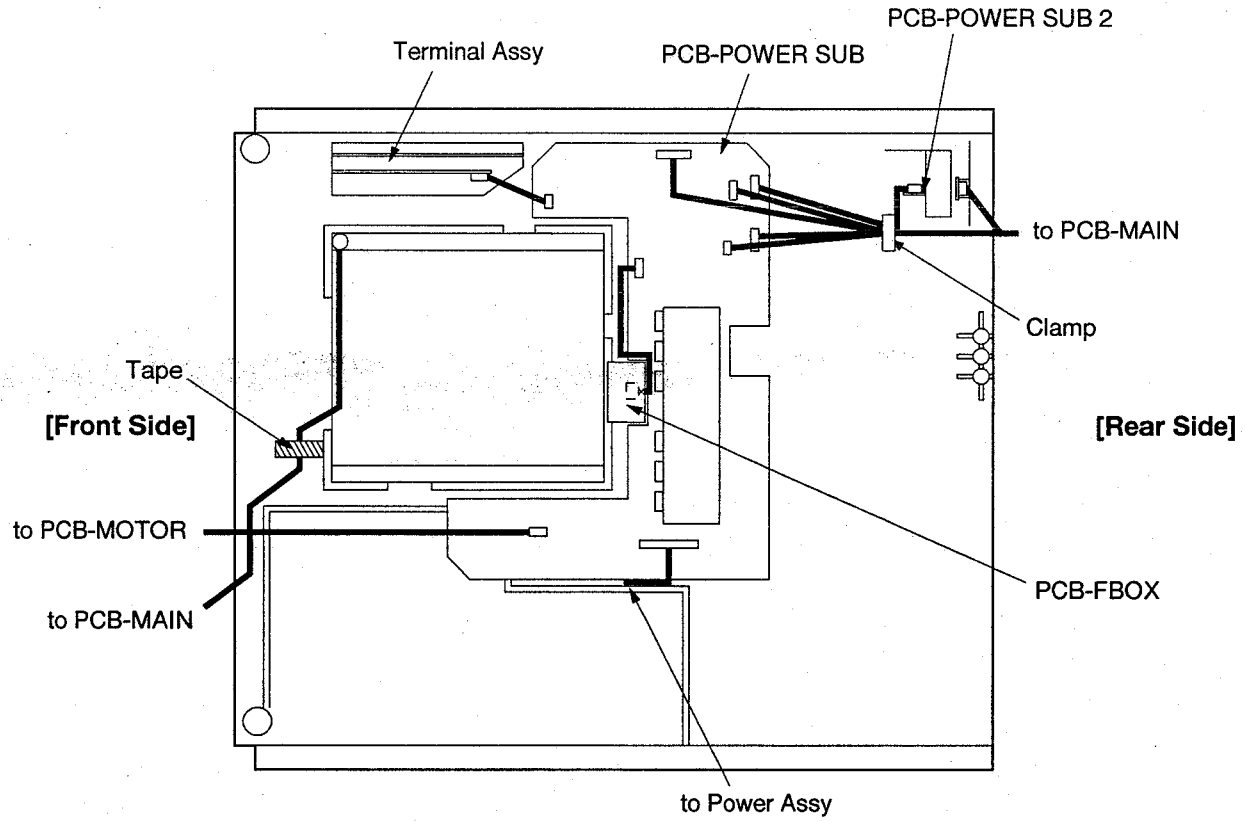

Fig. 3-1

Lead dress When Optical Unit and Power Assy are set

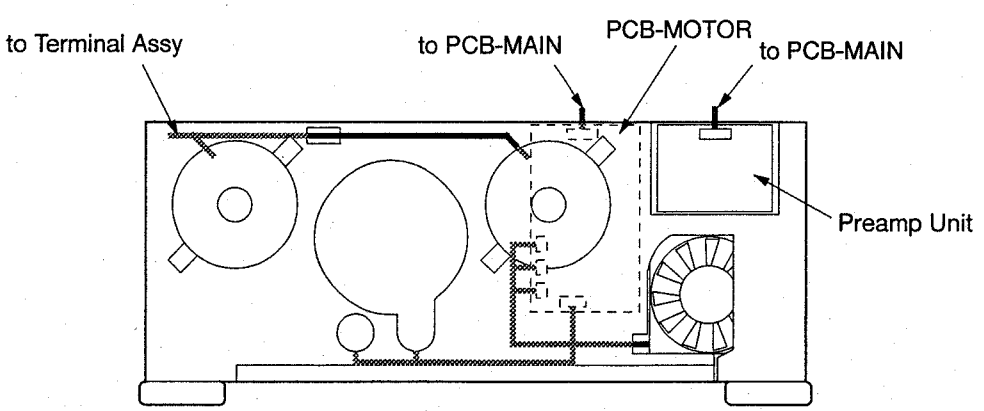

Fig. 3-2

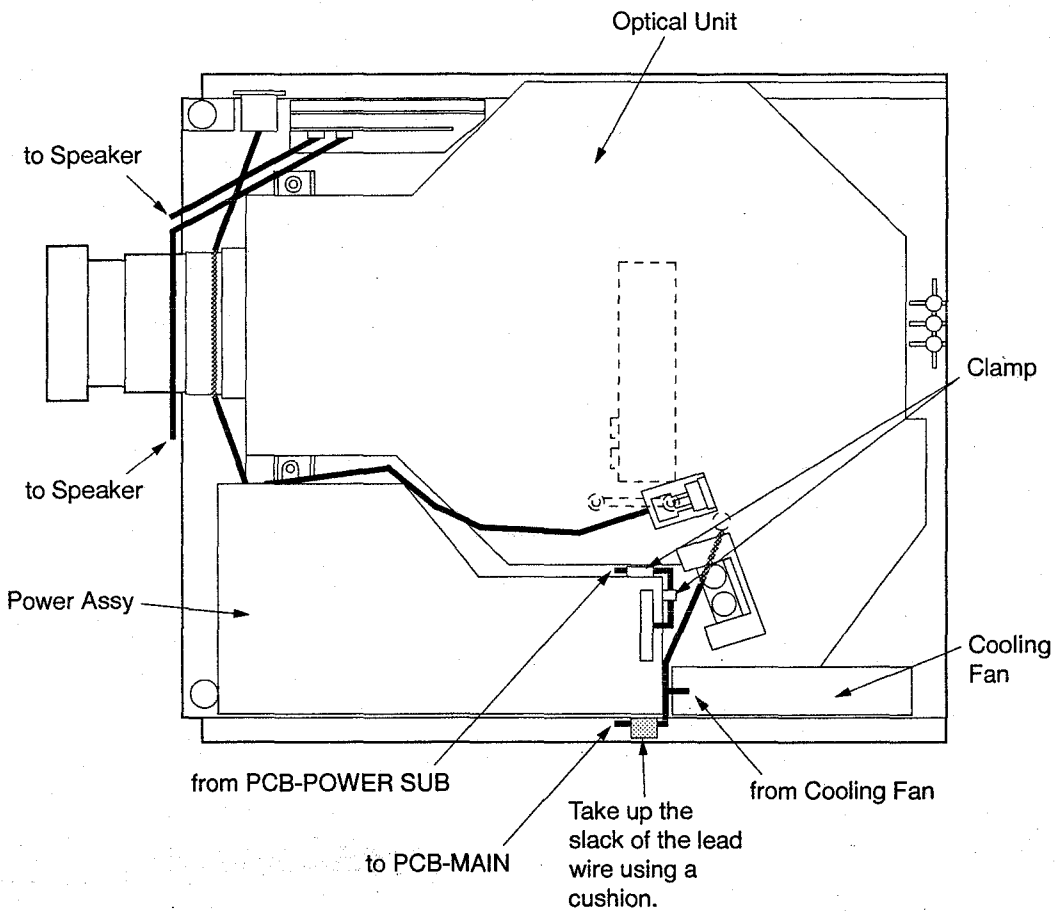

Fig. 3-3

Lead dress When PCB-MAIN and Card Shield Cover are set

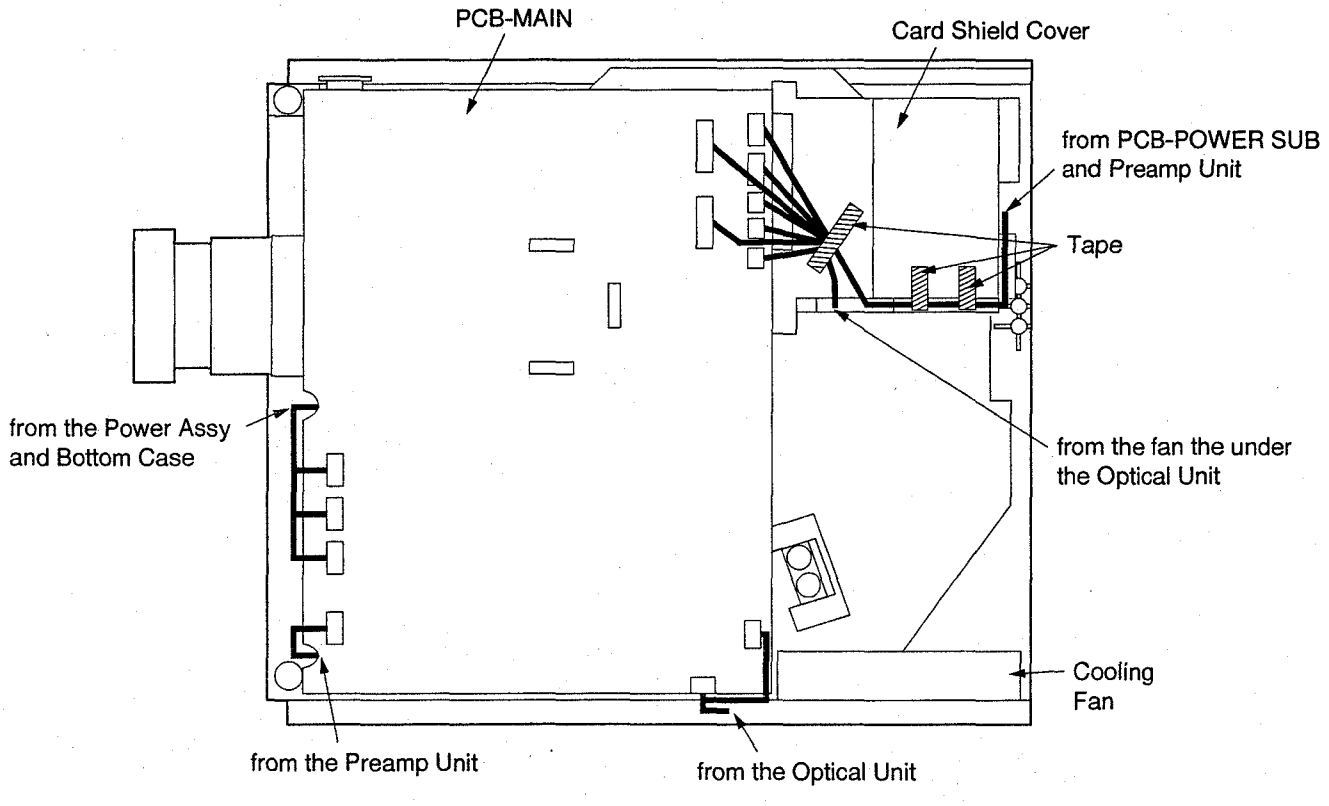

Fig. 3-4

REPLACING THE LAMP BOX

The light source lamp is designed to project the image on the LCD panel. When the light source lamp no longer functions, replace it with a new one to ensure optimum performance.

⚠ Caution:

- Do not remove the light source lamp from inside of this equipment immediately after using the projector, you may get burned because of the high temperature of the light source lamp.
- When you replace the light source lamp, press the power button to power off, then wait for 120 seconds in stand-by mode to cool down the lamp and LCD panels. Turn off the main switch, unplug the power code from the outlet and wait one hour so that the lamp is cool to the touch.
- Do not remove the light source lamp except for replacement. Careless treatment can cause injury or fire.
- Do not touch the lamp directly. It may be broken and may cause you to injure or burn yourself.
- Be sure not to drop the lamp lid screw into the projector. Also be sure also not to insert metal or any flammable objects, it may cause fire or an electric shock. If any objects are inserted, please unplug and contact your dealer.
- Install the lamp securely, failure to do so it may cause a fire.
- **for Service Person**
  Be sure to attach the Top Cover Assy and the Top Case separately to the product after removing the Top Cover Assy from the product to replace the lamp.
  If they are attached together, the explosion-proof shutter may not operate. Do not turn on the product in such condition, or the lamp may explode.

1. Loosen the screw of the lamp lid on the top cover using a screwdriver (–) , and remove the lid.
   - Remove the lamp cover in the direction of the arrow as indicated.

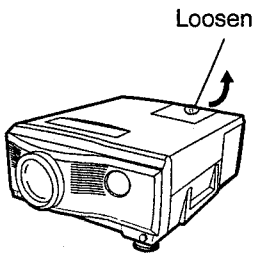

Important:

Be careful not to damage the electric wire connected to this equipment.

2. Loosen a screw (a) of fixing metal using a screwdriver (+), and remove them.
   Do not lose the fixing metal and screws.

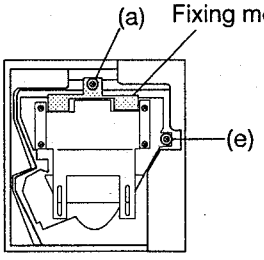

3. Set Lamp exchanging metal into the projector.
   1) Insert metal fittings for lamp replacement in the following positions: on the front face of the lamp (2 positions), between the lamp, and on the bottom edges (4 positions).
   2) Align screw holes (c) with node (d).
   3) Fasten the piece into place using the two screws included (b, b').

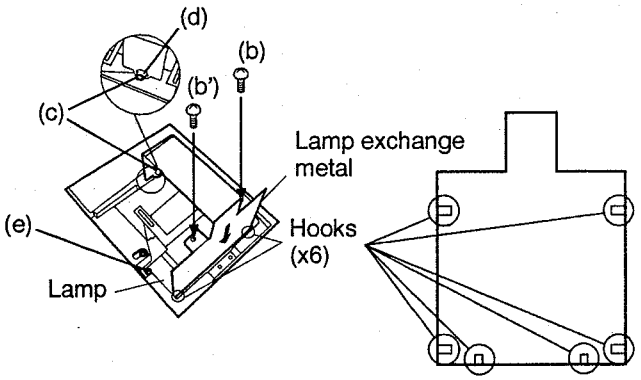

4. Loosen the lamp fixing screw (e) using a screwdriver (+), and remove it.

5. Hold onto the projector by the handle as you pull out the lamp.
   For the lamp you have removed, do not spill liquid on it, place it near flammable objects or where children can touch it. Otherwise, it will cause injury or fire.

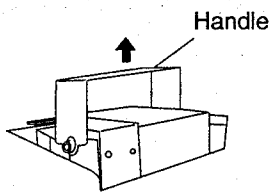

6. Insert the new lamp securely into the projector body in the right direction.

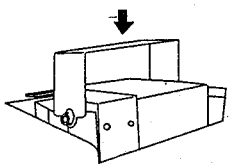

7. Tight up the screws (e) which have been removed in 4 using a screwdriver (+).

8. Loosen the two screws (f), (f') of lamp exchanging metal using a screwdriver, and remove them with the metal.

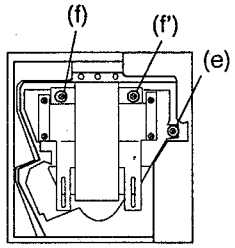

9. Remove the holes from the lamp replacement metal fittings (c) from the node (d).

10. Insert the fixed metal pieces from step 2 into the screw holes (f) and (f'), and use one screw (a) to hold the piece in place.

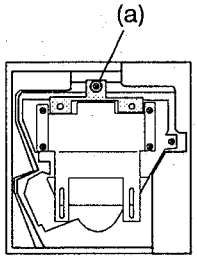

ENGLISH

ENGLISH

11. Tighten up the screw of the lamp lid using a screwdriver (–).

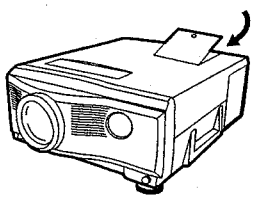

How to reset the operation time meter
Plug in the power cord, switch on the projector and reset lamp time by pressing the < , > and POWER buttons simultaneously.

- Lamp cannot be removed from the projector unless setting the lamp exchanging metal.
- If you do not have the lamp exchanging metal, remove the metal from the new lamp and use it. Do not touch the lamp directly. It may be broken and may cause you to injure or burn or yourself.

⚠ Caution:
- For the lamp you have removed, do not spill liquid on it, place it near flammable objects or where children can touch it. Otherwise, it will cause injury or fire.
- Be sure that the projector guide is firmly inserted between the right and left lamp guides.
  Do not touch the lamp directly, place a cloth over the replacement lamp.

Important:
- The projector will not turn on if you do not secure the lamp lid.
- The operation time meter must be reset after the lamp has been replaced.
- Do not reset the operation time meter unless the lamp has been replaced.

The life of the lamp
The average life of the lamp for the projector is about 1,000 hours of consecutive use. Life span may differ according to operating environment, and may be shorter than 1000 hours. Decreases in luminescence and/or color brightness will indicate that the light source lamp is in need of replacement. When lamp operation time exceeds 1,000 hours, the indicator will flash alternately between green and red (while the lamp is in operation; when the lamp is not in operation, the indicator will appear red only). When the lamp has been used for about 1,250 hours, the message "LAMP!!." will appear on the screen. When the lamp has been used for about 1,300 hours, the projector will automatically shut off for the safety of the lamp and the power indicator light up in red. The projector cannot be used until the lamp has been replaced.

⚠ Caution:
- The light source lamp is fragile. Be careful not to cut yourself with the fragments.
- The lamp life depends on the environment. For replacement lamps, please contact your dealer.

The projector automatically shuts off when the lamp is used up in about 1,300 hours and not used until lamp replacement.

LENS FOCUS TRACKING ADJUSTMENT

After replacing the Lens Unit or the LCD Block, make this adjustment.
Fix the Lens Unit to optimize focus when zoomed out and in to the full.

1. Loosen the four screws securing the Lens Unit. Place the screws around the center of the screw holes (elliptical).
2. Press the FOCUS/ZOOM button to indicate "ZOOM" on the screen.
3. Press the "ADJUST +" button to fully zoom out (to the smallest image).
4. Optimize the focus of the pixels on the screen.
5. Indicate the "ZOOM" on the screen. Press the "ADJUST –" button to fully zoom in (to the largest image).
6. Insert a minus screwdriver (equivalent to a 0.24 X 4 inch size) into the triangular hole for track adjustment. Turn the screwdriver to optimize the focus of the pixels on the screen. The Lens Unit moves forward and backward by turning the screwdriver.
7. Indicate the "ZOOM" on the screen. Press the "ADJUST +" button to fully zoom out.
8. Observe the focus. When the focus is optimized, this adjustment is completed. If not, make this adjustment again from the step 4.
9. Tighten the four screws. (screw torque 14±2kgf·m)

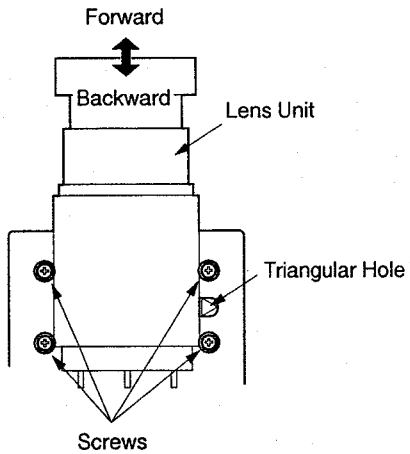

Optical Unit

ELECTRICAL ADJUSTMENTS

Use communication program [Hyper Terminal] of Microsoft® Windows® 95 Operating system for every circuit adjustment of this product.

❑Necessary Equipment and Connecting

Connect the following equipment as shown in the right figure.

- LVP-X200E
- Personal Computer (with Microsoft® Windows® 95 Operating System)
- RS-232C Cable
- XGA Signal Generator (Equivalent to VG-814)
- NTSC Signal Generator
- PAL Signal Generator
- Monitor for Personal Computer

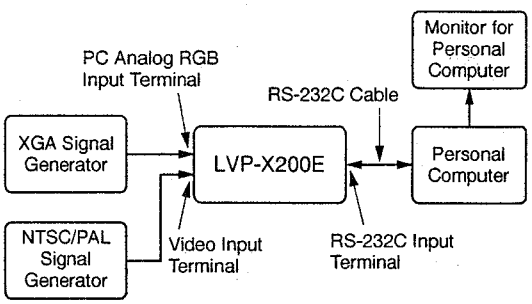

❑Test Signal

1. NTSC colour bar signal (Composite)
2. PAL colour bar signal (Composite)
3. XGA signal (Horizontal frequency 60Hz)
   The timing and patterns for the adjustment are as follows :

H Timing

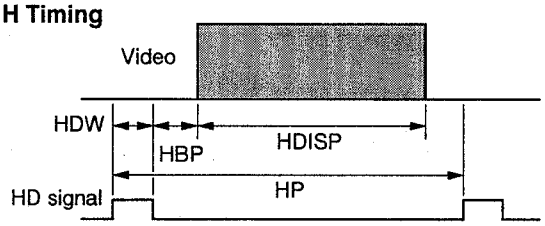

V Timing

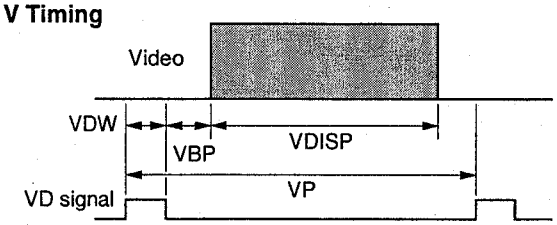

Program ROM : LC6 Ver. 1.1

Program No.	Pattern
01	White Raster 100%
12	White Raster 50%
15	Every other Horizontal Line (Red)
16	Every other Horizontal Line (Green)
17	Every other Horizontal Line (Blue)
35	SMTPE (Red)
36	SMTPE (Green)
37	SMTPE (Blue)

Timing of XGA signal (Horizontal Frequency 60Hz)

DOT-CLOCK [MHz]	65.0	VP [H]	806
HP [DOT]	1344	VDISP [H]	768
HDISP [DOT]	1024	VDW [H]	6
HDW [DOT]	136	VBP [H]	29
HBP [DOT]	160	Interlace	—
		Signal Polarity	HD : –, VD : –

ENGLISH

❑Adjustment with Microsoft® Windows® 95 Operating System

1. Starting

1. Start Windows® 95.
2. Double click [Accessories] holder.
3. Double click [Hyper Terminal] holder.
4. Double click [HyperTrm] icon.

2. Hyper Terminal Setting

1. Click [Properties] in File menu on the Hyper Terminal window.
   [Connection Properties] window will open.
   Set as follows on this window.
2. Click [Connecting] in communication menu on the window to connect LVP-X200E.

Item		Setting
Comm. Port		Port (COM1-COM4)
Port setting	: Bit/sec	9600
	: Data bit	8 bit
	: Parity	None
	: Stop bit	1
	: Flow control	None
Setting	: Emulation	VT100
ASCII setting	: Sending ASCII	Put a line feed character at the end of the line Local echo Delay (Line) : 1000msec. Delay (Character) : 10msec.
	: Receiving ASCII	Put a line feed character at the end of received data

3. Adjustment

Enter the adjustment command and the adjustment value on the Hyper Terminal window in capitals with keyboard and press the enter key.

4. Writing Adjustment Value

Enter the writing command and the adjustment value on the Hyper Terminal window in capitals with keyboard and press the enter key.

Note: This operation is not necessary for adjustment 2 (Clamp Level), and 3 (A/D Convertor) of automatic adjustment.

5. Close Window

Click the closing button placed upper right of the window to close the Hyper Terminal.
Close Windows® 95 after closing all opening windows.

Adjustment Procedures

[Lamp Power Circuit] 1. Power of Lamp Power Source	**Adjustment purpose**	To set the power supplied to the lamp at the proper value.
	Symptom when incorrectly adjusted	The lamp doesn't burn at the specified brightness, or the lamp may explode.

Measuring instrument	Ammeter, Voltmeter
Test point	Lamp power output
EXT trigger	----
Measurement range	----
Input signal	----
Input terminal	----

*Finish this adjustment within 1 minute after turning on the product.

1. Remove the lamp box and the main shield cover from the product.
2. Connect an ammeter, a voltmeter and a dummy load resistance (non-inductive resistance 12Ω 350W) with the lamp power output as shown in the figure.
3. Turn on the product.
4. Adjust VR9V0 (PCB-LAMP POWER) so that the output is 338±2W (Voltage 64V, Current 5.28A, to be in the range shown in the following table and graph) Adjust VR9V0 using the adjustment hole on the PCB-MAIN.

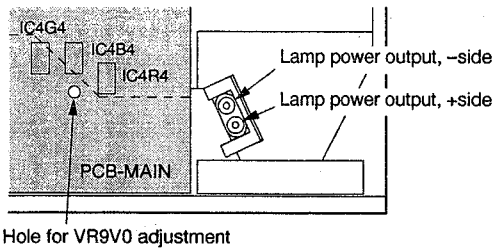

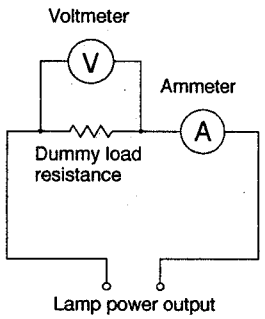

Measuring instruments connection

Adjustment Summary Table

Voltage V	Current A (max)	Current A (min)
63.60	5.35	5.28
63.65	5.34	5.28
63.70	5.34	5.27
63.75	5.33	5.27
63.80	5.33	2.27
63.85	5.32	5.26
63.90	5.32	5.26
63.95	5.32	5.25
64.00	5.31	5.25
64.05	5.31	5.25
64.10	5.30	5.24
64.15	5.30	5.24
64.20	5.30	5.23
64.25	5.29	5.23
64.30	5.29	5.23
64.35	5.28	5.22
64.40	5.28	5.22
64.45	5.28	5.21
64.50	5.27	5.21
64.55	5.27	5.21
64.60	5.26	5.20

Lamp Power Adjustment Range

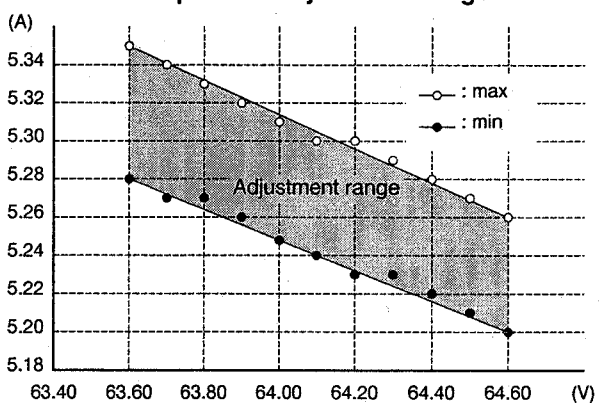

ENGLISH

ENGLISH

[A/D Pre-Amplification Circuit] 2. Clamp Level	**Adjustment purpose**	To set DC level of a picture signal to be entered to A/D converter.
	Symptom when incorrectly adjusted	Monochrome picture has a colour tint.

Measuring instrument	—
Test point	—
EXT trigger	—
Measurement range	—
Input signal	XGA signal (White 100%, No. 01)
Input terminal	Analog RGB input terminal

* Enter the adjustment command with capital alphanumeric characters.

1. Connect LVP-X200E with a personal computer (with Microsoft® Windows® 95 Operating System). (Refer to the figure on P.11)
2. Start Microsoft® Windows® 95 in the personal computer.
3. Start the communication program [Hyper Terminal] in Microsoft® Windows® 95 to open the window. (For setting, refer to Hyper Terminal setting on P.12)
4. Reset the normal mode on the main menu of this product.

RGB

5. Supply an XGA signal (White 100%, No. 01).
6. Enter [00~70] (RGB input clamp adjustment command) to the Hyper Terminal window and automatic adjustment will start.
7. The return command [00~70111] is displayed on the Hyper Terminal Window after the adjustment.
   The last 3 figures of the return command indicate the result of adjustment and each figure corresponds to R, G, and B. in order. The figure, 1 means that the adjustment has been successful. The figure, 0 means that the adjustment has been failed caused by faults on PCBs, wrong signals or wrong input selection.

VIDEO

8. Supply an NTSC signal (colour bar) to the video input terminal.
9. Enter [00~71] (VIDEO input clamp adjustment command) to the Hyper Terminal window and automatic adjustment will start.
10. The return command [00~7111] is displayed on the Hyper Terminal Window after the adjustment.
    The last 2 figures of the return command indicate the adjustment result and each figure corresponds to R-Y and B-Y. The figure, 1 means the adjustment has been successful. The figure, 0 means that the adjustment has been failed caused by faults on PCBs, wrong signals or wrong input selection.

[A/D Pre-Amplification Circuit] 3. A/D Convertor	**Adjustment purpose**	To set amplitude of a video signal to be entered to A/D converter.
	Symptom when incorrectly adjusted	Monochrome picture has a colour tint.

Measuring instrument	---
Test point	---
EXT trigger	---
Measurement range	---
Input signal	XGA signal (White 100%, No. 01)
Input terminal	Analog RGB input terminal

* Enter the adjustment command with capital alphanumeric characters.

1. Connect LVP-X200E with a personal computer (with Microsoft® Windows® 95 Operating System). (Refer to the figure on P.11)
2. Start Microsoft® Windows® 95 in the personal computer.
3. Start the communication program [Hyper Terminal] in Microsoft® Windows® 95 to open the window. (For setting, refer to Hyper Terminal setting on P.12)
4. Reset the normal mode on the main menu of this product.
5. Supply an XGA signal (White 100%, No. 01).
6. Enter [00~5] (A/D adjustment command) to the Hyper Terminal window and automatic adjustment will start.
7. The return command [00~5111] is displayed on the Hyper Terminal Window after the adjustment.
   The last 3 figures of the return command indicate the result of adjustment and each figure corresponds to R, G, and B. in order. The figure, 1 means that the adjustment has been successful. The figure, 0 means that the adjustment has been failed caused by faults on PCBs, wrong signals or wrong input selection.

ENGLISH

ENGLISH

[Liquid Crystal Panel Driving Adjustment Circuit] 4. Ghost	**Adjustment purpose**	To remove ghosts from the screen.
	Symptom when incorrectly adjusted	Ghosts appear every 12 picture elements.

Measuring instrument	—
Test point	—
EXT trigger	—
Measurement range	—
Input signal	XGA signal (SMTPE(R), No. 35)
Input terminal	Analog RGB input terminal

* Make this adjustment only when ghosts remarkably appear on the screen.
* Enter the adjustment command with capital alphanumeric characters.

1. Connect LVP-X200E with a personal computer (with Microsoft® Windows® 95 Operating System). (Refer to the figure on P.11)
2. Start Microsoft® Windows® 95 in the personal computer.
3. Start the communication program [Hyper Terminal] in Microsoft® Windows® 95 to open the window. (For setting, refer to Hyper Terminal setting on P.12)
4. Reset the normal mode on the main menu of this product.
5. Project pictures onto the screen.

Red

6. Supply an XGA signal (SMTPE(R), No. 35).
7. Operate the signal source to be projected in red monochrome on the screen.
8. Enter the adjustment command [00~3123 □□] to the Hyper Terminal window to minimise the red ghosts. Enter [99], [AA], [BB], [CC] or [DD] to □□ for minimum ghosts. [BB] has been written at □□ before adjustment.
   (*1) When the sent command is displayed, sending is accomplished correctly. The current value can be confirmed by sending the command without entering any value to □□.
9. Enter command for writing [00~1E93 □□] to the Hyper Terminal window and write the changed value onto the EEPROM.
   Enter the value of step 8 to □□. (*1)

Green

10. Supply an XGA signal (SMTPE(G), No. 36).
11. Operate the signal source to be projected in green monochrome on the screen.
12. Enter the adjustment command [00~3223 □□] to the Hyper Terminal window to minimise the green ghosts. Enter [99], [AA], [BB], [CC] or [DD] to □□ for minimum ghosts. [BB] has been written at □□ before adjustment. (*1)
13. Enter command for writing [00~1EAA □□] to the Hyper Terminal window and write the changed value onto the EEPROM.
    Enter the value of step 12 to □□. (*1)

Blue

14. Supply an XGA signal (SMTPE(B), No. 37).
15. Operate the signal source to be projected in blue monochrome on the screen.
16. Enter the adjustment command [00~3323 □□] to the Hyper Terminal window to minimise the blue ghosts. Enter [99], [AA], [BB], [CC] or [DD] to □□ for minimum ghosts. [BB] has been written at □□ before adjustment. (*1)
17. Enter command for writing [00~1EC1 □□] to the Hyper Terminal window and write the changed value onto the EEPROM.
    Enter the value of step 16 to □□. (*1)

[Liquid Crystal Panel Driving Adjustment Circuit] 5. Vertical Line	**Adjustment purpose** To remove vertical lines form the screen. **Symptom when incorrectly adjusted** Vertical lines appear every 12 picture elements.

Measuring instrument	—
Test point	—
EXT trigger	—
Measurement range	—
Input signal	XGA signal (White 50%, No. 12)
Input terminal	Analog RGB input terminal

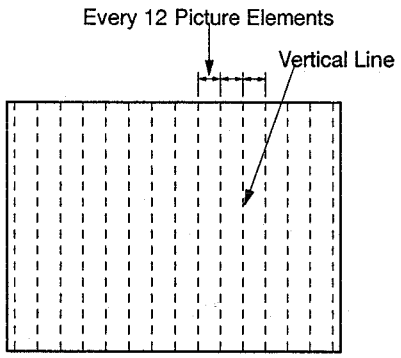

* Make this adjustment only when vertical lines remarkably appear on the screen.
* Enter the adjustment command with capital alphanumeric characters.

1. Connect LVP-X200E with a personal computer (with Microsoft® Windows® 95 Operating System). (Refer to the figure on P.11)
2. Start Microsoft® Windows® 95 in the personal computer.
3. Start the communication program [Hyper Terminal] in Microsoft® Windows® 95 to open the window. (For setting, refer to Hyper Terminal setting on P.12)
4. Reset the normal mode on the main menu of this product.
5. Supply an XGA signal (White 50%, No. 12).
6. Project pictures onto the screen.
7. Enter the adjustment command [00~227 □□] to the Hyper Terminal window to minimise vertical lines. Enter any value from [10h] to [FFh] to □□ for minimum vertical lines. [10h] has been written at □□ before adjustment.
   (*1) When the sent command is displayed, sending is accomplished correctly. The current value can be confirmed by sending the command without entering any value to □□.
8. Enter command for writing [00~1F2B □□] to the Hyper Terminal window and write the changed value onto the EEPROM.
   Enter the value of step 7 to □□. (*1)

ENGLISH

ENGLISH

[Liquid Crystal Panel Driving Adjustment Circuit] 6. Flicker	**Adjustment purpose**	To remove flickers form the screen.
	Symptom when incorrectly adjusted	Flickers appear.

Measuring instrument	---
Test point	---
EXT trigger	---
Measurement range	---
Input signal	XGA signal (Horizontal line every other red picture element, No. 15)
Input terminal	Analog RGB input terminal

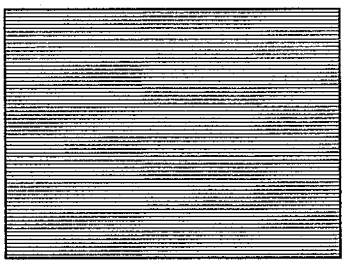

Horizontal Line Every other Picture Element Pattern

* Make this adjustment only when flickers remarkably appear on the screen.
* Enter the adjustment command with capital alphanumeric characters.

1. Connect LVP-X200E with a personal computer (with Microsoft® Windows® 95 Operating System). (Refer to the figure on P.11)
2. Start Microsoft® Windows® 95 in the personal computer.
3. Start the communication program [Hyper Terminal] in Microsoft® Windows® 95 to open the window. (For setting, refer to Hyper Terminal setting on P.12)
4. Reset the normal mode on the main menu of this product.

Red

5. Supply an XGA signal (Horizontal line every other red picture element, No. 15).
6. Project pictures onto the screen.
7. Enter the adjustment command [00~229□□] to the Hyper Terminal window to minimise the red flickers. Enter any value from [00h] to [FFh] to □□ for minimum flickers. [A0h] has been written at □□ before adjustment.
   (*1) When the sent command is displayed, sending is accomplished correctly. The current value can be confirmed by sending the command without entering any value to □□.
8. Enter command for writing [00~1F2D□□] to the Hyper Terminal window and write the changed value onto the EEPROM.
   Enter the value of step 7 to □□. (*1)

Green

9. Supply an XGA signal (Horizontal line every other green picture element, No. 16).
10. Enter the adjustment command [00~22A□□] to the Hyper Terminal window to minimise the green flickers. Enter any value from [00h] to [FFh] to □□ for minimum flickers. [A0h] has been written at □□ before adjustment. (*1)
11. Enter command for writing [00~1F2E□□] to the Hyper Terminal window and write the changed value onto the EEPROM.
    Enter the value of step 10 to □□. (*1)

Blue

12. Supply an XGA signal (Horizontal line every other blue picture element, No. 17).
13. Enter the adjustment command [00~22B□□] to the Hyper Terminal window to minimise the blue flickers. Enter any value from [00h] to [FFh] to □□ for minimum flickers. [A0h] has been written at □□ before adjustment. (*1)
14. Enter command for writing [00~1F2F□□] to the Hyper Terminal window and write the changed value onto the EEPROM.
    Enter the value of step 13 to □□. (*1)

LED ERROR INDICATION

This product is provided with the self-diagnosis function. In case of any abnormality, the LED at the top of the product will indicate the errors.

Diagnosis method : Every time the main power is turned on, the SW is turned on and each sensor is checked for any errors in 4 seconds. The POWER LED remains red during the check.

Diagnosis result indication : LED indication and failures are shown in the following table. LED can be reset "automatically" or "by turning on/off of the main power" when the fault detection is finished.

Forced power-on : When the product can't be turned on because of STBY power short or SW power short, press the 3 buttons of RGB, VIDEO and CARD at the top of the product simultaneously during 4 seconds of the sensor check to turn on the product for fault detection. In this case, protection circuits except for STBY power short and SW power short will operate.

ENGLISH

LED Error Indication List

Preferential order	Failure	Symptom	Purpose	LED Indication					Reset
				POWER	LAMP	TEMP	CARD1	CARD2	
1	STBY power short	No power-on	Fault Detection	Red/Green alternately	Orange	Red flash 2	*	*	Main Power
2	SW power short	No power-on	Fault Detection	Red/Green alternately	Orange	Red flash	*	*	Main Power
3	Fan stops (Optical unit)	No power-on	Fault Detection	Red/Green alternately	Red	Red flash 3	*	*	Main Power
4	Fan stops (Exhaustion)	No power-on	Fault Detection	Red/Green alternately	Red	Red flash 2	*	*	Main Power
5	Fan stops (Intake)	No power-on	Fault Detection	Red/Green alternately	Red	Red flash	*	*	Main Power
6	Fan stops (Power)	No power-on	Fault Detection	Red/Green alternately	Red	Red flash 4	*	*	Main Power
7	LBOX open	No power-on	Danger Prevention	Red/Green alternately	–	–	*	*	Auto
8	FBOX open	No power-on	Dust Intake Prevention	Red/Green alternately	–	–	*	*	Auto
9	Unplugged thermistor (Exhaustion)	No power-on	Fault Detection	Red/Green alternately	–	Red flash	*	*	Auto
10	Unplugged thermistor (Lamp)	No power-on	Fault Detection	Red/Green alternately	–	Red flash 2	*	*	Auto
11	Communication failure between the computers	No power-on	Fault Detection	Red/Green alternately	Orange	Red	*	*	Auto
12	IIC bus failure (EEPROM)	No power-on	Fault Detection	Red/Green alternately	Green	Red flash 2	*	*	Auto
13	IIC bus failure (Decoder)	Inferior display of VIDEO input	Fault Detection	Red/Green alternately	Green	Red flash	*	*	Auto

– : LED off
* : Need no confirmation
Orange : Both Red and Green light
Red flash N: The cycle that Red flashes N times and goes out for fixed time is repeated.

LED Error Indication List

Preferential order	Failure	Symptom	Purpose	LED Indication					Reset
				POWER	LAMP	TEMP	CARD1	CARD2	
14	Temperature sensor (Lamp)	No power-on	Temperature rise	Red	–	Red flash 2	*	*	Auto
15	Temperature sensor (Intake)	No power-on	Temperature rise	Red	–	Red flash	*	*	Auto
16	Temperature sensor (PCB)	No power-on	Temperature rise	Red	–	Red flash 3	*	*	Auto
17	Lamp's life (1000~1300h)	Only warning indication by LED	Warning indication by LED Indication during stand-by	Red	Red flash	–	*	*	Manual
			Warning indication by LED Indication during stand-by	Green	Red/Green alternately	–	*	*	Manual
	Lamp's life (1300h or over)	No power-on	Lamp's life	Red	Red	–	*	*	Manual
18	Lamp doesn't light	No power-on for 1 minute	Lamp protection	Red	Green flash	–	*	*	Auto
19	For 1 minute after power-on	No power-off for 1 minute	Lamp protection	Green	Green flash	–	*	*	Auto
20	For 1 minute after power-off	No power-on for 1 minute	Lamp protection	Red	Green flash	–	*	*	Auto
21	IIC bus failure (HIC)	Inferior display of all inputs	Fault detection	*	*	*	Green flash	Green flash	Auto
22	IIC bus failure (EEPROM)	No power-on	Fault detection	*	*	*	Green flash 2	Green flash 2	Auto

– : LED off
* : Need no confirmation
Orange : Both Red and Green light
Red flash N: The cycle that Red flashes N times and goes out for fixed time is repeated.

TABLE DES MATIERES

SPECIFICATIONS 1
PRECAUTIONS SUR LA SECURITE 1
AVERTISSEMENT 1
VERIFICATION D'UN COURANT DE FUITE 1
EMPLACEMENT DES CARTES DE CIRCUITS IMPRIMES 2
ENLEVEMENT DES ELEMENTS 3
CABLAGE 7
REMPLACEMENT DE LA LAMPE SOURCE DE LUMIERE 9
REGLAGE D'ALIGNEMENT DU FOYER DE L'OBJECTIF 10
REGLAGES ELECTRIQUES 11
Equipement nécessaire et raccordements 11
Signal d'essai 11
Réglage avec le système de fonctionnement de Microsoft® Windows® 95 12
Procédures de mises au point 13
Réglage du circuit d'énergie de la lampe
1. Puissance de réglage de la source d'énergie de la lampe 13
Réglage du circuit de préamplification analogique/numérique 14
2 Réglage du niveau de verrouillage 14
3. Réglage du convertisseur analogique/numérique 15
Réglage du circuit du réglage de commande du panneau à cristaux liquides 16
4. Réglage d'une image multiple 16
5. Réglage de la linéarité verticale 17
6. Réglage du papillotement 18
INDICATION D'UNE ERREUR DE LA DEL 19
OPTION BOARD INSTALLATION
PARTS LIST
REPACKING PROCEDURE
ELECTRICAL PARTS AND OTHERS
IC BLOCK DIAGRAM
SCHEMATIC DIAGRAM
PRINTED CIRCUIT BOARD PARTS LAYOUT

FRANÇAIS

TRADEMARK, REGISTERED TRADEMARK

Marques commerciales, marques déposées Apple, Macintosh sont des marques déposées de Apple Computer Inc. IBM, VGA, PS/2 sont des marques déposées de International Business Machines Corporation. Microsoft®, Windows® 95, isont des marques déposées de Microsoft Corporation aux U.S.A. et dans les autres pays.
Tous les noms de produits/marques commerciales sont des marques commerciales ou des marques déposées des différents propriétaires.

SPECIFICATIONS

- **Alimentation** : CA 100~240V ; 50 / 60Hz
- **Entrée nominale** : 5,0A
- **Panneaux LCD** : Panneau LCD 1,3": 3 pièces (pour R, G, B)
  Pixels 1024 × 768 = 786 432 pixels
  Total 2 359 269 pixels
  Taux de pixel actifs: 99,99% ou plus (chaque panneau)
- **Objectif de Projection** : F 2,3~2,7 f = 53,3~69,3 mm
- **Lampe source lumineuse** : Lampe à halogénure métallique 330 W
- **Format d'image** : Rapport hauteur/largeur 4:3 40-300"
- **Enceintes** : rondes de 60 mm × 2 pces.
- **Entrée S-vidéo** : Signal de luminance
  1,0 Vc-c 75 ohms (sync. négative)
  Signal de chrominance
  0,286 Vc-c 75 ohms
  (signal de rafales)
- **Entrée vidéo** : 1,0 Vc-c 75 ohms (sync. négative)
- **Entrées audio** : 350mVrms, 10kohms min.
- **Entrées audio du PC** : 350mVrms, 10kohms min.
- **Entrée RGB analogique** : Mini D-SUB 15 broches
  RGB: 0,7Vp-p 75ohms (sync.négative)
  YCbCr: 1,0Vp-p (Y) (sync.négative)
  Cb, Cr: 0,7Vp-p
  HD/CS : niveau TTL (positif)
  VD : niveau TTL (positif)
- **Dimensions extérieures** : 330(L) × 145(H) × 398(P) mm
  Les pattes et objecifs ne sont pas inclus.
- **Poids** : 21,5 lb (9,8kg)
- **Longueur du cordon d'alimentation** : 114 inch (2,9m)

FRANCAIS

- La poids et les dimensions indiqués sont approximatifs.
- La présentation et les données techniques peuvent être sujettes à des modifications sans avertissement.

PRECAUTIONS SUR LA SECURITE

AVIS: Observer toutes les précautions et les mesures de sécurité se rapportant aux notes situées à l'intérieur du boîtier du projecteur et sur le châssis du projecteur.

AVERTISSEMENT

1. Un transformateur de séparation devra être utilisé entre le projecteur et le point d'alimentation C.A. avant d'effectuer n'importe quel essai/entretien sur le châssis du projecteur SOUS TENSION.
2. Le fonctionnement de ce projecteur à l'extérieur du boîtier ou avec le couvercle retiré implique un danger d'électrocution provenant de l'alimentation en courant du projecteur. Un travail sur le projecteur ne devra pas être tenté par quiconque n'est pas parfaitement familiarisé avec les précautions nécessaires devant être prises lorsque l'on travaille sur un équipement à haute tension.
3. Lorsqu'un entretien est nécessaire, observer la disposition initiale des fils. Des précautions supplémentaires devront être prises pour assurer une disposition correcte des fils dans les zones à haute tension. Lorsqu'un court-circuit se produit, remplacer les éléments constitutifs qui mettent en évidence un surchauffage.

VERIFICATION D'UN COURANT DE FUITE

Avant de renvoyer le projecteur au client, il est conseillé qu'un courant de fuite soit mesuré selon les méthodes suivantes.
Avec la fiche C.A. retirée de la source C.A., placer une jarretière à travers les deux ergots de la fiche C.A. Mettre en marche le courant secteur du projecteur. En utilisant un détecteur d'isolement, raccorder un fil à la fiche C.A. interconnectée et faire toucher l'autre fil à chaque pièce métallique exposée (têtes de vis, etc.), plus particulièrement les pièces métalliques exposées ayant un circuit de retour au châssis. Les pièces métalliques exposées ayant un circuit de retour au châssis devront présenter une lecture de résistance minimum de 4 mégohms. Toute résistance au-dessous de cette valeur indique une anormalité qui nécessitera une intervention corrective.

EMPLACEMENT DES CARTES DE CIRCUITS IMPRIMES

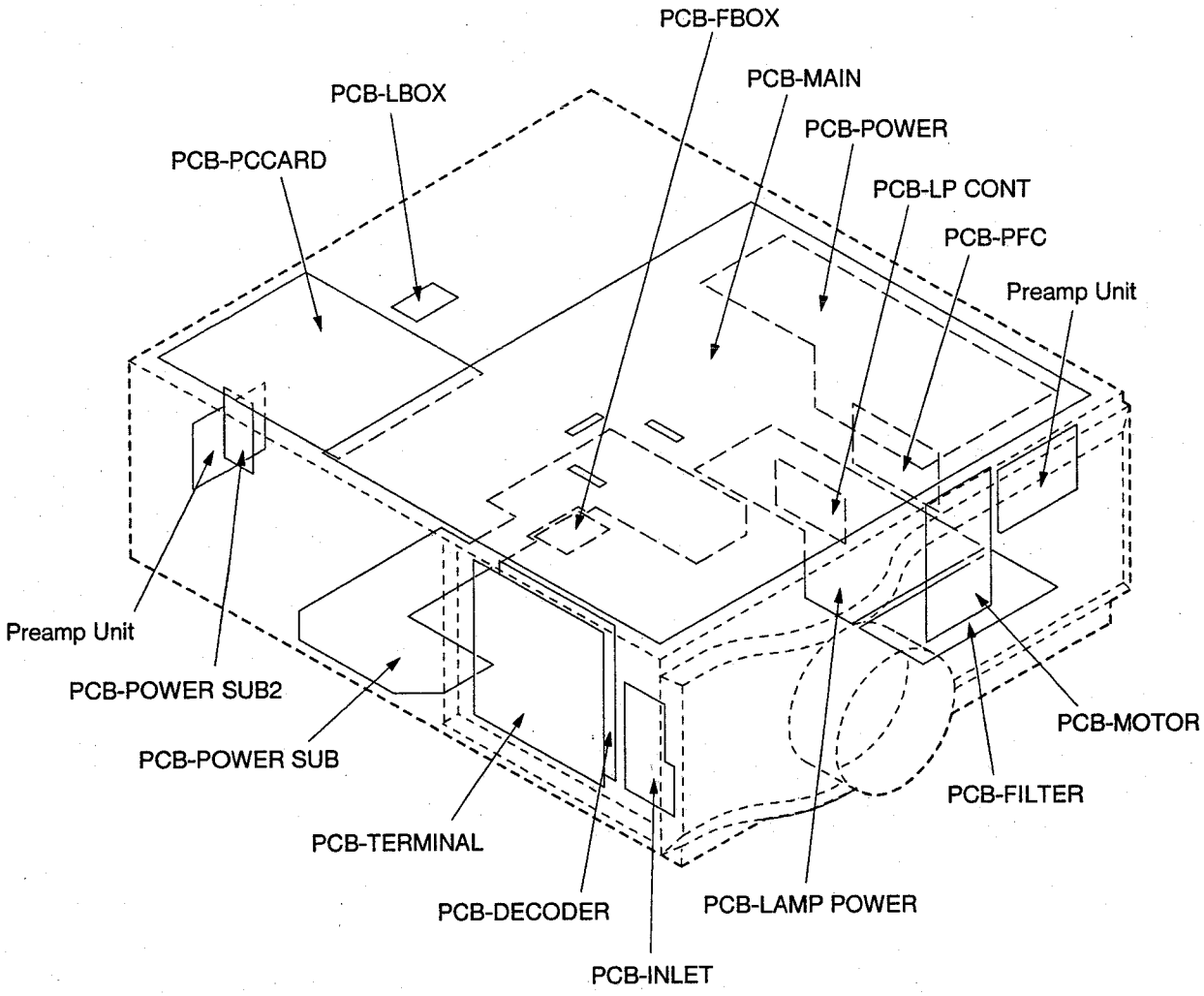

Fig. 1

ENLEVEMENT DES ELEMENTS

Se référer à la LISTE DES PIECES pour les numéros des pièces.

Note: S'assurer de fixer séparément le Top Cover Assy et le Top Case au produit. S'ils sont fixés ensemble, l'obturateur antidéflagrant risque de ne pas fonctionner. Ne pas mettre en marche l'appareil dans une telle condition, sinon la lampe risque d'exploser.

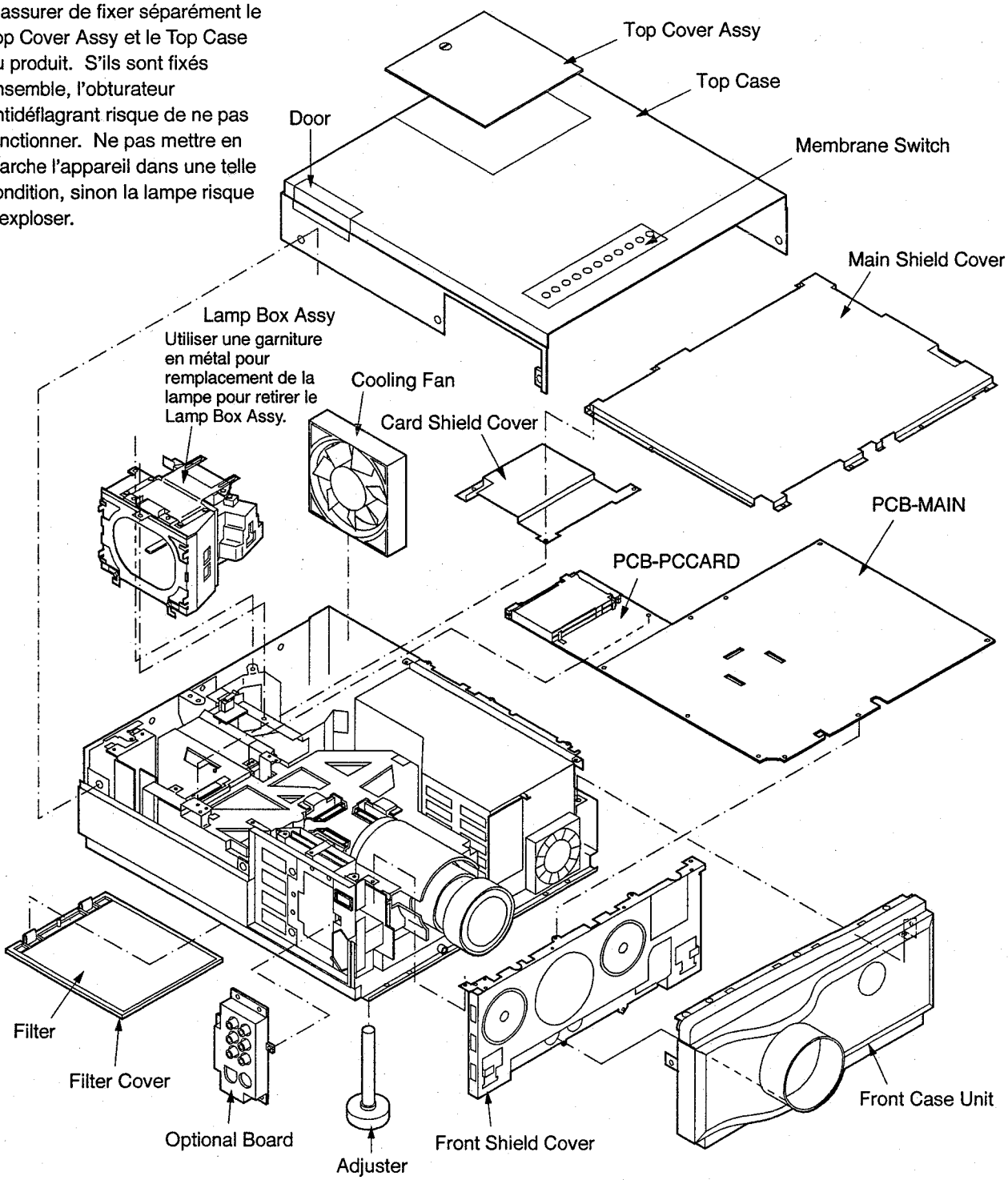

Fig. 2-1

Nom des pièces	Nombre de vis
Optional Board	6
Top Case	8
Top Cover Assy	1
Lamp Box Assy	2
Front Case Unit	3
Main Shield Cover	11

Nom des pièces	Nombre de vis
Card Shield Cover	3
PCB-MAIN	8
PCB-PCCARD	4
Front Shield Cover	5
Filter Cover	(2 Crochets)

Nombre de vis: Nombre de vis maintenant les pièces.

Tableau 1-1

Se référer à la LISTE DES PIECES pour les numéros des pièces.

Note: Pendant le fonctionnement, on devra se protéger de l'électricité statique provenant de LCD en enfilant une bande sur les poignets.

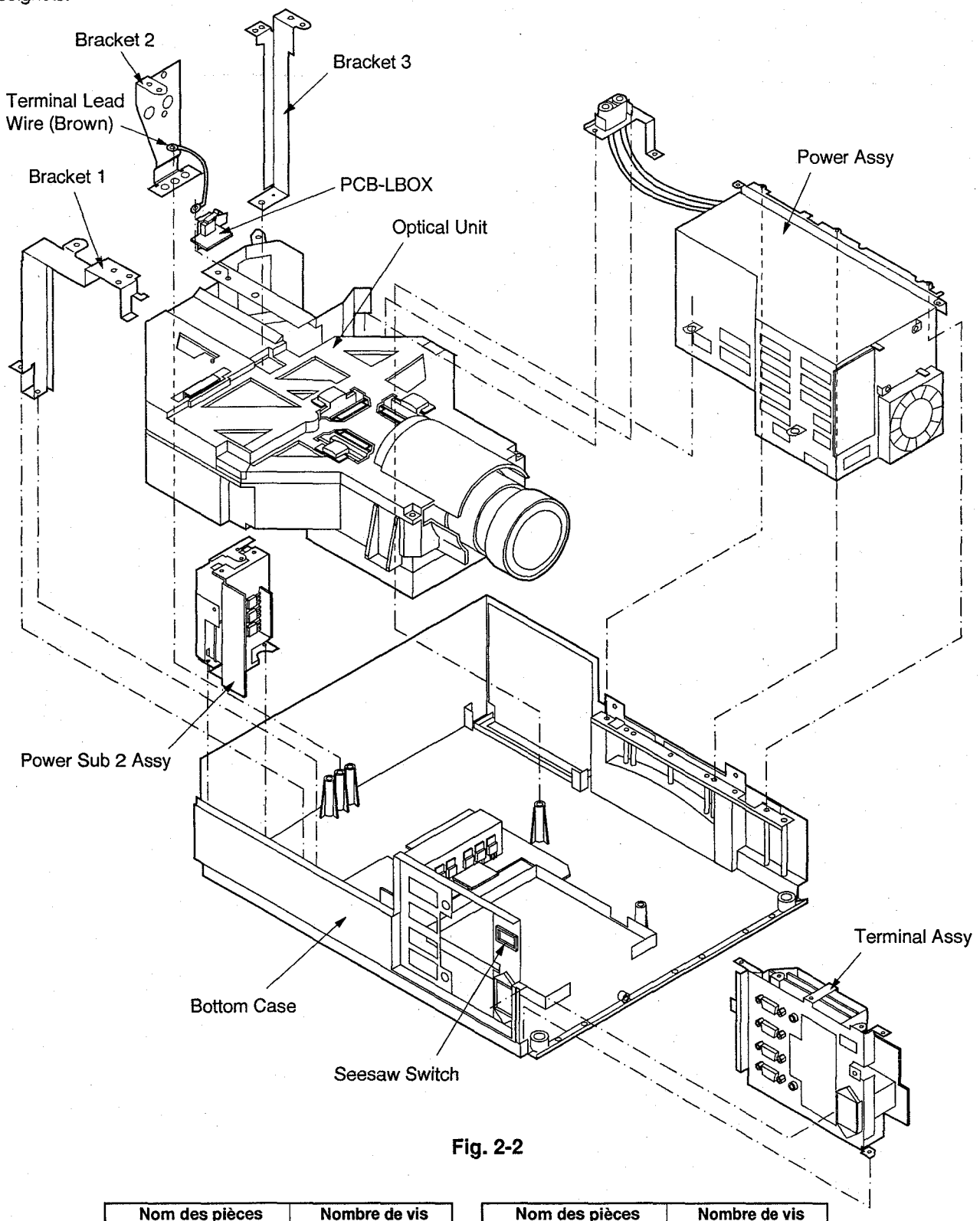

Fig. 2-2

Nom des pièces	Nombre de vis
Power Assy	7
Bracket 1	2
Bracket 2	1
Bracket 3	1

Nom des pièces	Nombre de vis
PCB-LBOX	2
Optical Unit	3
Power Sub 2 Assy	2
Terminal Assy	6

Nombre de vis: Nombre de vis maintenant les pièces.

Tableau 1-2

Se référer à la LISTE DES PIECES pour les numéros des pièces.

Note: Pendant le fonctionnement, on devra se protéger de l'électricité statique provenant de LCD en enfilant une bande sur les poignets.

Pièces de l'ensemble 2 Power Sub

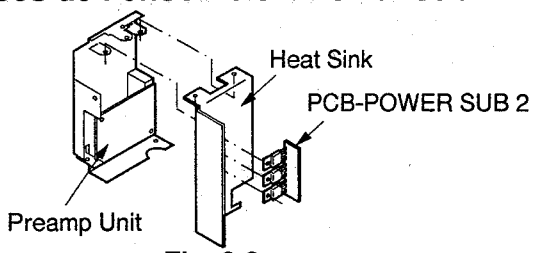

Fig. 2-3

Nom des pièces	Nombre de vis
PCB-POWER SUB 2	3
Heat Sink	2
PREAMP UNIT	2

Tableau 1-3

Pièces de Terminal Assy

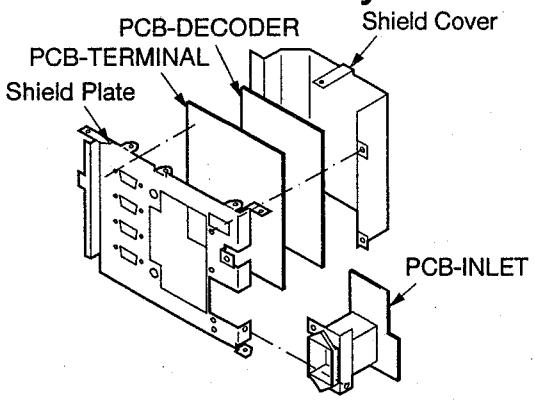

Fig. 2-4

Nom des pièces	Nombre de vis
Shield Cover	7
PCB-DECODER	(4 Crochets)
PCB-TERMINAL	10
PCB-INLET	3

Tableau 1-4

Pièces de Power Assy

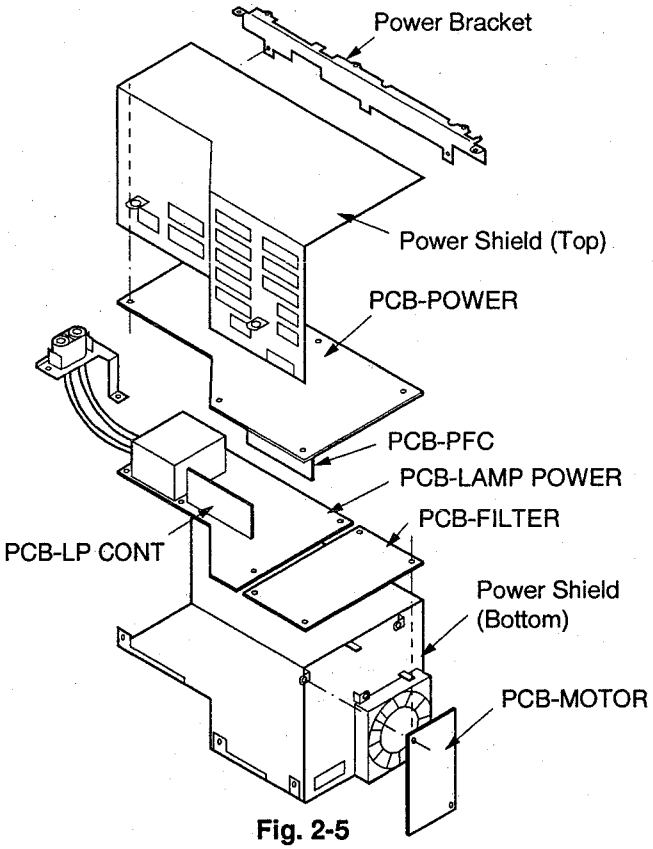

Fig. 2-5

Nom des pièces	Nombre de vis
Power Bracket	2
Power Shield (Top)	5
PCB-POWER	1 (5 Crochets)
PCB-PFC	aucune
PCB-LAMP POWER	(4 Crochets)
PCB-MOTOR	2
PCB-FILTER	1 (3 Crochets)
PCB-LP CONT	aucune

Tableau 1-5

Pièces du Bottom Case

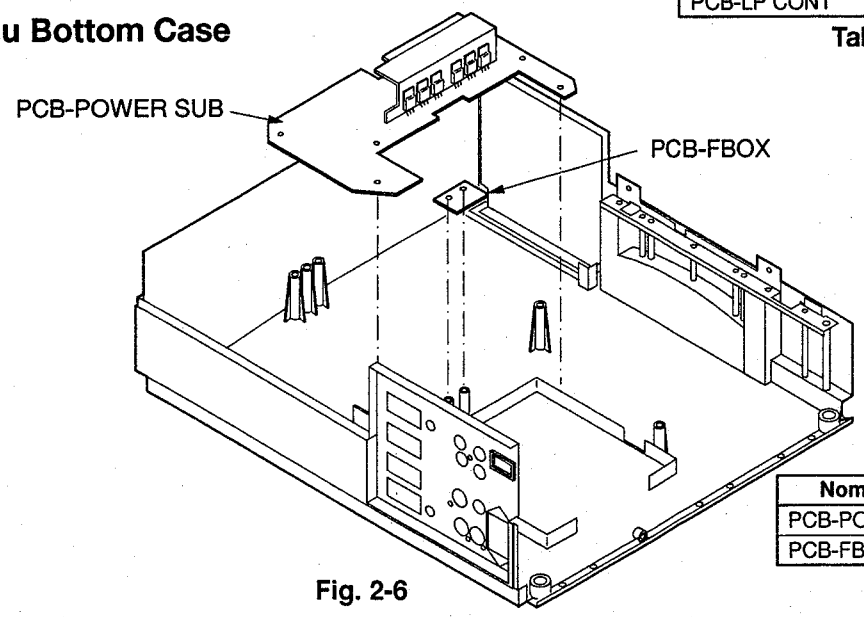

Fig. 2-6

Nom des pièces	Nombre de vis
PCB-POWER SUB	6
PCB-FBOX	2

Tableau 1-6

FRANCAIS

Pièces de Optical Unit

Se référer à la LISTE DES PIECES pour les numéros des pièces.
* Après le remplacement de Lens Unit ou de LCD Block, effectuer un réglage d'alignement du foyer de l'objectif.

Note: Pendant le fonctionnement, on devra se protéger de l'électricité statique provenant de LCD en enfilant une bande sur les poignets.

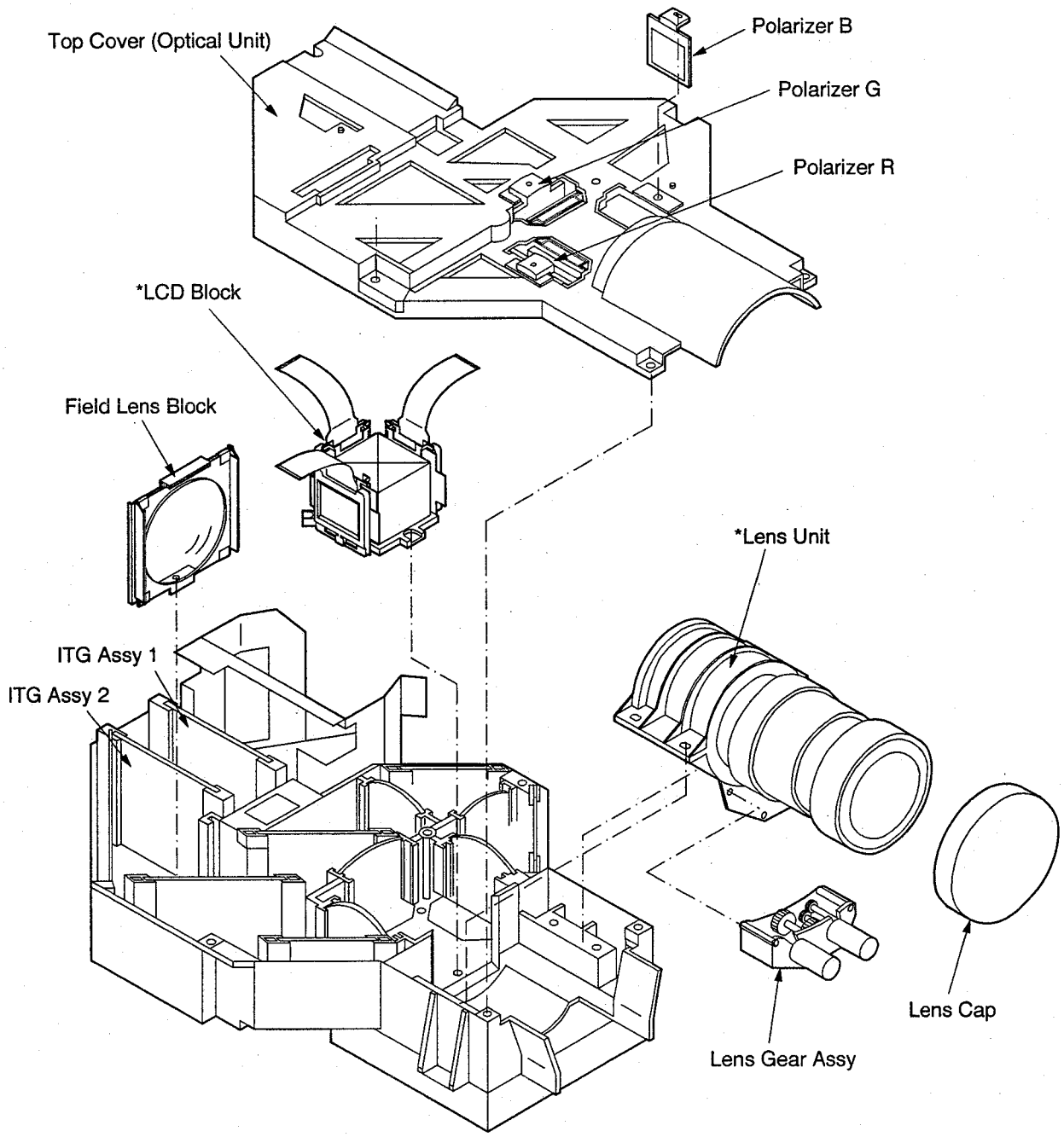

Fig. 2-7

Nom des pièces	Nombre de vis
Top Cover (Optical Unit)	6
Polarizer R	1
Polarizer G	1
Polarizer B	1

Nom des pièces	Nombre de vis
LCD Block	3
Field Lens Block	1
Lens Unit	4
Lens Gear Assy	3

Nombre de vis: Nombre de vis maintenant les pièces.

Tableau 1-7

CABLAGE

Note: 1. Les fils internes sont attachés de telle sort qu'ils ne viennent pas à proximité de pièces à haute tension ou produisant de la chaleur. Après l'entretien, acheminer tous les fils dans leur position originale.
2. Pendant le fonctionnement, on devra se protéger de l'électricité statique provenant de LCD en enfilant une bande sur les poignets.

1. Fixer les fils d'amenée le long de la zone de serrage* montrée dans la figure ci-dessous.
* La zone de serrage indique l'acheminement des fils d'amenée.

———	Zone de serrage*
·····	Zone de serrage cachée*

Câblage avant que Optical Unit ne soit installé

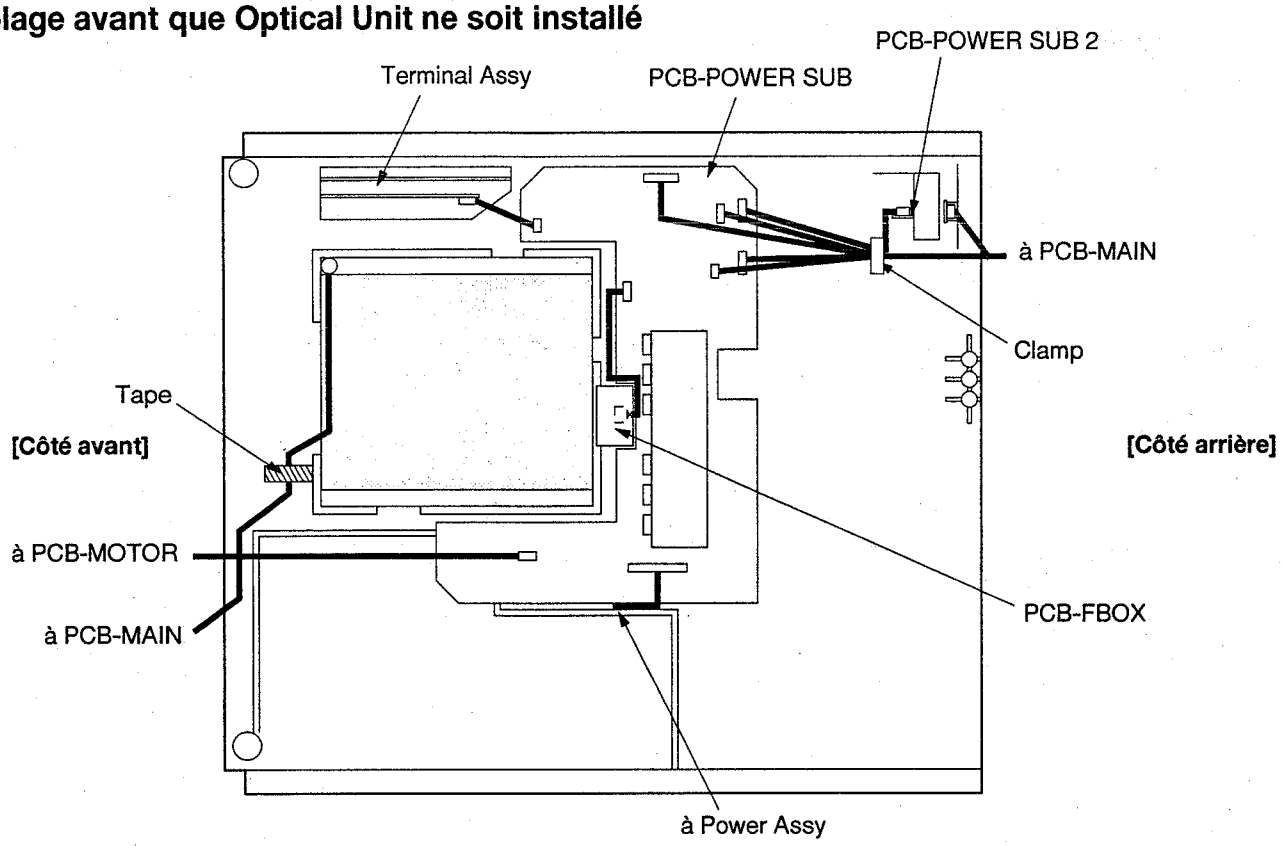

Fig. 3-1

Câblage lorsque Optical Unit et Power Assy sont installés

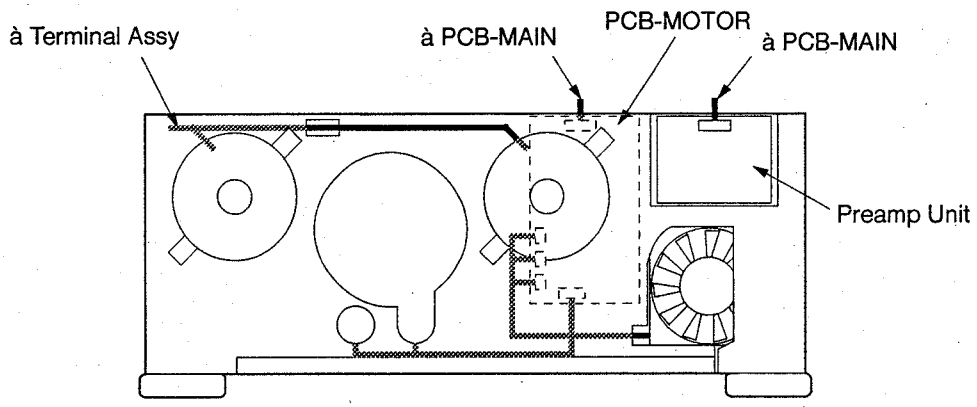

Fig. 3-2

FRANÇAIS

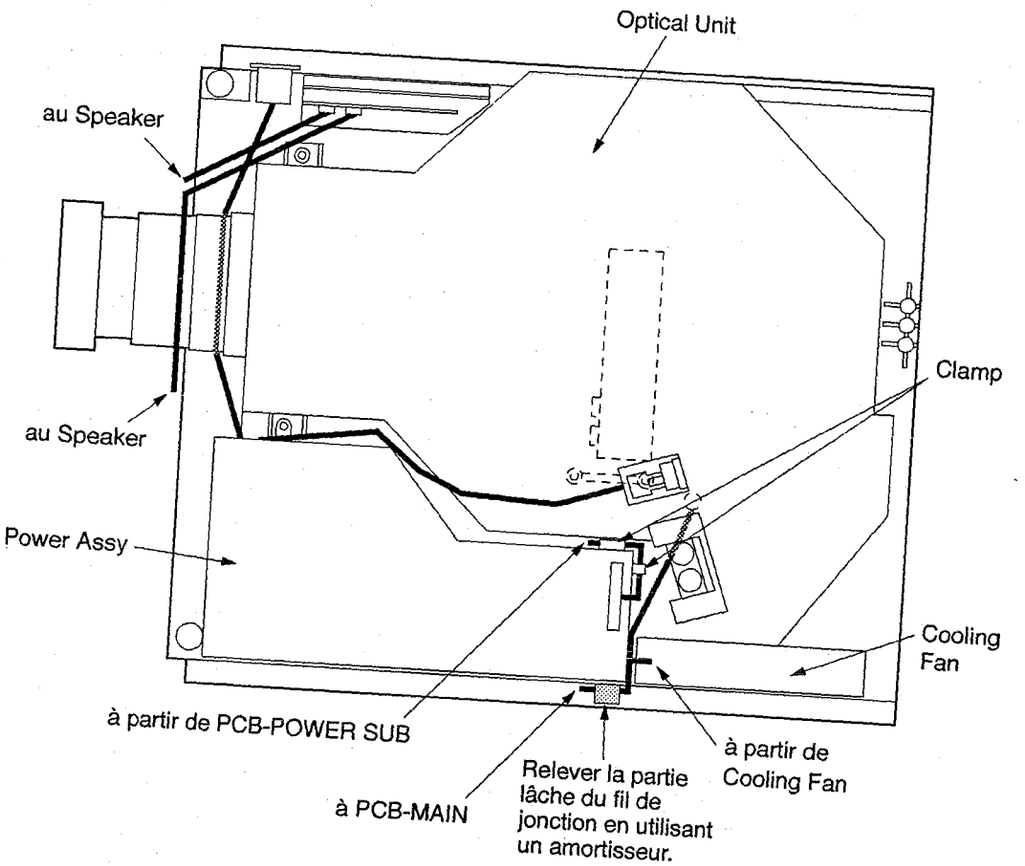

Fig. 3-3

Câblage lorsque PCB-MAIN et Card Shield Cover sont installés

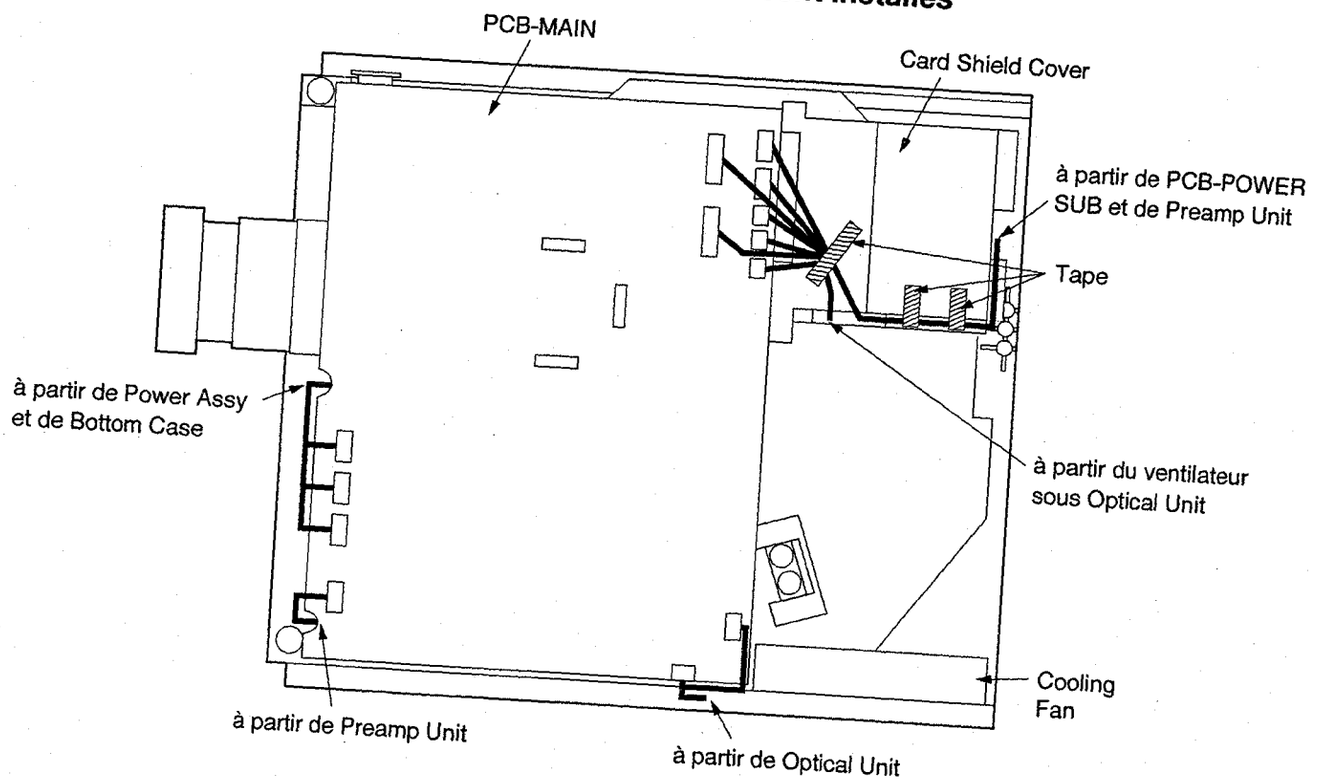

Fig. 3-4

REMPLACEMENT DE LA LAMPE SOURCE DE LUMIERE

La lampe source de lumière est intégrée dans cet appareil pour projeter l'image sur le panneau à cristaux liquides. Quand la lampe source de lumière ne fonctionne plus, remplacez-la par une neuve fournie avec cet appareil de manière que l'image puisse être projetée.

Attention:

- Ne pas enlever la lampe de l'intérieur de cet appareil, aussitôt après avoir terminé l'utilisation du projecteur, sinon la température élevée de la lampe risque de vous brûler.
- Lorsque la lampe doit être remplacée, appuyer sur la touche d'alimentation pour mettre le projecteur hors circuit et attendre 120 secondes en mode d'attente pour refroidir la lampe et les panneaux LCD et couper l'interrupteur principal, puis débrancher de la prise et attendre 60 minutes afin de refroidir la lampe.
- Ne pas enlever la lampe, excepté pour la remplacer. Si cette recommandation n'est pas respectée, des blessures et un incendie risquent d'être provoqués.
- Ne pas toucher la lampe à mains nues. Elle risque de casser et de vous brûler.
- S'assurer de ne pas faire tomber la vis du couvercle de la lampe dans le projecteur. Ne pas insérer d'objets étrangers ou inflammables dans le projecteur, ils risquent de provoquer un incendie ou une décharge électrique. Si des objets sont insérés dans le projecteur, le débrancher et prendre contact avec votre revendeur.
- Fixer la lampe fermement, sinon il y a risque d'incendie.
- **Pour le personnel de service**
  S'assurer de fixer séparément le Top Cover Assy et le Top Case au produit. S'ils sont fixés ensemble, l'obturateur antidéflagrant risque de ne pas fonctionner. Ne pas mettre en marche l'appareil dans une telle condition, sinon la lampe risque d'exploser.

1. Desserrer la vis du couvercle de lampe située sur le capot supérieur en utilisant un tournevis (–) , et déposer le couvercle. (Retirer le couvercle de la lampe dans le sens indiqué par la flèche.)

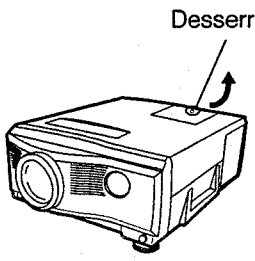

Important:

Faire attention à ne pas endommager le fil électrique connecté à cet équipement.

2. Desserrer la vis (a) du métal de fixation en utilisant un tournevis (+), et les déposer.
   Ne pas perdre le métal de fixation et la vis.

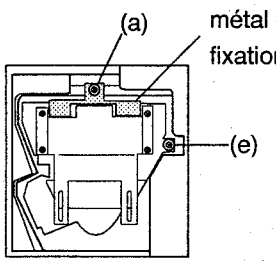

3. Placer le métal de changement de lampe dans le projecteur.
   1) Insérer les ferrures pour le remplacement de la lampe sur les positions suivantes : sur la face avant de la lampe (2 positions), entre les positions de la lampe et sur les bords inférieurs (4 positions).
   2) Aligner les trous de vis (c) sur le noeud (d).
   3) Fixer la pièce en place à l'aide des deux vis fournies (b, b').

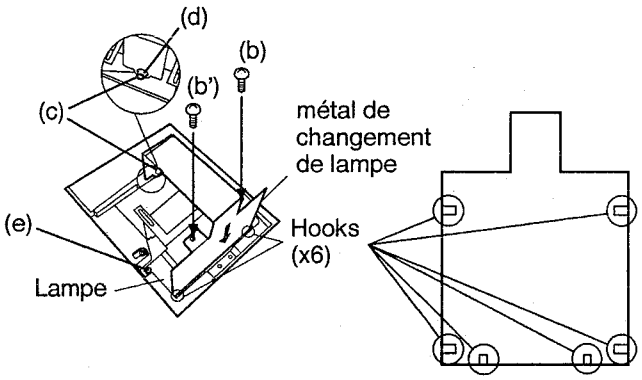

4. Desserrer la vis de fixation de lampe (e) en utilisant un tournevis (+), et la déposer.

5. Maintenir le projecteur par la poignée lorsque vous sortez la lampe.
   Ne pas verser de liquide sur la lampe déposée, la placer près d'objets inflammables ou à portée d'enfants pour ne pas risquer de blessure ou d'incendie.

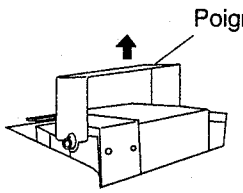

6. Insérer correctement la nouvelle lampe dans le corps du projecteur dans la bonne direction.

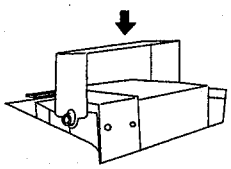

7. Resserrer les vis (e) déposées à l'étape 4 en utilisant un tournevis (+).

8. Desserrer les deux vis (f), (f') du métal de changement en utilisant un tournevis, et les déposer avec le métal.

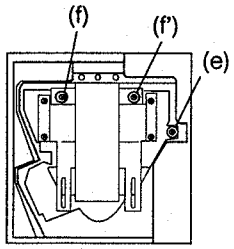

9. Retirer les orifices des ferrures de remplacement de la lampe (c) du node (d).

10. Introduire les pièces métalliques fixes de l'étape 2 dans les trous de vis (f) et (f'), et utiliser une vis (a) pour maintenir la pièce en place.

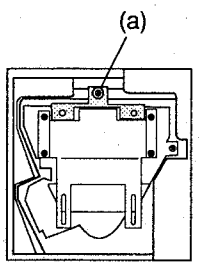

FRANCAIS

11. Serrez la vis du couvercle de la lampe en utilisant un tournevis (–) ou une pièce de monnaie.

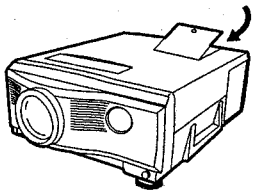

Comment remettre à zéro le compteur de durée d'utilisation

Brancher le câble d'alimentation, mettre le projecteur sous tension, et réinitialiser la durée de lampe en appuyant simultanément sur les touches <,> et POWER.

- La lampe ne peut pas être déposée du projecteur à moins de mettre le métal de changement de lampe.
- Si vous n'avez pas le métal de changement de lampe, retirez le métal de la nouvelle lampe, et utilisez-le. Ne touchez pas directement la lampe. Elle risque de se casser et peut vous blesser ou vous brûler.

Précaution:

- Ne pas verser de liquide sur la lampe déposée, la placer près d'objets inflammables ou à portée d'enfants pour ne pas risquer de blessure ou d'incendie.
- Vérifier que le guide de projecteur est bien inséré entre les guides de lampe droit et gauche. Ne pas toucher directement la lampe, placer un tissu sur la lampe de rechange.

Important:

- Ce projecteur ne se met pas sous tension sans le couvercle de la lampe.
- Après le remplacement de la lampe, le compteur de durée d'utilisation doit être remis à zéro.
- Ne pas remettre à zéro le compteur de durée d'utilisation si la lampe n'a pas été remplacée.

La vie de la lampe

La durée de vie moyenne de la lampe pour ce projecteur est d'environ 1.000 heures d'utilisation consécutive. a durée de service peut être différente selon le milieu d'utilisation. Elle peut être inférieure à 1.000 heures. Une diminution de luminescence et/ou de luminosité des couleurs signale que la lampe de source lumineuse doit être remplacée. Lorsque la durée de service de la lampe de source lumineuse dépasse 1.000 heures, le voyant clignote alternativement en vert et en rouge (pendant l'utilisation de la lampe ; lorsque la lampe n'est pas utilisée, le voyant s'allume uniquement en rouge). Lorsque la lampe a été utilisée pendant environ 1.250 heures, le message "LAMP!!" apparaît sur l'écran. Lorsque la lampe aura été utilisée pendant environ 1.300 heures, le projecteur s'éteindra automatiquement pour la sécurité de la lampe et les indicateurs éclaireront en rouge. le projecteur ne pourra pas être utilisé tant que la lampe n'aura pas été remplacée.

Attention :

- La lampe de source lumineuse est fragile. Faire attention de ne pas se couper avec les éclats.
- La durée de vie de la lampe dépend de l'environnement. Pour le remplacement des lampes, contacter le détaillant.

Le projecteur s'éteint automatiquement lorsque la lampe est usée après environ 1.300 heures et ne fonctionne plus jusqu'à ce que la lampe soit remplacée.

REGLAGE D'ALIGNEMENT DU FOYER DE L'OBJECTIF

Après le remplacement de Lens Unit ou de LCD Block, réaliser cet ajustement. Fixer le Lens Unit pour optimaliser la mise au point lorsqu'on augmente ou qu'on diminue complètement la distance focale.

1. Desserrer les quatre vis fixant le Lens Unit. Placer les vis autour du centre des trous de vis (elliptique).
2. Appuyer sur la touche FOCUS/ZOOM pour indiquer "ZOOM" sur l'écran.
3. Appuyer sur la touche "ADJUST +" pour augmenter complètement la distance focale (à la plus petite image).
4. Optimaliser la mise au point des pixels sur l'écran.
5. Indiquer "ZOOM" sur l'écran. Appuyer sur la touche "ADJUST -" pour diminuer complètement la distance focale (à la plus grande image).
6. Insérer un petit tournevis [équivalent à 0.24 × 4 pouces (6 × 100 mm)] dans l'orifice triangulaire pour un réglage de l'alignement. Tourner le tournevis pour optimaliser la mise au point des pixels sur l'écran. Le Lens Unit se déplacera vers l'avant et l'arrière en faisant tourner le tournevis.
7. Indiquer "ZOOM" sur l'écran. Appuyer sur la touche "ADJUST +" pour augmenter complètement la distance focale.
8. Observer la mise au point. Lorsque la mise au point est optimalisée, cet ajustement est complété. Dans la négative, recommencer ce réglage à partir de l'étape 4.
9. Resserrer les quatre vis (couple de vissage de 14 ± 2 kgf·m).

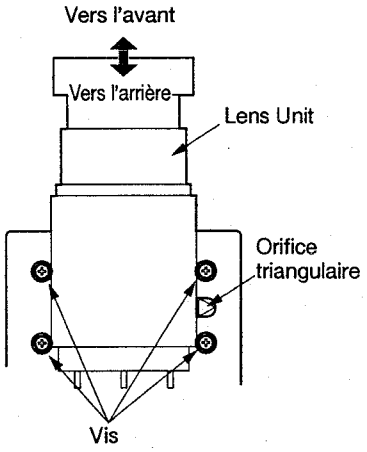

Optical Unit

REGLAGES ELECTRIQUES

Utiliser le programme de communication [Hyper Terminal] du système de fonctionnement Microsoft® Windows® 95 pour le réglage de chaque circuit de ce produit.

❑Equipement nécessaire et raccordements

Raccorder l'équipement suivant, comme il est montré sur la figure de droite.

- LVP-X200E
- Ordinateur personnel (avec le système de fonctionnement Microsoft® Windows® 95)
- Câble RS-232C
- Générateur de signaux XGA (Equivalent à VG-814)
- Générateur de signaux NTSC
- Générateur de signaux PAL
- Moniteur pour un ordinateur personnel

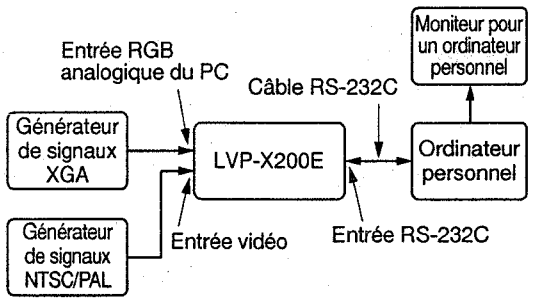

❑Signal d'essai

- Signal de barres colorées NTSC (composé)
- Signal de barres colorées PAL (composé)
- Signal XGA (fréquence horizontale de 60Hz)

Le marquage et les mires pour l'ajustement sont les suivants:

Marquage horizontal

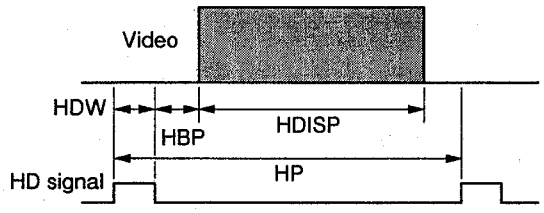

Marquage vertical

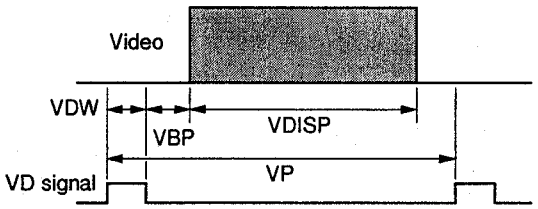

Programme ROM: LC6 Version 1.1

N° du programme	Mire
01	Trame blanche de 100%
12	Trame blanche de 50%
15	Chaque autre ligne horizontale (rouge)
16	Chaque autre ligne horizontale (verte)
17	Chaque autre ligne horizontale (bleue)
35	SMTPE (rouge)
36	SMTPE (verte)
37	SMTPE (bleue)

Marquage du signal XGA (Fréquence horizontale de 60Hz)

DOT-CLOCK [MHz]	65.0	VP [H]	806
HP [DOT]	1344	VDISP [H]	768
HDISP [DOT]	1024	VDW [H]	6
HDW [DOT]	136	VBP [H]	29
HBP [DOT]	160	Entrelaçage	—
		Polarité du signal	HD : –, VD : –

FRANCAIS

❑ Réglage avec le système de fonctionnement de Microsoft® Windows® 95

1. Mise en route

1. Démarrage de Windows® 95.
2. Support à double déclic [Accessories].
3. Support à double déclic [Hyper Terminal].
4. Icône à double déclic [HyperTrm].

2. Réglage de l'Hyper Terminal

1. Cliquer sur le menu du fichier [Properties] à la fenêtre de l'Hyper Terminal.
   La fenêtre [Connection Properties] s'ouvrira.
   Régler la fenêtre de la manière suivante.
2. Cliquer sur [Connecting] dans le menu de communication sur la fenêtre pour connecter LVP-X200E.

Article		Réglage
Comm. Port		Port (COM1-COM4)
Port setting	: Bit/sec	9600
	: Data bit	8 bit
	: Parity	None
	: Stop bit	1
	: Flow control	Hardware
Setting	: Emulation	VT100
ASCII setting	: Sending ASCII	Put a line feed character at the end of the line Local echo Delay (Line) : 1000msec. Delay (Character) : 10msec.
	: Receiving ASCII	Put a line feed character at the end of received data

3. Réglage

Introduire en capitales la commande de réglage et la valeur de réglage sur la fenêtre Hyper Terminal avec le clavier et appuyer sur la touche d'entrée.

4. Valeur de réglage de l'écriture

Introduire en capitales la commande d'écriture et la valeur de réglage sur la fenêtre Hyper Terminal avec le clavier et appuyer sur la touche d'entrée.

Note: Cette opération n'est pas nécessaire pour l'ajustement 2 (niveau de verrouillage) et 3 (convertisseur analogique/numérique) du réglage automatique.

5. Fermeture de la fenêtre

Cliquer sur la touche de fermeture placée en haut à droite de la fenêtre pour fermer Hyper Terminal.
Fermer Windows® 95 après la fermeture de toutes les fenêtres ouvertes.

Procédures de mises au point

[Circuit de puissance de la lampe]	**But du réglage**	Pour régler la puissance fournie à la lampe à une valeur appropriée.
1. Puissance de la source d'énergie de la lampe	**Symptôme lors d'un réglage incorrect**	La lampe ne saute pas à la luminosité spécifiée, ou la lampe risque d'exploser.

Appareil de mesurage	Ampèremètre, voltmètre
Point test	Puissance de sortie de la lampe
Déclencheur EXT	——
Plage de mesurage	——
Signal d'entrée	——
Borne d'entrée	——

* Achever ce réglage en deçà de 1 minute après avoir mis l'équipement sous tension.

1. Retirer le lamp box et le main shield cover de l'équipement.
2. Raccorder un ampèremètre, un voltmètre et une résistance de charge fictive (résistance non inductive de 12Ω 350W) avec la puissance de sortie de la lampe, comme il est montré sur la figure.
3. Mettre l'équipement sous tension.
4. Ajuster VR9V0 (PCB-LAMP POWER) de telle sorte que la puissance de sortie soit de 338±2W (tension de 64V, courant de 5,28A, devant être dans la plage montrée dans le tableau et le graphique suivants). Régler VR9V0 en utilisant l'orifice d'ajustement situé sur PCB-MAIN.

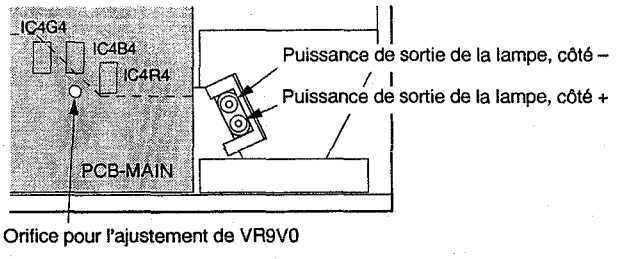

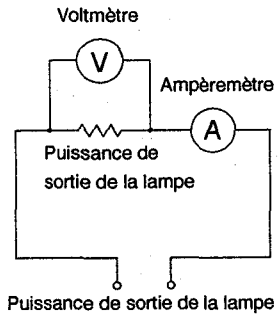

Raccordement des instruments de mesurage

Tableau résumé des ajustments

Tension V	Courant A (max.)	Courant A (min.)
63.60	5.35	5.28
63.65	5.34	5.28
63.70	5.34	5.27
63.75	5.33	5.27
63.80	5.33	2.27
63.85	5.32	5.26
63.90	5.32	5.26
63.95	5.32	5.25
64.00	5.31	5.25
64.05	5.31	5.25
64.10	5.30	5.24
64.15	5.30	5.24
64.20	5.30	5.23
64.25	5.29	5.23
64.30	5.29	5.23
64.35	5.28	5.22
64.40	5.28	5.22
64.45	5.28	5.21
64.50	5.27	5.21
64.55	5.27	5.21
64.60	5.26	5.20

Plage d'ajustements de puissance de la lampe

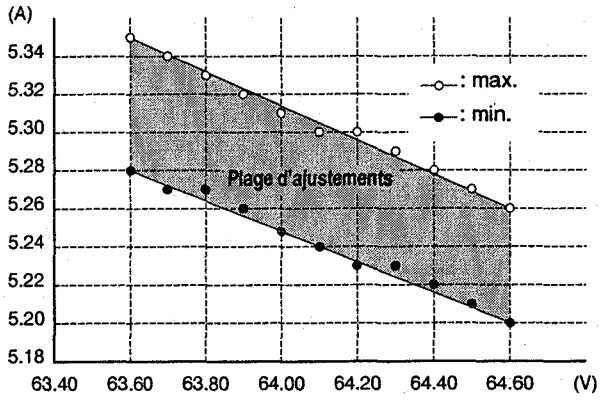

FRANÇAIS

[Circuit de préamplification analogique/numérique] 2. Niveau de verrouillage	**But du réglage**	Pour régler le niveau C.C. du signal d'image devant être introduit au convertisseur analogique/numérique.
	Symptôme lors d'un réglage incorrect	Une image monochrome a une teinte colorée.

Appareil de mesurage	—
Point test	—
Déclencheur EXT	—
Plage de mesurage	—
Signal d'entrée	Signal XGA (100% blanc, N° 01)
Borne d'entrée	Entrée RGB analogique du PC

* Introduire l'instruction d'ajustement avec des caractères alphanumériques en lettres capitales.

1. Raccorder le LVP-X200E à un ordinateur personnel (avec le système de fonctionnement Microsoft® Windows® 95). (Se référer à la figure de la page 11.)
2. Mettre en marche Microsoft® Windows® 95 dans l'ordinateur personnel.
3. Mettre en marche le programme de communication [Hyper Terminal] dans Microsoft® Windows® 95 pour ouvrir la fenêtre. (Pour le réglage, se référer au réglage de Hyper Terminal à la page 12.)
4. Remettre à l'état initial le mode normal sur le menu principal de ce produit.

RGB

5. Fournir un signal XGA (100% blanc, N° 01).
6. Introduire [00~70] (instruction pour le réglage du verrouillage de l'entrée RVB) à la fenêtre Hyper Terminal et le réglage automatique commencera.
7. L'instruction de retour [00~70111] est affichée à la fenêtre de Hyper Terminal après l'ajustement.
   Les 3 derniers chiffres de l'instruction de retour indiquent le résultat de l'ajustement et chaque chiffre correspond dans l'ordre à R, G et B. Le chiffre 1 signifie que l'ajustement est satisfaisant. Le chiffre 0 signifie que l'ajustement n'est pas satisfaisant, du fait d'anomalies sur les cartes à circuits imprimes, de signaux erronés ou d'une sélection d'entrée erronée.

VIDEO

8. Fournir un signal NTSC (barre colorée) à la borne d'entrée vidéo.
9. Introduire [00~71] (instruction pour le réglage du verrouillage de l'entrée VIDEO) à la fenêtre Hyper Terminal et le réglage automatique commencera.
10. L'instruction de retour [00~7111] est affichée à la fenêtre de Hyper Terminal après l'ajustement.
    Les 2 derniers chiffres de l'instruction de retour indiquent le résultat de l'ajustement et chaque chiffre correspond à R-Y et B-Y. Le chiffre 1 signifie que l'ajustement est satisfaisant. Le chiffre 0 signifie que l'ajustement n'est pas satisfaisant, du fait d'anomalies sur les cartes à circuits imprimés, de signaux erronés ou d'une sélection d'entrée erronée.

[Circuit de préamplification analogique/numérique] 3. Convertisseur analogique/numérique	**But du réglage**	Pour régler l'amplitude d'un signal vidéo devant être introduit au convertisseur analogique/numérique.
	Symptôme lors d'un réglage incorrect	Une image monochrome a une teinte colorée.

Appareil de mesurage	—
Point test	—
Déclencheur EXT	—
Plage de mesurage	—
Signal d'entrée	Signal XGA (100% blanc, N° 01)
Borne d'entrée	Entrée RGB analogique du PC

* Introduire l'instruction d'ajustement avec des caractères alphanumériques en lettres capitales.

1. Raccorder le LVP-X200E à un ordinateur personnel (avec le système de fonctionnement Microsoft® Windows® 95). (Se référer à la figure de la page 11.)
2. Mettre en marche Microsoft® Windows® 95 dans l'ordinateur personnel.
3. Mettre en marche le programme de communication [Hyper Terminal] dans Microsoft® Windows® 95 pour ouvrir la fenêtre. (Pour le réglage, se référer au réglage de Hyper Terminal à la page 12.)
4. Remettre à l'état initial le mode normal sur le menu principal de ce produit.
5. Fournir un signal XGA (100% blanc, N° 01).
6. Introduire [00~5] (instruction d'ajustement analogique/numérique) à la fenêtre Hyper Terminal et le réglage automatique commencera.
7. L'instruction de retour [00~5111] est affichée à la fenêtre de Hyper Terminal après l'ajustement.
   Les 3 derniers chiffres de l'instruction de retour indiquent le résultat de l'ajustement et chaque chiffre correspond dans l'ordre à R, G et B. Le chiffre 1 signifie que l'ajustement est satisfaisant. Le chiffre 0 signifie que l'ajustement n'est pas satisfaisant, du fait d'anomalies sur les cartes à circuits imprimes, de signaux erronés ou d'une sélection d'entrée erronée.

[Circuit du réglage de commande du panneau à cristaux liquides] 4. Image multiple	**But du réglage**	Pour éliminer les images multiples de l'écran.
	Symptôme lors d'un réglage incorrect	Les images multiples apparaissent à chaque 12 éléments d'image.

Appareil de mesurage	---
Point test	---
Déclencheur EXT	---
Plage de mesurage	---
Signal d'entrée	Signal XGA (SMTPE(R), N° 35)
Borne d'entrée	Entrée RGB analogique du PC

* Ne faire ce réglage que lorsque des images doubles sont particulièrement remarquables sur l'écran.
* Introduire l'instruction d'ajustement avec des caractères alphanumériques en lettres capitales.

1. Raccorder le LVP-X200E à un ordinateur personnel (avec le système de fonctionnement Microsoft® Windows® 95). (Se référer à la figure de la page 11.)
2. Mettre en marche Microsoft® Windows® 95 dans l'ordinateur personnel.
3. Mettre en marche le programme de communication [Hyper Terminal] dans Microsoft® Windows® 95 pour ouvrir la fenêtre. (Pour le réglage, se référer au réglage de Hyper Terminal à la page 12.)
4. Remettre à l'état initial le mode normal sur le menu principal de ce produit.
5. Images projetées sur l'écran.

Rouge

6. Fournir un signal XGA (SMTPE(R), N° 35).
7. Faire fonctionner la source du signal devant être projetée en rouge monochrome sur l'écran.
8. Introduire l'instruction du réglage [00~3123□□] à la fenêtre Hyper Terminal pour réduire au minimum les images doubles rouges. Introduire [99], [AA], [BB], [CC] ou [DD] à □□ pour réduire au minimum les images fantômes. [BB] a été écrit à □□ avant la mise au point.
   (*1) Lorsque l'instruction envoyée est affichée, la transmission est accomplie correctement. La valeur de l'intensité peut être confirmée en envoyant l'instruction sans introduire aucune valeur à □□.
9. Introduire une instruction pour l'écriture [00~1E93□□] à la fenêtre de Hyper Terminal et écrire la valeur modifiée sur EEPROM. Introduire la valeur de l'étape 8 à □□. (*1)

Vert

10. Fournir un signal XGA (SMTPE(G), N° 36).
11. Faire fonctionner la source du signal devant être projetée en vert monochrome sur l'écran.
12. Introduire l'instruction du réglage [00~3223□□] à la fenêtre Hyper Terminal pour réduire au minimum les images doubles vertes. Introduire [99], [AA], [BB], [CC] ou [DD] à □□ pour réduire au minimum les images fantômes. [BB] a été écrit à □□ avant la mise au point. (*1)
13. Introduire une instruction pour l'écriture [00~1EAA□□] à la fenêtre de Hyper Terminal et écrire la valeur modifiée sur EEPROM. Introduire la valeur de l'étape 12 à □□. (*1)

Bleu

14. Fournir un signal XGA (SMTPE(B), N° 37).
15. Faire fonctionner la source du signal devant être projetée en bleu monochrome sur l'écran.
16. Introduire l'instruction du réglage [00~3323□□] à la fenêtre Hyper Terminal pour réduire au minimum les images doubles bleus. Introduire [99], [AA], [BB], [CC] ou [DD] à □□ pour réduire au minimum les images fantômes. [BB] a été écrit à □□ avant la mise au point. (*1)
17. Introduire une instruction pour l'écriture [00~1EC1□□] à la fenêtre de Hyper Terminal et écrire la valeur modifiée sur EEPROM. Introduire la valeur de l'étape 16 à □□. (*1)

[Circuit du réglage de commande du panneau à cristaux liquides] 5. Linéarité verticale	**But du réglage**	Pour éliminer les lignes verticales de l'écran.
	Symptôme lors d'un réglage incorrect	Des lignes verticales apparaissent à chaque 12 éléments d'image.

Appareil de mesurage	—
Point test	—
Déclencheur EXT	—
Plage de mesurage	—
Signal d'entrée	Signal XGA (50% blanc, N° 12)
Borne d'entrée	Entrée RGB analogique du PC

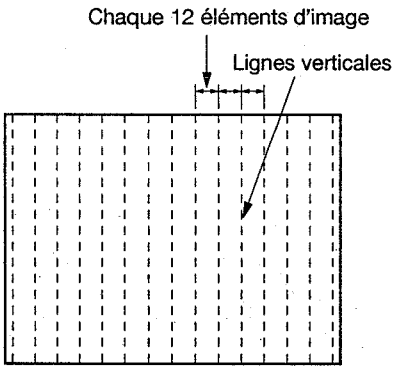

* Ne faire ce réglage que lorsque des lignes verticales sont particulièrement remarquables sur l'écran.
* Introduire l'instruction d'ajustement avec des caractères alphanumériques en lettres capitales.

1. Raccorder le LVP-X200E à un ordinateur personnel (avec le système de fonctionnement Microsoft® Windows® 95). (Se référer à la figure de la page 11.)
2. Mettre en marche Microsoft® Windows® 95 dans l'ordinateur personnel.
3. Mettre en marche le programme de communication [Hyper Terminal] dans Microsoft® Windows® 95 pour ouvrir la fenêtre. (Pour le réglage, se référer au réglage de Hyper Terminal à la page 12.)
4. Remettre à l'état initial le mode normal sur le menu principal de ce produit.
5. Fournir un signal XGA (50% blanc, N° 12).
6. Images projetées sur l'écran.
7. Introduire l'instruction du réglage [00~227 □□] à la fenêtre Hyper Terminal pour réduire au minimum les lignes verticales. Introduire n'importe quelle valeur de [10h] à [FFh] à □□ pour un minimum de lignes verticales. [10h] a été écrit à □□ avant le réglage.
   (*1) Lorsque l'instruction envoyée est affichée, la transmission est accomplie correctement. La valeur de l'intensité peut être confirmée en envoyant l'instruction sans introduire aucune valeur à □□.
8. Introduire une instruction pour l'écriture [00~1F2B□□] à la fenêtre de Hyper Terminal et écrire la valeur modifiée sur EEPROM. Introduire la valeur de l'étape 7 à □□. (*1)

FRANÇAIS

[Circuit du réglage de commande du panneau à cristaux liquides] 6. Papillotement	But du réglage	Pour éliminer les papillotements de l'écran.
	Symptôme lors d'un réglage incorrect	Des papillotements apparaissent.

Appareil de mesurage	—
Point test	—
Déclencheur EXT	—
Plage de mesurage	—
Signal d'entrée	Signal XGA (Ligne horizontale à chaque autre élément d'image rouge, N° 15)
Borne d'entrée	Entrée RGB analogique du PC

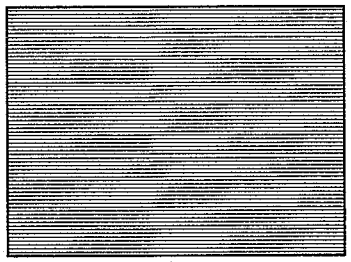

Ligne horizontale à chaque mire d'éléments d'image

* Ne faire ce réglage que lorsque des papillotements sont particulièrement remarquables sur l'écran.
* Introduire l'instruction d'ajustement avec des caractères alphanumériques en lettres capitales.

1. Raccorder le LVP-X200E à un ordinateur personnel (avec le système de fonctionnement Microsoft® Windows® 95). (Se référer à la figure de la page 11.)
2. Mettre en marche Microsoft® Windows® 95 dans l'ordinateur personnel.
3. Mettre en marche le programme de communication [Hyper Terminal] dans Microsoft® Windows® 95 pour ouvrir la fenêtre. (Pour le réglage, se référer au réglage de Hyper Terminal à la page 12.)
4. Remettre à l'état initial le mode normal sur le menu principal de ce produit.

Rouge

5. Fournir un signal XGA (ligne horizontale à chaque autre élément d'image rouge, N° 15).
6. Images projetées sur l'écran.
7. Introduire l'instruction du réglage [00~229 □□] à la fenêtre Hyper Terminal pour réduire au minimum les papillotements rouges. Introduire n'importe quelle valeur de [00h] à [FFh] à □□ pour des papillotements minimum. [A0h] a été écrit à □□ avant le réglage.
   (*1) Lorsque l'instruction envoyée est affichée, la transmission est accomplie correctement. La valeur de l'intensité peut être confirmée en envoyant l'instruction sans introduire aucune valeur à □□.
8. Introduire une instruction pour l'écriture [00~1F2D □□] à la fenêtre de Hyper Terminal et écrire la valeur modifiée sur EEPROM. Introduire la valeur de l'étape 7 à □□. (*1)

Vert

9. Fournir un signal XGA (ligne horizontale à chaque autre élément d'image vert, N° 16).
10. Introduire l'instruction du réglage [00~22A □□] à la fenêtre Hyper Terminal pour réduire au minimum les papillotements verts. Introduire n'importe quelle valeur de [00h] à [FFh] à □□ pour des papillotements minimum. [A0h] a été écrit à □□ avant le réglage.(*1)
11. Introduire une instruction pour l'écriture [00~1F2E □□] à la fenêtre de Hyper Terminal et écrire la valeur modifiée sur EEPROM. Introduire la valeur de l'étape 10 à □□. (*1)

Bleu

12. Fournir un signal XGA (ligne horizontale à chaque autre élément d'image bleue, N° 17).
13. Introduire l'instruction du réglage [00~22B □□] à la fenêtre Hyper Terminal pour réduire au minimum les papillotements bleus. Introduire n'importe quelle valeur de [00h] à [FFh] à □□ pour des papillotements minimum. [A0h] a été écrit à □□ avant le réglage.(*1)
14. Introduire une instruction pour l'écriture [00~1F2F □□] à la fenêtre de Hyper Terminal et écrire la valeur modifiée sur EEPROM. Introduire la valeur de l'étape 13 à □□. (*1)

INDICATION D'UNE ERREUR DE LA DEL

Cet appareil est muni d'une fonction d'auto-diagnostic. Dans le cas de n'importe quelle anormalité, la DEL (diode electroluminescente) en haut de l'appareil indiquera les erreurs.

Méthode de diagnostic : Chaque fois que l'énergie principale est mise sous tension, le commutateur est mis en circuit et chaque détecteur est vérifié pour n'importe quelle erreur pendant 4 secondes. POWER LED reste rouge pendant la vérificaiton.

Indication du résultat du diagnostic : L'indication de la DEL et les défaillances sont montrées dans le tableau suivant. La DEL peut être remise "automatiquement" à l'état initial ou "en mettant en circuit/hors circuit l'énergie principale" lorsque la détection de la défaillance est terminée.

Mise sous tension forcée : Lorsque l'équipement ne peut être mis en marche du fait d'un court-circuit de l'énergie d'attente ou d'un court-circuit de l'énergie du commutateur, appuyer simultanément sur les trois touches RGB, VIDEO et CARD à la partie supérieure de l'appareil pendant les 4 secondes de vérification du détecteur pour mettre l'appareil en marche pour une détection de la défaillance. Dans ce cas, les circuits de protection fonctionneront, à l'exception d'un court-circuit de l'énergie d'attente et d'un court-circuit de l'énergie du commutateur.

Liste des indications d'une erreur de la DEL

Ordre de préférence	Défaillance	Symptôme	Objet	Indication de la DEL					Remise à l'état initial
				POWER	LAMP	TEMP	CARD1	CARD2	
1	Court-circuit de l'énergie d'attente	Pas de mise sous tension	Détection de la défaillance	Rouge/Vert alternativement	Orange	2 clignotements rouge	*	*	Energie principale
2	Court-circuit du commutateur	Pas de mise sous tension	Détection de la défaillance	Rouge/Vert alternativement	Orange	Clignotement rouge	*	*	Energie principale
3	Arrêt du ventilateur (unité optique)	Pas de mise sous tension	Détection de la défaillance	Rouge/Vert alternativement	Rouge	3 clignotements rouge	*	*	Energie principale
4	Arrêt du ventilateur (évacuation)	Pas de mise sous tension	Détection de la défaillance	Rouge/Vert alternativement	Rouge	2 clignotements rouge	*	*	Energie principale
5	Arrêt du ventilateur (aspiration)	Pas de mise sous tension	Détection de la défaillance	Rouge/Vert alternativement	Rouge	Clignotement rouge	*	*	Energie principale
6	Arrêt du ventilateur (énergie)	Pas de mise sous tension	Détection de la défaillance	Rouge/Vert alternativement	Rouge	4 clignotements rouge	*	*	Energie principale
7	Ouverture du boîtier de la lampe	Pas de mise sous tension	Prévention d'un danger	Rouge/Vert alternativement	–	–	*	*	Automatique
8	Ouverture du boîtier du ventilateur	Pas de mise sous tension	Prévention contre une admission de poussière	Rouge/Vert alternativement	–	–	*	*	Automatique
9	Thermistor débranché (évacuation)	Pas de mise sous tension	Détection de la défaillance	Rouge/Vert alternativement	–	Clignotement rouge	*	*	Automatique
10	Thermistor débranché (lampe)	Pas de mise sous tension	Détection de la défaillance	Rouge/Vert alternativement	–	2 clignotements rouge	*	*	Automatique
11	Défaillance de communications entre les ordinateurs	Pas de mise sous tension	Détection de la défaillance	Rouge/Vert alternativement	Orange	Rouge	*	*	Automatique
12	Défaillance du bus IIC (EEPROM)	Pas de mise sous tension	Détection de la défaillance	Rouge/Vert alternativement	Vert	2 clignotements rouge	*	*	Automatique
13	Défaillance du bus IIC (décodeur)	Affichage inférieur de l'entrée VIDEO	Détection de la défaillance	Rouge/Vert alternativement	Vert	Clignotement rouge	*	*	Automatique

– : DEL hors circuit
* : Ne nécessite pas une confirmation.
Orange : Rouge et vert s'allument à la fois.
Clignotement rouge N : Le cycle où le rouge clignote et s'éteint N fois est répété pendant une durée fixée.

Liste des indications d'une erreur de la DEL

Ordre de préférence	Défaillance	Symptôme	Objet	Indication de la DEL					Remise à l'état initial
				POWER	LAMP	TEMP	CARD1	CARD2	
14	Détecteur de température (lampe)	Pas de mise sous tension	Elévation de la température	Rouge	–	2 clignotements rouge	*	*	Automatique
15	Détecteur de température (arrivée)	Pas de mise sous tension	Elévation de la température	Rouge	–	Clignotement rouge	*	*	Automatique
16	Détecteur de température (carte à circuits imprimés)	Pas de mise sous tension	Elévation de la température	Rouge	–	3 clignotements rouge	*	*	Automatique
17	Longévité de la lampe (1000~1300h)	Seulement indication d'un avertissement par la DEL	Indication d'un avertissement par la DEL Indication pendant une attente	Rouge	Clignotement rouge	–	*	*	Manuelle
			Indication d'un avertissement par la DEL Indication pendant une attente	Vert	Rouge/Vert alternativement	–	*	*	Manuelle
	Longévité de la lampe (1300h ou plus)	Pas de mise sous tension	Longévité de la lampe	Rouge	Rouge	–	*	*	Manuelle
18	La lampe ne s'allume pas	Pas d'énergie pendant 1 minute	Protection de la lampe	Rouge	Clignotement vert	–	*	*	Automatique
19	Pendant 1 minute après la mise en circuit	Pas de la mise hors circuit pendant 1 minute	Protection de la lampe	Vert	Clignotement vert	–	*	*	Automatique
20	Pendant 1 minute après la mise hors circuit	Pas d'énergie pendant 1 minute	Protection de la lampe	Rouge	Clignotement vert	–	*	*	Automatique
21	Défaillance du bus IIC (HIC)	Affichage inférieur de toutes les entrées	Détection de la défaillance	*	*	*	Clignotement vert	Clignotement vert	Automatique
22	Défaillance du bus IIC (EEPROM)	Pas de mise sous tension	Détection de la défaillance	*	*	*	2 Clignotement vert	2 Clignotement vert	Automatique

– : DEL hors circuit
* : Ne nécessite pas une confirmation.
Orange : Rouge et vert s'allument à la fois.
Clignotement rouge N : Le cycle où le rouge clignote et s'éteint N fois est répété pendant une durée fixée.

INHALT

TECHNISCHE DATEN **1**
SICHERHEITSMASSREGELN **1**
WARNUNG 1
KRIECHSTROMPRÜFUNG 1
ANORDNUNG DER LEITERPLATTEN **2**
AUSBAU VON KOMPONENTEN **3**
VERLEGUNG DER LEITUNGSDRÄHTE **7**
WECHSELN DER LAMPE **9**
SCHARFEINSTELLUNG DES OBJEKTIVS **10**
ELEKTRISCHE EINSTELLUNGEN **11**
Erforderliche Ausrüstung und Anschlüsse 11
Testsignal 11
Einstellung mit Microsoft® Windows® 95 Betriebssystem 12
Einstellvorgänge 13
Lampenstromkreis-Einstellung
1. Lampenstromquellen-Stärkeneinstellung 13
Einstellung des A/D-Vorverstärker-Schaltkreis
2. Einstellung des Klemmpegel 14
3. Einstellung des A/D-Wandler 15
Einstellung des Flüssigkristallanzeige-Treiberkreis-Einstellung 16
4. Geisterbilder-Einstellung 16
5. Einstellung der vertikalen Linien 17
6. Flimmer-Einstellung 18
LED-FEHLERANZEIGE **19**
OPTION BOARD INSTALLATION
PARTS LIST
REPACKING PROCEDURE
ELECTRICAL PARTS AND OTHERS
IC BLOCK DIAGRAM
SCHEMATIC DIAGRAM
PRINTED CIRCUIT BOARD PARTS LAYOUT

DEUTSCH

WARENZEICHEN, EINGETRAGENE WARENZEICHEN

Apple, Macintosh sind eingetragene Warenzeichen von Apple Computer Inc.
IBM, VGA, PS/2 sind Warenzeichen oder eingetragene Warenzeichen von International Business Mashines Corporation.
Microsoft®, Windows® 95 sind eingetragende Warenzeichen von Microsoft in den USA und anderen Ländern.
Andere Marken-order Produktnamen sind Warenzeichen oder eingetragene Warenzeichen ihrer jeweiligen inhaber.

TECHNISCHE DATEN

- **Nennleistung** : AC 100~240V ; 50 / 60Hz
- **Nenneingangsspannung** : 5.0A
- **LCD-Anzeige** : LCD-Anzeige3,3 cm: 3 Stück (für R,G,B)
  Pixels 1,024 × 768= 786,432 pixels
  Insgesamt 2,359,296 pixels
  Aktive pixelrate: 99,9% oder mehr (jede Anzeige)
- **Projektionslinse** : F 2,3~2,7 f = 53,3-69,3 mm
- **Lampe** : 330W DC metall-halogen-lampe
- **Bildgröße** : Bildformat 4:3 40~300 zoll
- **Lautsprecher** : 60 mm, round × 2 Stück
- **S-Videoeingang** : Helligkeitssignal : 1,0Vp-p 75Ω (negativ synch.)
  Farbton-und Sättigungssinal: 0,286Vp-p 75 (Farbsynchronsignal)
- **Videoeingang** : 1,0Vp-p 75 (negativ synch.)
- **Audioeingang** : 350mVrms, 10k oder mehr
- **PC Audio eingang** : 350mVrms, 10k oder mehr
- **Analog RGB Eingang** : Mini D-SUB 15P
  RGB: 0,7Vp-p 75Ω (positiv sync.)
  YCbCr: 1,0Vp-p (Y) (negativ synch.)
  Cb, Cr: 0,7Vp-p
  HD/CS: TTL-Niveau (positiv)
  VD: TTL-Niveau (positiv)

Außenabmessungen : 330(B) × 145(H) × 398(T) mm
Füße und Linsen nicht eingeschlossen

- **Gewicht** : 9,8 kg
- **Länge des Einschaltcodes** : 2,9 m

- Gewicht und Abmessungen sind ungefähre Werte.
- Änderungen des Designs und der technischen Daten ohne Vorankündigung vorbehalten.

DEUTSCH

SICHERHEITSMASSREGELN

HINWEIS: Alle Warn und Sicherheitshinweise im Inneren des Projektorgehäuses und an dem Projektorchassis beachten.

WARNUNG

1. Ein Isoliertransformator sollte zwischen dem Projektor und der Wechselstromversorgung verwendet werden, bevor Prüfungen/Wartungen an einem unter Strom stehenden Projektorchassis ausgeführt werden.
2. Der Betrieb dieses Projektors außerhalb des Gehäuses oder mit abgenommenen Abdeckungen führt zu Stromschlaggefahr von der Stromversorgung des Projektors. Arbeiten an dem Projektor dürfen nur von ausgebildetem Personal ausgeführt werden, das mit allen erforderlichen Vorsichtsmaßnahmen bei Arbeiten an Hochspannungsgeräten vertraut ist.
3. Wenn Wartung erforderlich ist, die ursprüngliche Verlegung der Leitungsdrähte beachten. Besondere Vorsicht ist geboten, um richtiges Verlegen der Leitungsdrähte im Hochspannungsbereich sicherzustellen. Falls ein Kurzschluß verursacht wurde, alle Komponenten mit Anzeichen von Überhitzung erneuern.

KRIECHSTROMPRÜFUNG

Vor der Auslieferung des Projektors an den Kunden sollte der Kriechstrom gemäß nachfolgenden Methoden gemessen werden.
Den Netzstecker von der Wechselstromvrsorgung abziehen und eine Überbrückung an den beiden Klemmen des Netzsteckers anbringen. Den Netzschalter des Projektors einschalten. Ein 500V Gleichstrom-Isolationsprüfgerät verwenden, einen Leiter an den überbrückten netzstecker anschließen und mit dem anderen Leiter ein freiliegendes Metallteil (Schraubenkopf usw.) berühren (besonders ein freiliegendes Metallteil mit Verbindung zum Chassis). Freiliegende Metallteile mit Verbindung zum Chassis sollten eine minimale Widerstandsanzeige von 4 Mohm aufweisen. Jeder Widerstand unter diesem Wert Weist auf eine Abnormalität hin, die behoben werden muß.

ANORDNUNG DER LEITERPLATTEN

DEUTSCH

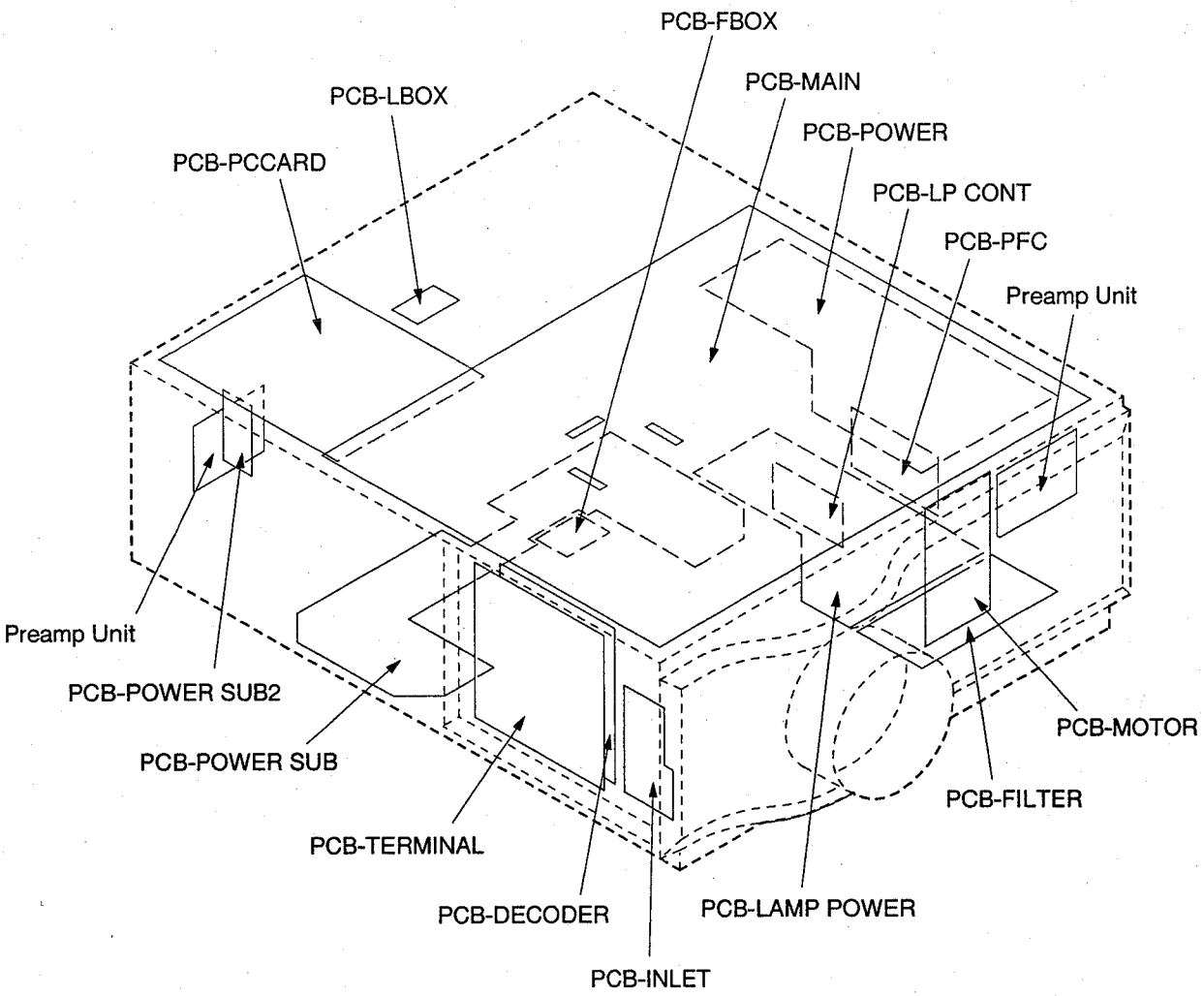

Abb. 1

AUSBAU VON KOMPONENTEN

Für die Teile-Nummer siehe die STÜCKLISTE.

Hinweis: Immer die Top Cover Assy und das Top Case getrennt am Produkt anbringen. Wenn diese Teile zusammen angebracht werden, kann es sein, daß der explosionsfester Verschluß nicht richtig arbeitet. Das Gerät darf in diesem Zustand nicht eingeschaltet werden, oder die Lampe kann explodieren.

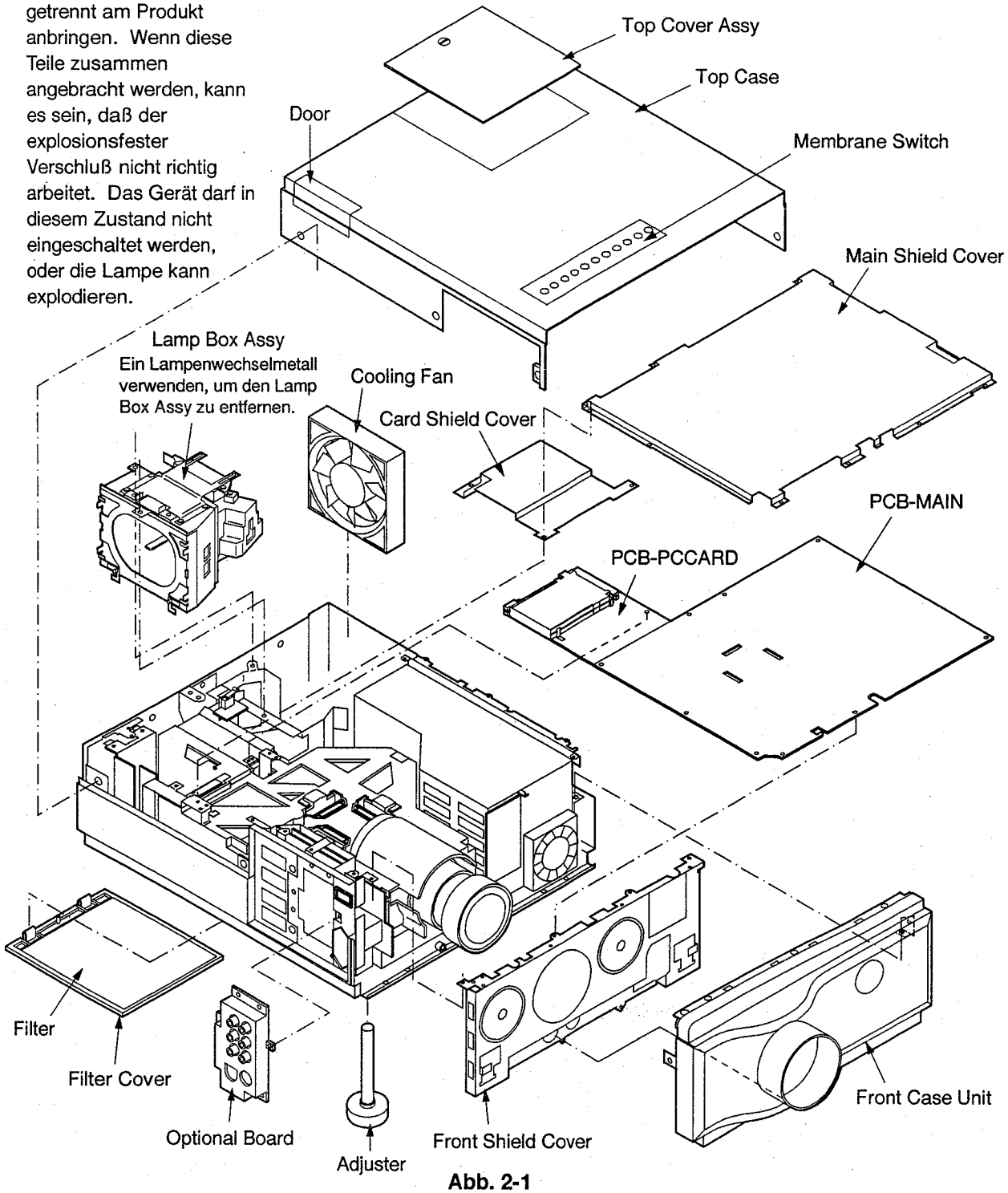

Abb. 2-1

Teilebezeichnung	Anzahl der Schrauben
Optional Board	6
Top Case	8
Top Cover Assy	1
Lamp Box Assy	2
Front Case Unit	3
Main Shield Cover	11

Teilebezeichnung	Anzahl der Schrauben
Card Shield Cover	3
PCB-MAIN	8
PCB-PCCARD	4
Front Shield Cover	5
Filter Cover	(2 Haken)

Anzahl der Schrauben: Die Anzahl der Schrauben, mit der die Teile befestigt sind.

Tabelle 1-1

Für die Teile-Nummer siehe die STÜCKLISTE.

Hinweis: Arbeiter müssen das Handgelenkband tragen, um das LCD während der Operationen gegen statische Elektrizität schützen.

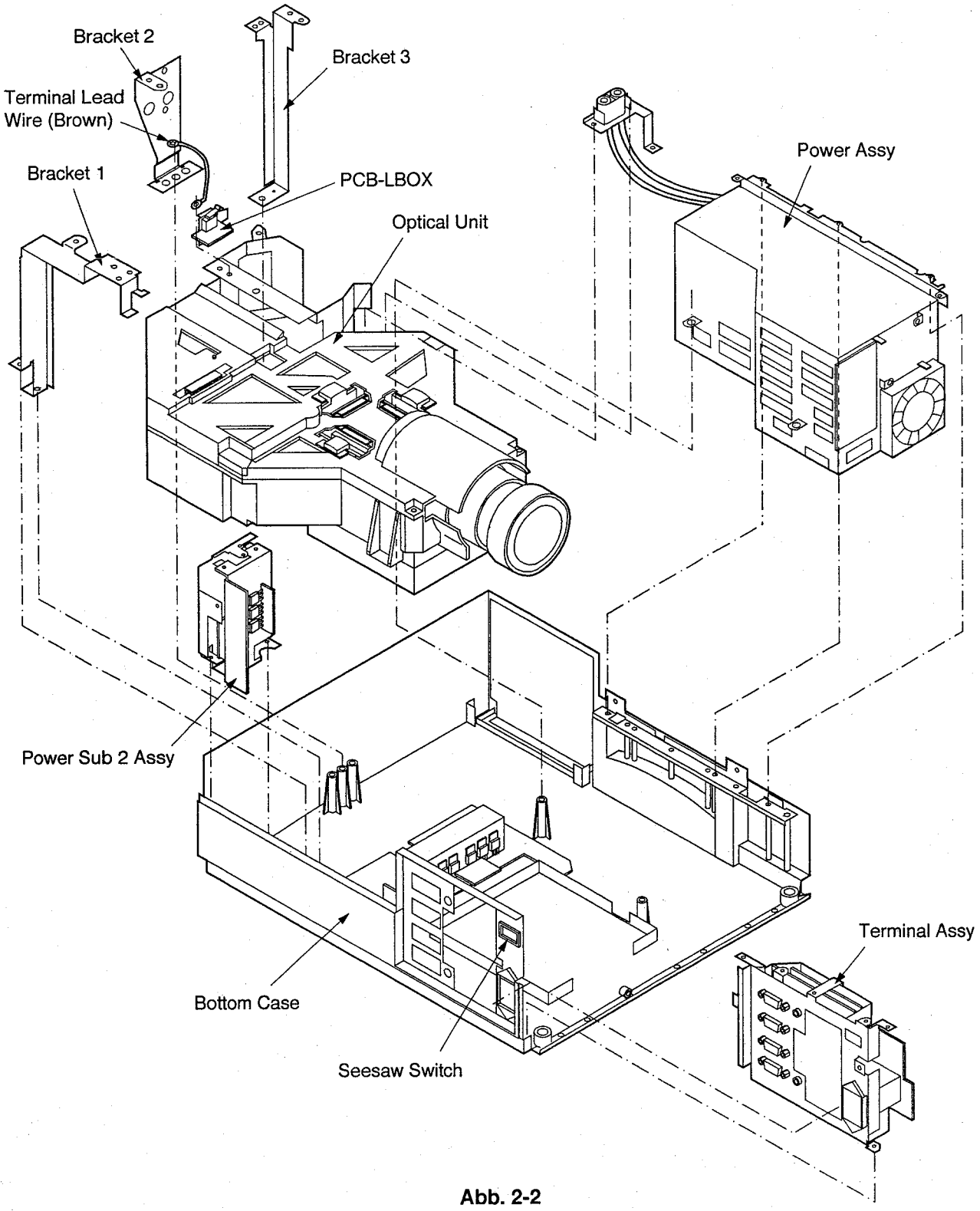

Abb. 2-2

Teilebezeichnung	Anzahl der Schrauben
Power Assy	7
Bracket 1	2
Bracket 2	1
Bracket 3	1

Teilebezeichnung	Anzahl der Schrauben
PCB-LBOX	2
Optical Unit	3
Power Sub 2 Assy	2
Terminal Assy	6

Anzahl der Schrauben: Die Anzahl der Schrauben, mit der die Teile befestigt sind.

Tablelle 1-2

Für die Teile-Nummer siehe die STÜCKLISTE.

Hinweis: Arbeiter müssen das Handgelenkband tragen, um das LCD während der Operationen gegen statische Elektrizität schützen.

Power Sub 2 Assy-Teile

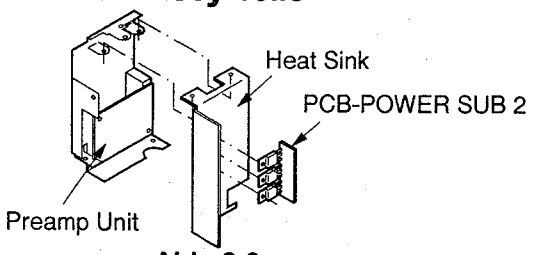

Abb. 2-3

Teilebezeichnung	Anzahl der Schrauben
PCB-POWER SUB 2	3
Heat Sink	2
PREAMP UNIT	2

Tabelle 1-3

Terminal Assy-Teile

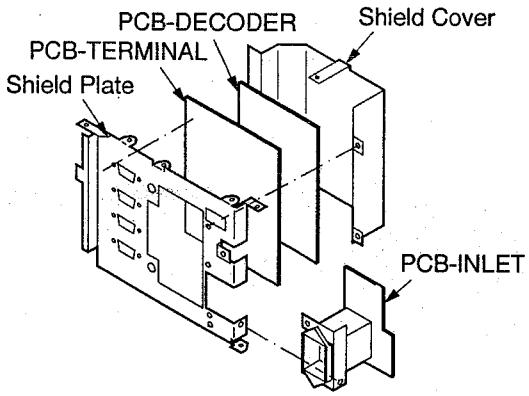

Abb. 2-4

Teilebezeichnung	Anzahl der Schrauben
Shield Cover	7
PCB-DECODER	(4 Haken)
PCB-TERMINAL	10
PCB-INLET	3

Tabelle 1-4

Power Assy-Teile

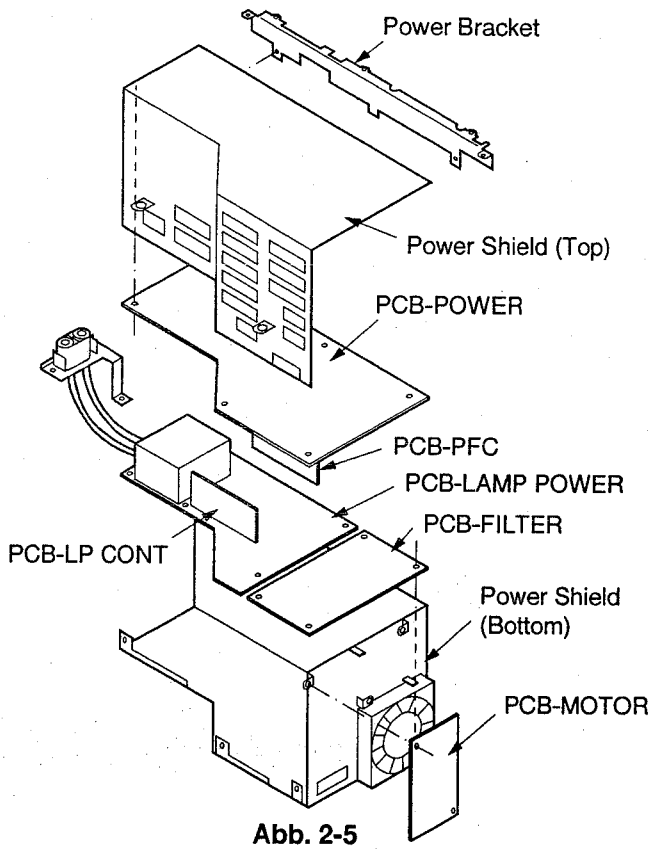

Abb. 2-5

Teilebezeichnung	Anzahl der Schrauben
Power Bracket	2
Power Shield (Top)	5
PCB-POWER	1 (5 Haken)
PCB-PFC	keine
PCB-LAMP POWER	(4 Haken)
PCB-MOTOR	2
PCB-FILTER	1 (3 Haken)
PCB-LP CONT	keine

Tabelle 1-5

Bottom Case-Teile

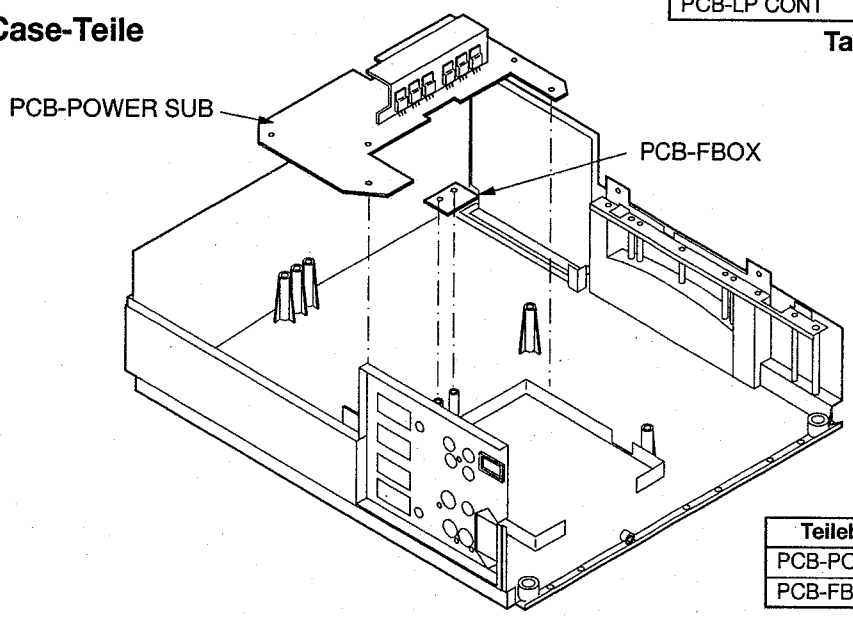

Abb. 2-6

Teilebezeichnung	Anzahl der Schrauben
PCB-POWER SUB	6
PCB-FBOX	2

Tabelle 1-6

DEUTSCH

Optical Unit-Teile

Für die Teile-Nummer siehe die STÜCKLISTE.

* Nach dem Austauschen der Obhektiveinheit (Lens Unit) oder des LCD-Blocks (LCD Block), die Scharfeinstellung des Objektivs vornehmen.

Hinweis: Arbeiter müssen das Handgelenkband tragen, um das LCD während der Operationen gegen statische Elektrizität schützen.

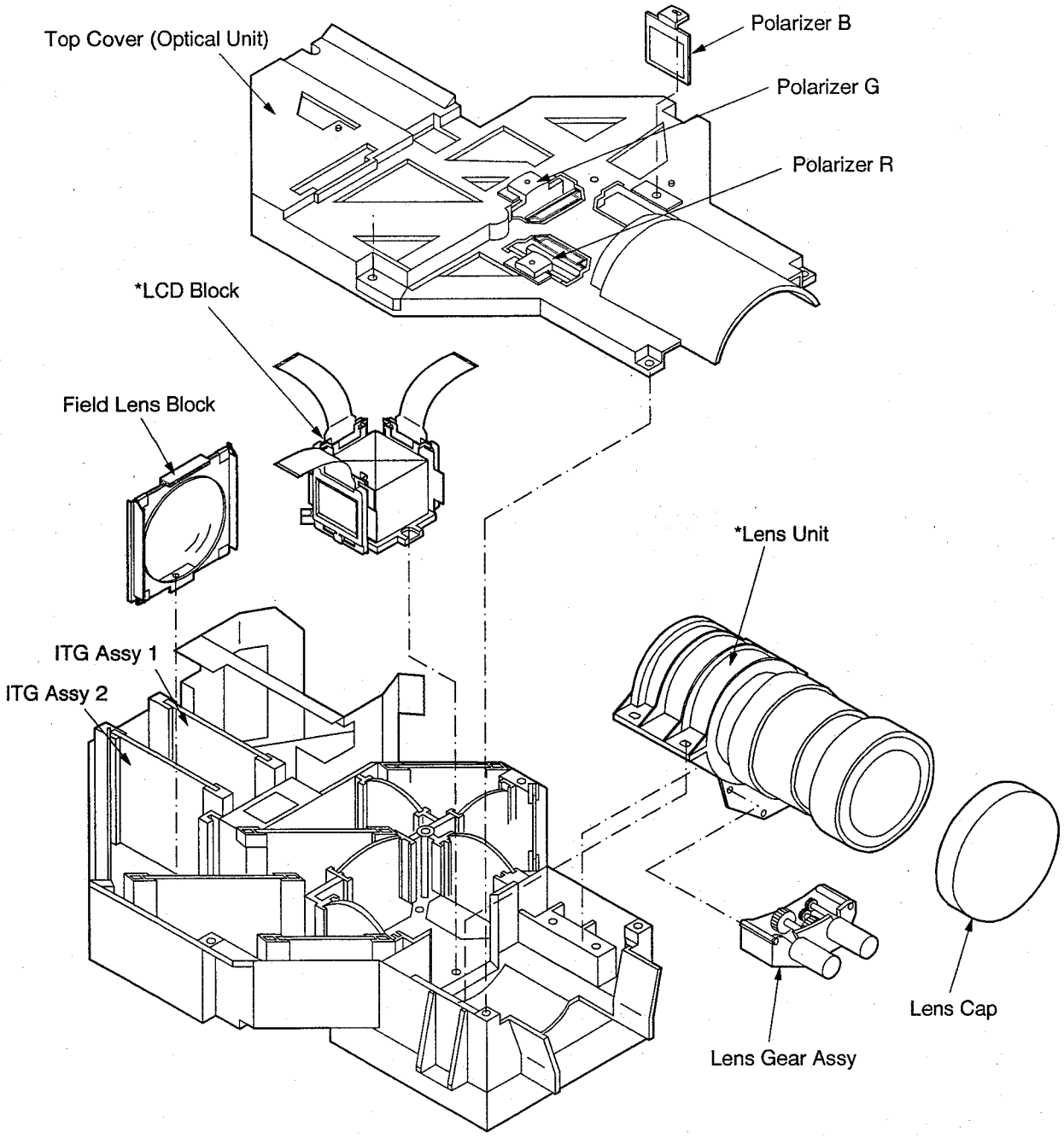

Abb. 2-7

Teilebezeichnung	Anzahl der Schrauben
Top Cover (Optical Unit)	6
Polarizer R	1
Polarizer G	1
Polarizer B	1

Teilebezeichnung	Anzahl der Schrauben
LCD Block	3
Field Lens Block	1
Lens Unit	4
Lens Gear Assy	3

Anzahl der Schrauben: Die Anzahl der Schrauben, mit der die Teile befestigt sind.

Tabelle 1-7

VERLEGUNG DER LEITUNGSDRÄHTE

Hinweis: 1. Die inneren Drähte sind festgeklemmt, so daß sie nicht an wärmeerzeugende oder unter Hochspannung stehende Teile angenähert werden. Nach der Wartung sind alle Drähte an ihren ursprünglichen Positionen zu verlegen.
2. Arbeiter müssen das Handgelenkband tragen, um das LCD während der Operationen gegen statische Elektrizität schützen.

1. Die Leitungsdrähte in der folgenden Abbildung gezeigten Klemmzone* festklemmen.
* Klemmzone zeigt die Route des Leitungsdrahtes.

———	Klemmzone*
·····	Versteckte Klemmzone*

Verlegung der Leiungsdrähte vor dem Einstellen der optischen Einheit (Optical Unit)

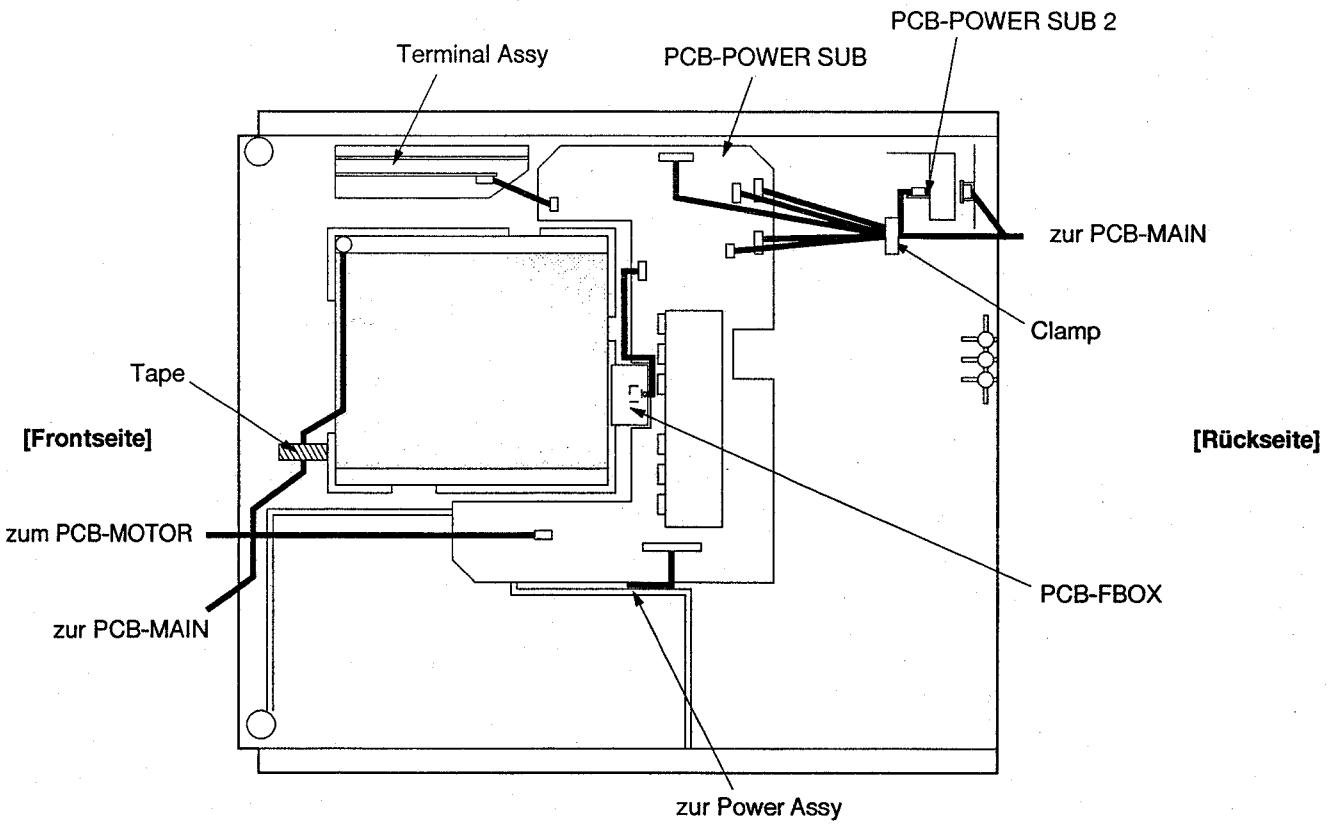

Abb. 3-1

Verlegung der Leitungsdrähte, wenn die optische Einheit (Optical Unit) und das Netzteil (Power Assy) eingestellt wurden

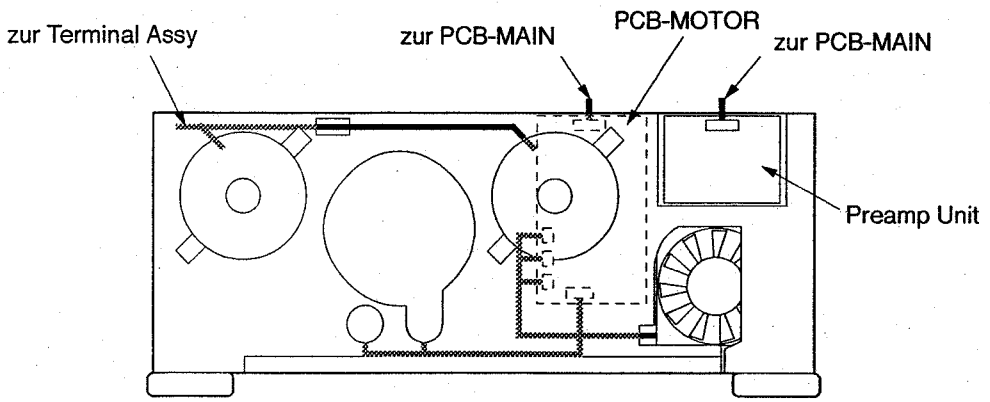

Abb. 3-2

DEUTSCH

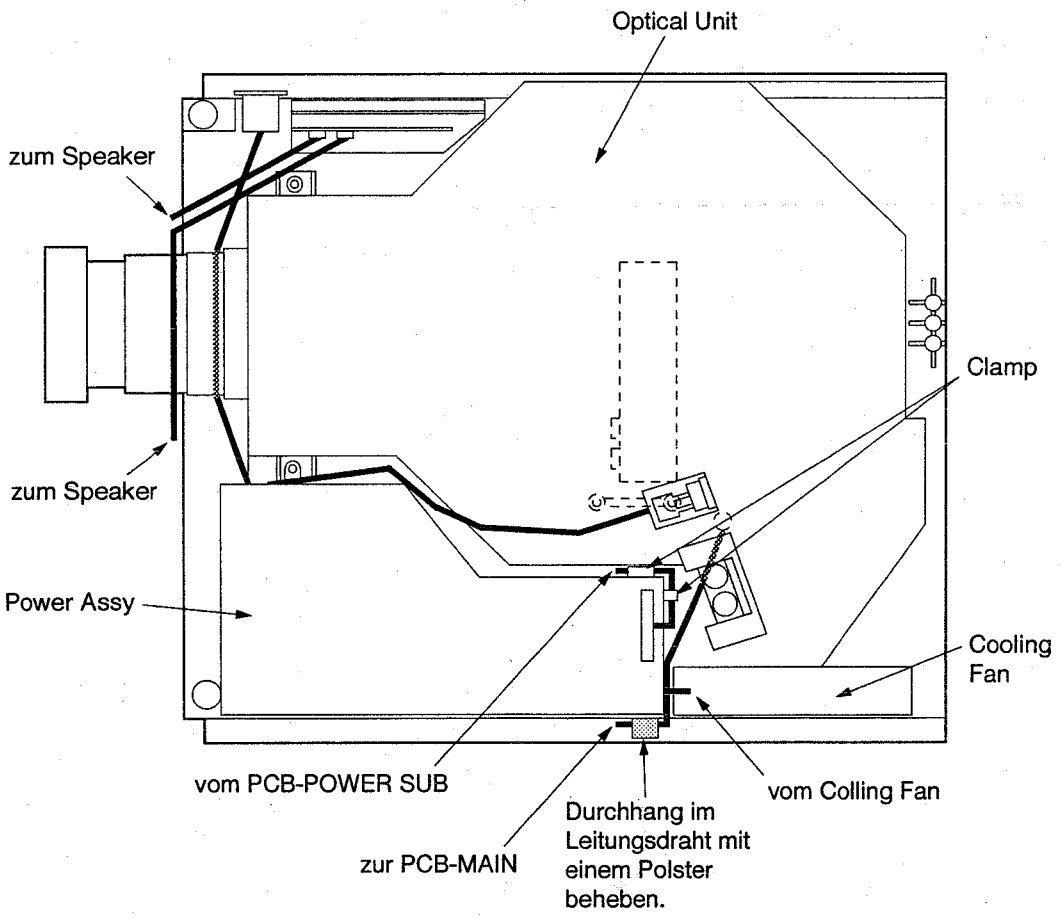

Abb. 3-3

Verlegung der Leitungsdrähte, wenn die Haupt-Leiterplatte (PCB-MAIN) und die Kartenabschirmabdeckung (Card Shield Cover) eingestellt wurden

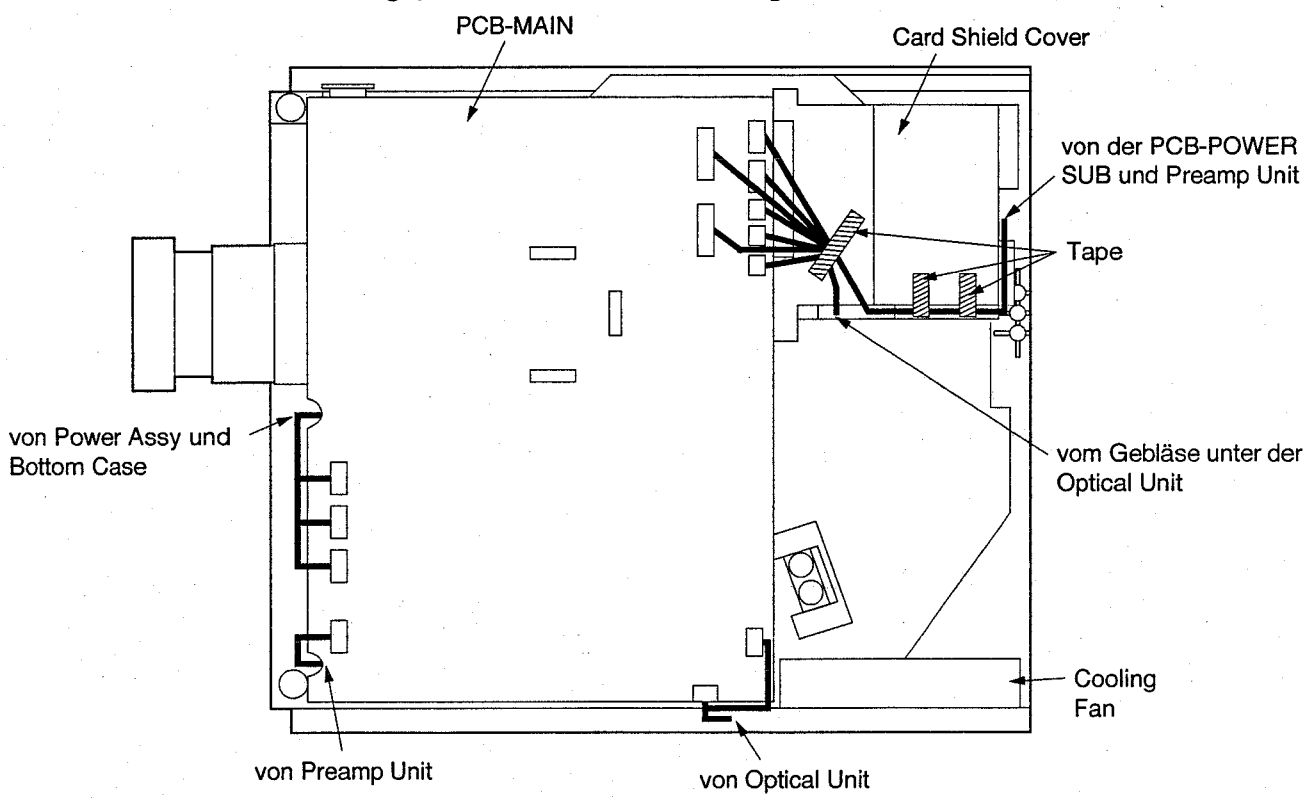

Abb. 3-4

WECHSELN DER LAMPE

Die Lampe ist in diesem Gerät eingebaut, um das Licht auf das LCD-Kontrolldisplay zu projizieren. Wenn die Lampe nicht mehr funktioniert, wechseln Sie sie gegen eine neue aus, um eine maximale Leistung zu gewährleisten.

⚠ Hinweise:

- Entfernen Sie die Lampe im dem Innern des Geräts nicht direkt nach Verwendung des Projektors, denn Sie könnten sich aufgrund der hohen Temperatur der Lampe verbrennen.
- Zum Auswechseln der Lampe betätigen Sie die Ein-/Aus-Taste, um das Gerät auszuschalten, und warten 90 Sekunden im Standby-Modus, damit sich die Lampe und das LCD-Kontrolldisplay abkühlen, dann schalten Sie den Hauptschalter aus, ziehen den Netzstecker heraus und warten noch dreißig Minuten, bis sich die Lampe kühl anfaßt.
- Entfernen Sie die Lampe nur zum Auswechseln. Eine nachlässige Behandlung kann zu Verletzungen oder Feuer führen.
- Berühren Sie die Lampe nicht direkt. Sie könnte zerbrechen und Verletzungen verursachen oder Sie könnten sich verbrennen.
- Stellen Sie sicher, daß die Schraube der Lampenabdeckung nicht in den Projektor fällt. Sorgen Sie auch dafür, daß kein Metall oder entzündliche Gegenstände in den Projektor gelangen, denn sie könnten Feuer oder Elektroschocks verursachen. Sollten dennoch Gegenstände irgendwelcher Art in den Projektor gelangen, ziehen Sie den Stecker heraus und wenden Sie sich an Ihren Händler.
- Schrauben Sie die Lampe fest ein, damit kein Feuer entsteht.
- **für den Wartungstechniker**
  Immer die Top Cover Assy und das Top Case getrennt am Produkt anbringen.
  Wenn diese Teile zusammen angebracht werden, kann es sein, daß der explosionsfester Verschluß nicht richtig arbeitet. Das Gerät darf in diesem Zustand nicht eingeschaltet werden, oder die Lampe kann explodieren.

1. Die Schraube des Lampendeckels auf der oberen Abdeckung mit einem Schraubendreher (–) und den Deckel abnehmen.

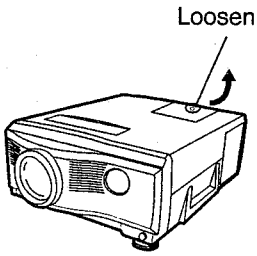

Wichtig:
Vorsichtig vorgehen, damit das an diesem Gerät angeschlossene Elektrikdraht nicht beschädigt wird.

2. Die drei Schraubenen (a) des fixierende Metalls mit einem Schraubendreher (+) lösen und abnehmen.
   Das fixierende Metall und die Schrauben nicht verlieren.

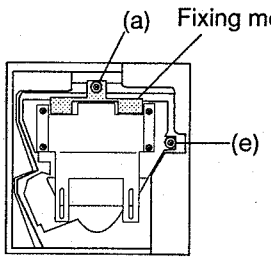

3. Das Lampen-Austauschmetall in den Projektor einsetzen.
   1) Die Metallverbinder für den Lampenaustausch in die folgende Position einfügen: auf der Vorderseite der Lampe (2 Positionen), zwischen der Lampe und an den Unterkanten (4 Positionen).
   2) Schraubenlöcher (c) mit dem Knotenpunkt (d) ausrichten.
   3) Das Stück mit den zwei beigefügten Schrauben (b, b') in Position befestigen.

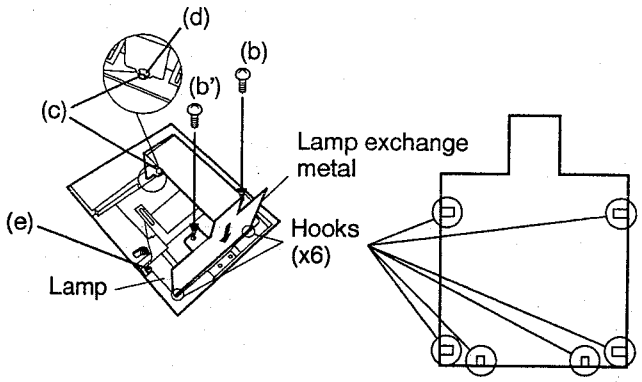

4. Die Befestigungsschraube (e) der Lampe mit einem Schraubendreher (+) lösen und abnehmen.

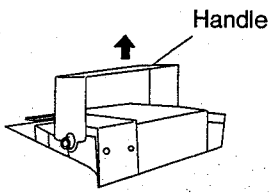

5. Wenn die Lampe herausgezogen wird, den Griff am Projektor festhalten. Keine Flüssigkeit über die herausgenommenen Lampe gießen, legen Sie sie nicht neben brennbaren Objekten und bewahren Sie sie für Kinder unzugänglich auf. Anderenfalls kann es zu Verletzungen oder Bränden kommen.

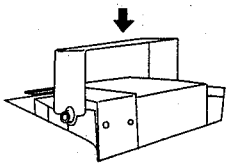

6. Die neue Lampe sicher und in der richtigen Richtung in das Projektorgehäuse einfügen.

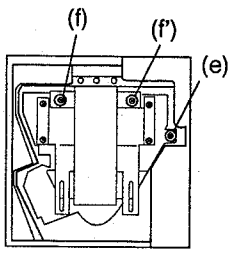

7. Die Schrauben (e), die in Schritt 4 entfernt wurde, mit einem Schraubendreher (+) festziehen.

8. Die beiden Schrauben (f), (f') des Auswechselmetals der Lampe mit einem Schraubendreher lösen und sie mit dem Metall entnehmen.

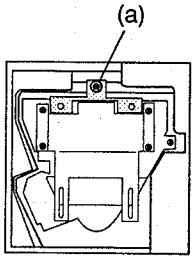

DEUTSCH

9. Die Löcher von den Lampenaustauschmetallverbindern (c) vom Knotenpunkt (d) entfernen.

10. Die festen Metallstücke aus Schritt 2 in die Schraubenlöcher (f) und (f') einfügen, und mit einer Schraube (a) das Stück in Position halten.

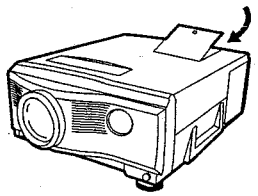

11. Befestigen Sie die Schraube der Lampenabdeckung mit einem Schraubenzieher (–).

Wie der Betriebszeitmesser rückgesetzt wird Stecken
Sie das Netzkabel wieder ein, schalten Sie den Projektor an und stellen Sie die Lampenzeit wieder ein, indem Sie gleichzeitig die Tasten FINE < , > und POWER betätigen.

⚠ **Wichtig:**
- Ersctzen Sie die Lampe durch den greichen Typ.
- Berühren Sie die Lampe oder den Reflexspiegel nicht und über Sie keinen Druck darauf aus, da sonst Probleme wie verkürzte Funktionsdauer der Lampe, Zerbrechen der Lampe oder ein dunkles Bild auftreten könnten.

⚠ **Wichtig:**
- Der Projektor läßt sich ohne die Lampenabdeckung nicht einschalten.
- Der Betriebszeitmesser muß rückgesetzt werden, nachdem die Lampe ausgetauscht wurde.
- Den Betriebszeitmesser solange nicht rücksetzen, bis die Lampe ausgetauscht wurde.

Lebensdauer der Lampe
Die durchschnittliche Lebensdauer der Lampe für den Projektor liegt bei 1.000 Stunden bei ununterbrochenem Betrieb. Die Spanne der Lebensdauer ist entsprechend der Betriebsumgebung unterschiedlich und kann kürzer als 1.000 Stunden sein. Eine Verringerung in der Lumineszenz und/oder in der Bildhelligkeit zeigt an, daß die Lichtquellenlampe ausgetauscht werden muß. Wenn die Lampenbetriebszeit 1.000 Stunden übersteigt, blinkt die Anzeige (während des Lampenbetriebs; ist die Lampe nicht in Betrieb, erscheint die Anzeige nur in Rot) abwechselnd Grün und Rot auf. Wurde die Lampe mehr als 1.250 Stunden betrieben, erscheint die Mitteilung "LAMP!" auf dem Bildschirm. Wurde die Lampe mehr als 1.300 Stunden betrieben, wird der Projektor aus Sicherheitsgründen für die Lampe automatisch ausgeschaltet und die Spannungsanzeige leuchtet Rot. Der Projektor kann nicht betrieben werden, bis die Lampe ausgetauscht wurde.

⚠ **Vorsicht:**
- Die Lampe ist empfindlich. Achten Sie darauf, daß Sie sich nicht mit Splittern schneiden.
- Die Funktionsdauer der Lampe ist von der Umgebung abhängig. Ersatzlampen finden Sie bei Ihrem Händler.

Der Projektor schaltet sich automatisch aus, wenn die Lampe nach ca. 1300 Stunden verbraucht ist, und kann erst wieder verwendet werden, nachdem die Lampe ersetzt wurde.

DEUTSCH

SCHARFEINSTELLUNG DES OBJEKTIVS

Nach dem Austausch der Objektiveinheit (Lens Unit) oder des LCD-Blocks (LCD Block), die folgende Einstellung ausführen. Die Objektiveinheit (Lens Unit) befestigen, um optimale Scharfeinstellung zu erhalten, wenn vollständig aus- und eingezoomt wird.

1. Die vier Befestigungsschrauben der Objektiveinheit (Lens Unit) lösen. Die Schrauben in der Mitte der Schraubenlöcher (elliptisch) anordnen.
2. Die FOCUS/ZOOM-Taste drücken, um "ZOOM" auf dem Bildschirm anzuzeigen.
3. Die "ADJUST+"-Taste drücken, um vollständig auszuzoomen (auf das kleinste Bild).
4. Die Pixel auf dem Bildschirm scharfeinstellen.
5. "ZOOM" auf dem Bildschirm anzeigen. Die "ADJUST-"-Taste drücken, um vollständig einzuzoomen (auf das größte Bild).
6. Einen Minus-Schraubendreher [gleichwertig zu einer Größe von 0,24 × 4 Zoll (6 × 100 mm)] in das dreieckige Loch für die Nachführeinstellung einführen. Den Schraubendreher drehen, um die Pixel auf dem Bildschirm optimal scharf einzustellen. Die Objektiveinheit (Lens Unit) wird nach vorne und rückwärts bewegt, wenn der Schraubendreher gedreht wird.
7. "ZOOM" auf dem Bildschirm anzeigen. Die "ADJUST+"-Taste drücken, um vollständig auszuzoomen.
8. Die Scharfeinstellung überprüfen. Falls die Scharfeinstellung optimiert ist, ist diese Einstellung beendet. Wenn nicht, diese Einstellung erneut ab Schritt 4 durchführen.
9. Die vier Schrauben festziehen (Anzugsmoment 14±2 kg·m).

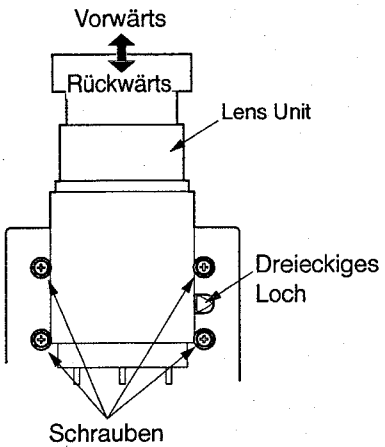

Optical Unit

ELEKTRISCHE EINSTELLUNGEN

Verwenden Sie das Kommunikationsprogramm [Hyper Terminal] der Microsoft® Windows® 95 Betriebssystems für die einzelnen Schaltkreiseinstellungen dieses Produkts.

❑Erforderliche Ausrüstung und Anschlüsse

Die folgede Ausrüstung gemäß rechter Abbildung anschließen.

- LVP-X200E
- Personal Computer (mit Microsoft® Windows® 95 Betriebssystem)
- RS-232C Kabel
- XGA-Signalgenerator (gleichwertig zu VG-814)
- NTSC-Signalgenerator
- PAL-Signalgenerator
- Monitor für Personal Computer

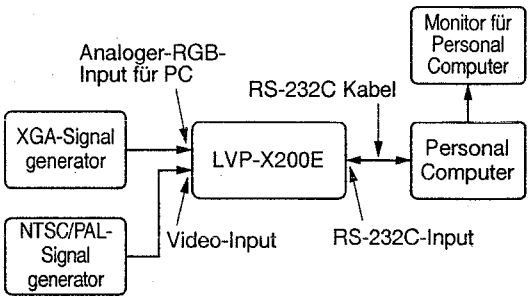

❑Testsignal

- NTSC-Farbbalkensignal (Bildaustastsynchronsignal)
- PAL-Farbbalkensignal (Bildaustastsynchronsignal)
- XGA-Signal (Horizontalfrequenz 60Hz)

Die Zeitsteuerung und die Muster für die Einstellung sind wie folgt:

Horizontale Zeitsteuerung

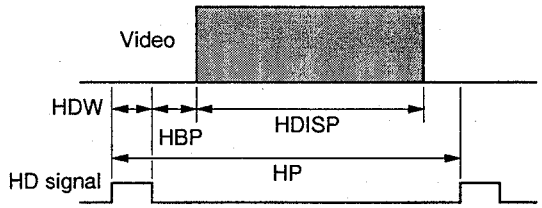

Vertikale Zeitsteuerung

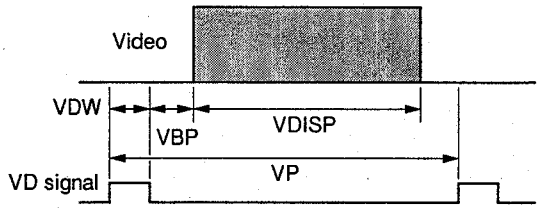

Programm-ROM: LC6 Ver. 1.1

Programm -Nr.	Muster
01	Weißraster 100%
12	Weißraster 50%
15	Jede zweite horizontale Linie (rot)
16	Jede zweite horizontale Linie (grün)
17	Jede zweite horizontale Linie (blau)
35	SMTPE (rot)
36	SMTPE (grün)
37	SMTPE (blau)

Zeitsteuerung des XGA-Signals (Horizontalfrequenz 60Hz)

DOT-CLOCK [MHz]	65.0	VP [H]	806
HP [DOT]	1344	VDISP [H]	768
HDISP [DOT]	1024	VDW [H]	6
HDW [DOT]	136	VBP [H]	29
HBP [DOT]	160	Zeilensprung	—
		Signal-Polarität	HD : –, VD : –

❑ Einstellung mit Microsoft® Windows® 95 Betriebssystem

1. Starten

1. Windows® 95 starten.
2. Den [Accessories]-Ordner doppelt anklicken.
3. Den [Hyper Terminal]-Ordner doppelt anklicken.
4. Das [HyperTrm]-Icon doppelt anklicken.

2. Hyper Terminal-Einstellung

1. [Properties] in dem File-Menü des Hyper Terminal-Fensters anklicken.
   Das [Connection Properties]-Fenster wird geöffnet. Die Einstellung in diesem Fenster wie folgt vornehmen.
2. [Connecting] in dem Kommunikationsmenü in dem Fenster anklicken, um den LVP-X200E anzuschließen.

Benennung		Einstellung
Comm. Port		Port (COM1-COM4)
Port setting	: Bit/sec	9600
	: Data bit	8 bit
	: Parity	None
	: Stop bit	1
	: Flow control	Hardware
Setting	: Emulation	VT100
ASCII setting	: Sending ASCII	Put a line feed character at the end of the line
		Local echo
		Delay (Line) : 1000msec.
		Delay (Character) : 10msec.
	: Receiving ASCII	Put a line feed character at the end of received data

3. Einstellung

Den Einstellungsbefehl und den Einstellungswert in dem Hyper Terminal-Fenster in Großbuchstaben über die Tastatur eingeben und die Neuzeilentaste (Enter) drücken.

4. Schreiben des Einstellungswertes

Den Schreibbefehl und den Einstellungswert in dem Hyper Terminal-Fenster in Großbuchstaben über die Tastatur eingeben und die Neuzeilentaste (Enter) drücken.

Hinweis: Dieser Vorgang ist nicht für die Einstellung 2 (Klemmpegel) und 3 (A/D-Wandler) der automatischen Einstellung erforderlich.

5. Schließen des Fensters

Die oben rechts an dem Fenster angeordnete Schließtaste anklicken, um Hyper Terminal zu schließen.
Windows® 95 schließen, nachdem alle geöffneten Fenster geschlossen wurden.

Einstellvorgänge

[Lampen-Betriebsstromkreis] 1. Lampenstromquellen-Stärke	**Einstellzweck:**	Zum Einstellen des zur Lampe angelegten Betriebsstroms auf den richtigen Wert.
	Symptom bei falscher Einstellung:	Die Lampe brennt nicht mit der vorgeschriebenen Helligkeit, oder die Lampe kann explodieren.

Meßinstrumente	Amperemeter, Voltmeter
Prüfpunkt	Lampenstromausgang
EXT-Trigger	-----
Meßbereich	-----
Eingangssignal	-----
Eingangsklemme	-----

* Diese Einstellung innerhalb von 1 Minute nach dem Einschalten des Produktes beenden.

1. Den lamp box und die main shield cover vom Produkt entfernen.
2. Ein Amperemeter, ein Voltmeter und einen Scheinlast-Widerstand (nicht-induktiver Widerstand 12Ω 350 W) mit dem Lampenausgang anschließen, wie in der Abbildung gezeigt.
3. Das Produkt einschalten.
4. VR9V0 (PCB-LAMP POWER) so einstellen, daß der Ausgang 338±2 W beträgt (Spannung 64V, Stromstärke 5,28A, so daß der Bereich eingehalten wird, wie in der folgenden Tabelle und Kurve gezeigt). VR9V0 mit der Einstellöffnung an der PCB-MAIN einstellen.

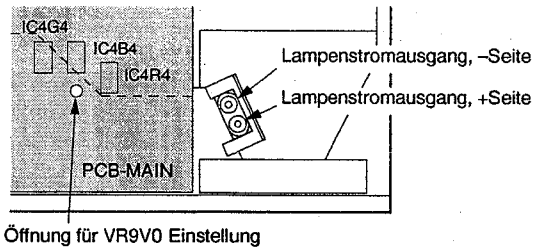

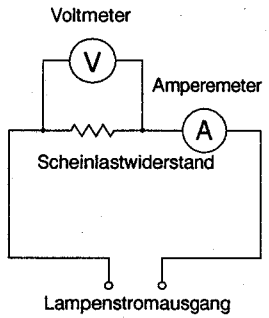

Meßinstrumentenanschluß

Zusammenfassungstabelle für Einstellung

Spannung V	Stromstärke A (max)	Stromstärke A (min)
63.60	5.35	5.28
63.65	5.34	5.28
63.70	5.34	5.27
63.75	5.33	5.27
63.80	5.33	2.27
63.85	5.32	5.26
63.90	5.32	5.26
63.95	5.32	5.25
64.00	5.31	5.25
64.05	5.31	5.25
64.10	5.30	5.24
64.15	5.30	5.24
64.20	5.30	5.23
64.25	5.29	5.23
64.30	5.29	5.23
64.35	5.28	5.22
64.40	5.28	5.22
64.45	5.28	5.21
64.50	5.27	5.21
64.55	5.27	5.21
64.60	5.26	5.20

Lampenbetriebsstrom-Einstellbereich

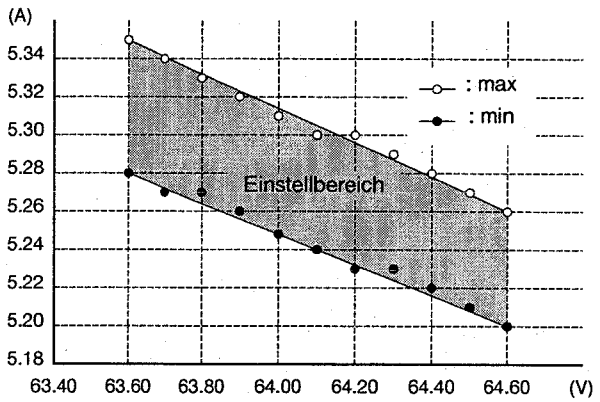

DEUTSCH

[A/D-Vorverstärker-Schaltkreis] 2. Klemmpegel	**Einstellzweck:**	Einstellen des Gleichstrompegels des Bildsignals, das in den A/D-Wandler eingegeben wird.
	Symptom bei falscher Einstellung:	Schwarzweiß-Bild weist Farbton auf.

Meßinstrumente	—
Prüfpunkt	—
EXT-Trigger	—
Meßbereich	—
Eingangssignal	XGA-Signal (Weiß 100%, Nr. 01)
Eingangsklemme	Analoger-RGB-Input für PC

* Den Einstellbefehl mit Großbruchstaben und Zahlen eingeben.

1. Den LVP-X200E mit einem Personal Computer (mit Microsoft® Windows® 95 Betriebssystem) verbinden (siehe Abbildung auf Seite 11).
2. Microsoft® Windows® 95 in dem Personal Computer starten.
3. Das Kommunikationsprogramm [Hyper Terminal] in Microsoft® Windows® 95 starten, um das Fenster zu öffnen. (Für die Einstellung siehe "Hyper Terminal-Einstellung" auf Seite 12.)
4. Auf den normalen Modus in dem Hauptmenü dieses Produktes zurückstellen.

RGB

5. Ein XGA-Signal (Weiß 100%, Nr. 01) anlegen.
6. [00~70] (RGB-Eingangsklemmungs-Einstellungsbefehl) in das Hyper Terminal-Fenster eingeben, worauf die automatische Einstellung beginnt.
7. Der Rückkehrbefehl [00~70111] erscheint im Hyper Terminal-Fenster nach der Einstellung.
   Die letzten 3 Stellen des Rückkehrbefehls zeigen das Ergebnis der Einstellung an, und jede Ziffer entspricht der Reihe nach R, G und B. Die Ziffer 1 bedeutet, daß die Einstellung erfolgreich war. Die Ziffer 0 bedeutet, daß die Einstellung erfolglos war, aufgrund von Leiterplattenfehlern, falschen Signalen oder falscher Eingangswahl.

VIDEO

8. Ein NTSC-Signal (Farbbalken) an die Video-Eingangsklemme anlegen.
9. [00~71] (VIDEO-Eingangsklemmungs-Einstellungsbefehl) in das Hyper Terminal-Fenster eingeben, worauf die automatische Einstellung beginnt.
10. Der Rückkehrbefehl [00~7111] erscheint im Hyper Terminal-Fenster nach der Einstellung.
    Die letzten 2 Stellen des Rückkehrbefehls zeigen das Ergebnis der Einstellung an, und jede Ziffer entspricht R-Y und B-Y. Die Ziffer 1 bedeutet, daß die Einstellung erfolgreich war. Die Ziffer 0 bedeutet, daß die Einstellung erfolglos war, aufgrund von Leiterplattenfehlern, falschen Signalen oder falscher Eingangswahl.

[A/D-Vorverstärker-Schaltkreis] 3. A/D-Wandler	**Einstellzweck:**	Einstellen der Amplitude des Videosignals, das in den A/D-Wandler eingegeben wird.
	Symptom bei falscher Einstellung:	Schwarzweiß-Bild weist Farbton auf.

Meßinstrumente	—
Prüfpunkt	—
EXT-Trigger	—
Meßbereich	—
Eingangssignal	XGA-Signal (Weiß 100%, Nr. 01)
Eingangsklemme	Analoger-RGB-Input für PC

* Den Einstellbefehl mit Großbruchstaben und Zahlen eingeben.

1. Den LVP-X200E mit einem Personal Computer (mit Microsoft® Windows® 95 Betriebssystem) verbinden (siehe Abbildung auf Seite 11).
2. Microsoft® Windows® 95 in dem Personal Computer starten.
3. Das Kommunikationsprogramm [Hyper Terminal] in Microsoft® Windows® 95 starten, um das Fenster zu öffnen. (Für die Einstellung siehe "Hyper Terminal-Einstellung" auf Seite 12.)
4. Auf den normalen Modus in dem Hauptmenü dieses Produktes zurückstellen.
5. Ein XGA-Signal (Weiß 100%, Nr. 01) anlegen.
6. [00~5] (A/D-Einstellbefehl) in das Hyper Terminal-Fenster eingeben, worauf die automatische Einstellung beginnt.
7. Der Rückkehrbefehl [00~5111] erscheint im Hyper Terminal-Fenster nach der Einstellung.
   Die letzten 3 Stellen des Rückkehrbefehls zeigen das Ergebnis der Einstellung an, und jede Ziffer entspricht der Reihe nach R, G und B. Die Ziffer 1 bedeutet, daß die Einstellung erfolgreich war. Die Ziffer 0 bedeutet, daß die Einstellung erfolglos war, aufgrund von Leiterplattenfehlern, falschen Signalen oder falscher Eingangswahl.

[Flüssigkristallanzeige-Treiberkreis-Einstellung] 4. Geisterbilder-Einstellung	**Einstellzweck:** Entfernen der Geisterbilder von dem Bildschirm. **Symptom bei falscher Einstellung:** Geisterbilder erscheinen nach jeweils 12 Bildelementen.

Meßinstrumente	—
Prüfpunkt	—
EXT-Trigger	—
Meßbereich	—
Eingangssignal	XGA-Signal (SMTPE(R), Nr. 35)
Eingangsklemme	Analoger-RGB-Input für PC

* Diese Einstellung nur dann ausführen, wenn Geisterbilder störend auf dem Bildschirm erscheinen.
* Den Einstellbefehl mit Großbruchstaben und Zahlen eingeben.

1. Den LVP-X200E mit einem Personal Computer (mit Microsoft® Windows® 95 Betriebssystem) verbinden (siehe Abbildung auf Seite 11).
2. Microsoft® Windows® 95 in dem Personal Computer starten.
3. Das Kommunikationsprogramm [Hyper Terminal] in Microsoft® Windows® 95 starten, um das Fenster zu öffnen. (Für die Einstellung siehe "Hyper Terminal-Einstellung" auf Seite 12.)
4. Auf den normalen Modus in dem Hauptmenü dieses Produktes zurückstellen.
5. Die Bilder auf den Bildschirm projizieren.

Rot

6. Ein XGA-Signal (SMTPE(R), Nr. 35) anlegen.
7. Die zu projizierende Signalquelle in monochromem Rot auf den Bildschirm projizieren.
8. Den Einstellungsbefehl [00~3123 □□] in das Hyper Terminal-Fenster eingeben, um die roten Geisterbilder zu minimieren. Die Werte [99], [AA], [BB], [CC] oder [DD] auf □□ stellen, um Geisterbilder zu minimieren. [BB] wurde vor der Einstellung auf □□ gestellt.
   (*1) Wenn der Senden-Befehl erscheint, wird der Sendevorgang richtig ausgeführt. Der aktuelle Wert kann bestätigt werden, indem der Sendebefehl gegeben wird, ohne das ein Wert auf □□ eingegeben wird.
9. Den Befehl zum Schreiben [00~1E93 □□] zum Hyper Terminal-Fenster eingeben, und den neuen geäderten Wert zum EEPROM schreiben. Der Wert von Schritt 8 zu □□ eingeben. (*1)

Grün

10 Ein XGA-Signal (SMTPE(G), Nr. 36) anlegen.
11. Die zu projizierende Signalquelle in monochromem Grün auf den Bildschirm projizieren.
12. Den Einstellungsbefehl [00~3223 □□] in das Hyper Terminal-Fenster eingeben, um die grünen Geisterbilder zu minimieren. Die Werte [99], [AA], [BB], [CC] oder [DD] auf □□ stellen, um Geisterbilder zu minimieren. [BB] wurde vor der Einstellung auf □□ gestellt. (*1)
13. Den Befehl zum Schreiben [00~1EAA □□] zum Hyper Terminal-Fenster eingeben, und den neuen geäderten Wert zum EEPROM schreiben. Der Wert von Schritt 12 zu □□ eingeben. (*1)

Blau

14 Ein XGA-Signal (SMTPE(B), Nr. 37) anlegen.
15. Die zu projizierende Signalquelle in monochromem Blau auf den Bildschirm projizieren.
16. Den Einstellungsbefehl [00~3323 □□] in das Hyper Terminal-Fenster eingeben, um die blauen Geisterbilder zu minimieren. Die Werte [99], [AA], [BB], [CC] oder [DD] auf □□ stellen, um Geisterbilder zu minimieren. [BB] wurde vor der Einstellung auf □□ gestellt. (*1)
17. Den Befehl zum Schreiben [00~1EC1 □□] zum Hyper Terminal-Fenster eingeben, und den neuen geäderten Wert zum EEPROM schreiben. Der Wert von Schritt 16 zu □□ eingeben. (*1)

[Flüssigkristallanzeige-Treiberkreis-Einstellung] 5. Vertikalen Linien	**Einstellzweck:**	Entfernen der vertikalen Linien von dem Bildschirm.
	Symptom bei falscher Einstellung:	Vertikale Linien erscheinen alle 12 Bildelemente.

Meßinstrumente	---
Prüfpunkt	---
EXT-Trigger	---
Meßbereich	---
Eingangssignal	XGA-Signal (Weiß 50%, Nr. 12)
Eingangsklemme	Analoger-RGB-Input für PC

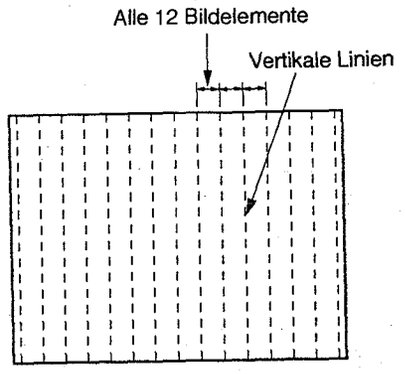

* Diese Einstellung nur ausführen, wenn vertikale Linien störend auf dem Bildschirm erscheinen.
* Den Einstellbefehl mit Großbruchstaben und Zahlen eingeben.

1. Den LVP-X200E mit einem Personal Computer (mit Microsoft® Windows® 95 Betriebssystem) verbinden (siehe Abbildung auf Seite 11).
2. Microsoft® Windows® 95 in dem Personal Computer starten.
3. Das Kommunikationsprogramm [Hyper Terminal] in Microsoft® Windows® 95 starten, um das Fenster zu öffnen. (Für die Einstellung siehe "Hyper Terminal-Einstellung" auf Seite 12.)
4. Auf den normalen Modus in dem Hauptmenü dieses Produktes zurückstellen.
5. Ein XGA-Signal (Weiß 50%, Nr. 12) anlegen.
6. Die Bilder auf den Bildschirm projizieren.
7. Den Einstellungsbefehl [00~227 □□] in das Hyper Terminal-Fenster eingeben, um die vertikalen Linien zu minimieren. Einen beliebigen Wert von [10h] bis [FFh] in □□ eingeben, um minimale vertikale Linien zu erhalten. Vor der Einstellung wurde [10h] in □□ eingeschrieben.
   (*1) Wenn der Senden-Befehl erscheint, wird der Sendevorgang richtig ausgeführt. Der aktuelle Wert kann bestätigt werden, indem der Sendebefehl gegeben wird, ohne daß ein Wert auf □□ eingegeben wird.
8. Den Befehl zum Schreiben [00~1F2B □□] zum Hyper Terminal-Fenster eingeben, und den neuen geäderten Wert zum EEPROM schreiben. Der Wert von Schritt 7 zu □□ eingeben. (*1)

DEUTSCH

[Flüssigkristallanzeige-Treiberkreis-Einstellung] 6. Flimmer	**Einstellzweck:**	Entfernen von Flimmer von dem Bildschirm.
	Symptom bei falscher Einstellung:	Flimmer erscheint.

Meßinstrumente	---
Prüfpunkt	---
EXT-Trigger	---
Meßbereich	---
Eingangssignal	XGA-Signal (Horizontale Linie jedes zweite rote Bildelement, Nr. 15)
Eingangsklemme	Analoger-RGB-Input für PC

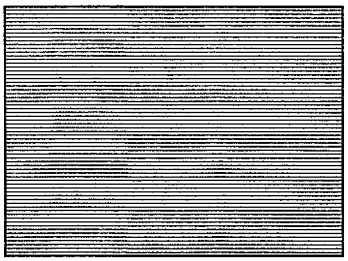

Horizontale Linie jedes zweite Bildelement

* Diese Einstellung nur ausführen, wenn das Flimmern störend auf dem Bildschirm erscheint.
* Den Einstellbefehl mit Großbruchstaben und Zahlen eingeben.

1. Den LVP-X200E mit einem Personal Computer (mit Microsoft® Windows® 95 Betriebssystem) verbinden (siehe Abbildung auf Seite 11).
2. Microsoft® Windows® 95 in dem Personal Computer starten.
3. Das Kommunikationsprogramm [Hyper Terminal] in Microsoft® Windows® 95 starten, um das Fenster zu öffnen. (Für die Einstellung siehe "Hyper Terminal-Einstellung" auf Seite 12.)
4. Auf den normalen Modus in dem Hauptmenü dieses Produktes zurückstellen.

Rot

5. Ein XGA-Signal anlegen (horizontale Linie jedes zweite rote Bildelement, Nr. 15).
6. Die Bilder auf den Bildschirm projizieren.
7. Den Einstellungsbefehl [00~229 □□] in das Hyper Terminal-Fenster eingeben, um das rote Flimmern zu minimieren. Einen beliebigen Wert von [00h] bis [FFh] in □□ eingeben, um minimales Flimmern zu erhalten. Vor der Einstellung wurde [A0h] in □□ eingeschrieben.
   (*1) Wenn der Senden-Befehl erscheint, wird der Sendevorgang richtig ausgeführt. Der aktuelle Wert kann bestätigt werden, indem der Sendebefehl gegeben wird, ohne daß ein Wert auf □□ eingegeben wird.
8. Den Befehl zum Schreiben [00~1F2D □□] zum Hyper Terminal-Fenster eingeben, und den neuen geäderten Wert zum EEPROM schreiben. Der Wert von Schritt 7 zu □□ eingeben. (*1)

Grün

9. Ein XGA-Signal anlegen (horizontale Linie jedes zweite grüne Bildelement, Nr. 16).
10. Den Einstellungsbefehl [00~22A □□] in das Hyper Terminal-Fenster eingeben, um das grüne Flimmern zu minimieren. Einen beliebigen Wert von [00h] bis [FFh] in □□ eingeben, um minimales Flimmern zu erhalten. Vor der Einstellung wurde [A0h] in □□ eingeschrieben. (*1)
11. Den Befehl zum Schreiben [00~1F2E □□] zum Hyper Terminal-Fenster eingeben, und den neuen geäderten Wert zum EEPROM schreiben. Der Wert von Schritt 10 zu □□ eingeben. (*1)

Blau

12. Ein XGA-Signal anlegen (horizontale Linie jedes zweite blaue Bildelement, Nr. 17).
13. Den Einstellungsbefehl [00~22B □□] in das Hyper Terminal-Fenster eingeben, um das blaue Flimmern zu minimieren. Einen beliebigen Wert von [00h] bis [FFh] in □□ eingeben, um minimales Flimmern zu erhalten. Vor der Einstellung wurde [A0h] in □□ eingeschrieben. (*1)
14. Den Befehl zum Schreiben [00~1F2F □□] zum Hyper Terminal-Fenster eingeben, und den neuen geäderten Wert zum EEPROM schreiben. Der Wert von Schritt 13 zu □□ eingeben. (*1)

LED-FEHLERANZEIGE

Dieses Gerät ist mit einer Selbstdiagnose-Funktion ausgestattet. Im Falle von anormalen Zuständen zeigt die LED oben am Gerät den Fehlerzustand an.

Diagnosemethode : Bei jedem Einschalten der Betriebsstromversorgung wird der Schalter eingeschaltet, und jeder Sensor wird in 4 Sekunden auf Fehler geprüft. Die POWER LED leuchtet während der Prüfung rot auf.

Diagnoseergebnis-Anzeige : Die LED-Anzeigen und Fehler werden in der folgenden Tabelle gezeigt. Die LED kann "automatisch" oder "durch Ein/Ausschalten des Betriebsstroms" zurückgestellt werden, wenn die Fehlererkennung beendet ist.

Gezwungenes Einschalten : Wenn das Gerät nicht eingeschaltet werden kann, weil ein STBY-Strom-Kurzschluß oder ein SW-Kurzschluß vorliegt, die 3 Tasten RGB, VIDEO und CARD oben am Gerät gleichzeitig während der 4 Sekunden der Sensorprüfung drücken, um das Gerät für Fehlererkennung einzuschalten. In diesem Fall arbeiten Schutzschaltkreise ausgenommen solche für STBY-STBY-Strom-Kurzschluß und SW-Kurzschluß.

LED-Fehleranzeigeliste

Preferentielle Reihenfolge	Fehler	Symptom	Zweck	LED-Anzeige					Rückstellen
				POWER	LAMP	TEMP	CARD1	CARD2	
1	STBY-Strom-Kurzschluß	Kein Einschalten	Fehlererkennung	Rot/Grün abwechselnd	Orange	Rot blinkt 2	*	*	Haupt
2	SW-Kurzschluß	Kein Einschalten	Fehlererkennung	Rot/Grün abwechselnd	Orange	Rot blinkt	*	*	Haupt
3	Gebläse stoppt (Optik-Einheit)	Kein Einschalten	Fehlererkennung	Rot/Grün abwechselnd	Rot	Rot blinkt 3	*	*	Haupt
4	Gebläse stoppt (Ablaß)	Kein Einschalten	Fehlererkennung	Rot/Grün abwechselnd	Rot	Rot blinkt 2	*	*	Haupt
5	Gebläse stoppt (Einlaß)	Kein Einschalten	Fehlererkennung	Rot/Grün abwechselnd	Rot	Rot blinkt	*	*	Haupt
6	Gebläse stoppt (Strom)	Kein Einschalten	Fehlererkennung	Rot/Grün abwechselnd	Rot	Rot blinkt 4	*	*	Haupt
7	LBOX offen	Kein Einschalten	Gefahr-Verhinderung	Rot/Grün abwechselnd	–	–	*	*	Auto
8	FBOX offen	Kein Einschalten	Staubeinlaß-Verhinderung	Rot/Grün abwechselnd	–	–	*	*	Auto
9	Abgezogener Thermistor (Ablaß)	Kein Einschalten	Fehlererkennung	Rot/Grün abwechselnd	–	Rot blinkt	*	*	Auto
10	Abgezogener Thermistor (Lampe)	Kein Einschalten	Fehlererkennung	Rot/Grün abwechselnd	–	Rot blinkt 2	*	*	Auto
11	Kommunikationsfehler zwischen Computern	Kein Einschalten	Fehlererkennung	Rot/Grün abwechselnd	Orange	Rot	*	*	Auto
12	IIC-Bus-Fehler (EEPROM)	Kein Einschalten	Fehlererkennung	Rot/Grün abwechselnd	Grün	Rot blinkt 2	*	*	Auto
13	IIC-Bus-Fehler (Decoder)	Schlechte Anzeige des VIDEO-Eingangs	Fehlererkennung	Rot/Grün abwechselnd	Grün	Rot blinkt	*	*	Auto

– : LED aus
* : Keine Bestätigung erforderlich
Orange : Sowohl Rot als auch Grün leuchten
Rot blinkt N : Der Zyklus, bei dem Rot N mal blinkt und für eine feste Zeit erlischt wird wiederholt.

LED-Fehleranzeigeliste

Preferentielle Reihenfolge	Fehler	Symptom	Zweck	LED-Anzeige					Rückstellen
				POWER	LAMP	TEMP	CARD1	CARD2	
14	Temperatursensor (Lampe)	Kein Einschalten	Temperaturanstieg	Rot	–	Rot blinkt 2	*	*	Auto
15	Temperatursensor (Einlaß)	Kein Einschalten	Temperaturanstieg	Rot	–	Rot blinkt	*	*	Auto
16	Temperatursensor (Leiterplatte)	Kein Einschalten	Temperaturanstieg	Rot	–	Rot blinkt 3	*	*	Auto
17	Lampen-Lebensdauer (1000-1300h)	Nur Warnanzeige von LED	Warnanzeige von LED Anzeige bei Bereitschaft	Rot	Rot blinkt	–	*	*	Manuell
			Warnanzeige von LED Anzeige bei Bereitschaft	Grün	Rot/Grün abwechselnd	–	*	*	Manuell
	Lampen-Lebensdauer (1300h oder mehr)	Kein Einschalten	Lampen-Lebensdauer	Rot	Rot	–	*	*	Manuell
18	Lampe leuchtet nicht	Kein Einschalten 1 Minute lang	Lampenschutz	Rot	Grün blinkt	–	*	*	Auto
19	Für 1 Minute nach Einschalten	Kein Ausschalten 1 Minute lang	Lampenschutz	Grün	Grün blinkt	–	*	*	Auto
20	Für 1 Minute nach Ausschalten	Kein Einschalten 1 Minute lang	Lampenschutz	Rot	Grün blinkt	–	*	*	Auto
21	IIC-Bus-Fehler (HIC)	Schlechte Darstellung aller Eingaben	Fehlererkennung	*	*	*	Grün blinkt	Grün blinkt	Auto
22	IIC-Bus-Fehler (EEPROM)	Kein Einschalten	Fehlererkennung	*	*	*	Grün blinkt 2	Grün blinkt 2	Auto

– : LED aus
* : Keine Bestätigung erforderlich
Orange : Sowohl Rot als auch Grün leuchten
Rot blinkt N : Der Zyklus, bei dem Rot N mal blinkt und für eine feste Zeit erlischt wird wiederholt.

DEUTSCH

INDICE

SPECIFICAZIONI 1
PRECAUZIONI PER LA SICUREZZA 1
AVVERTIMENTO 1
CONTROLLO A FREDDO DI DISPERSIONI DI CORRENTE 1
POSIZIONE DELLE PCB 2
RIMOZIONE DEI COMPONENTI 3
RIVESTIMENTO DEL CONDUTTORE DI ISOLAMENTO 7
SOSTITUZIONE DELAA LAMPADA 9
REGOLAZIONE DEL CARRELLO DELLA LENTE DI MESSA A FUOCO 10
REGOLAZIONI ELETTRICHE 11
Collegamenti e Apparecchiature Necessarie 11
Segnale di Prova 11
Regolazione con il Sistema Operativo Microsoft® Windows® 95 12
Procedure di Regolazione 13
Regolazione circuito di alimentazione lampada
1. Potenza di regolazione alimentazione lampada 13
Regolazione del Circuito di Pre-Amplificazione A/D
2. Regolazione del Livello di Bloccaggio 14
3. Regolazione del Convertitore A/D 15
Messa a punto del Circuito di Regolazione di Comando del Pannello a Cristalli Liquidi
4. Regolazione della Falsa Immagine 16
5. Regolazione della Linea Verticale 17
6. Regolazione dello Sfarfallamento 18
INDICAZIONI D'ERRORE DEL LED 19
OPTION BOARD INSTALLATION
PARTS LIST
REPACKING PROCEDURE
ELECTRICAL PARTS AND OTHERS
IC BLOCK DIAGRAM
SCHEMATIC DIAGRAM
PRINTED CIRCUIT BOARD PARTS LAYOUT

ITALIANO

MARCHI, MARCHI DEPOSITATI

Apple e Macintosh sono marchi registrati della Apple Computer Inc.
IBM, VGA, PS/2 sono marchi o marchi registrati della International Business Machines Corporation.
Microsoft®, Windows® 95 sono marchi registrati della Microsoft negli USA e in altri paesi.
Altre marche o nomi di prodotti sono marchi o marchi registrati dei rispettive proprietari.

SPECIFICAZIONI

- **Tensione di alimentazione** : AC 100~240V ; 50 / 60Hz
- **Amperaggio** : 5,0A
- **Pannelli LCD** : Pannello LCD da 1,3 pollice
  3 pezzi (per R,G,B)
  Pixel : 1024 × 768 = 786 432 pixel
  Percentuale di pixel attivi: 99,99% minimo (ogni pannello)
- **Lenti di proiezione** : F 2,3~2,7 f = 53,3~69,3 mm
- **Lampada** : 330W DC lampada agli alogenuri metallici
- **dimensione immagine** : Rapporto larghezza/altezza 4:3 40-300 pollici
- **Altoparlanti** : Tipo rotondo 60mm × 2pz.
- **Input S-Video** : Segnale luminanza : 1,0Vp-p 75 (sincr. negativa.)
  Chroma signal: 0,286Vp-p 75 (burst signal)
- **Input Video** : 1,0Vp-p 75Ω (sincr. negativa)
- **Input Audio** : 350mVrms, 10kΩ superiore
- **Input Audio PC** : 350mVrms, 10kΩ superiore
- **Input RGB Analogico** : Mini D-SUB 15P
  RGB: 0,7Vp-p 75Ω (sincr. negativa)
  YCbCr: 1,0Vp-p (Y) (sincr. negativa)
  Cb, Cr: 0,7Vp-p
  Livello HD/CS: TTL (positivo)
  Livello VD: TTL level (positivo)
- **Dimensioni esterne** : 330(L) × 145(A) × 398(P) mm
  Piedi e lenti non compresi
- **Peso** : 9,8kg
- **Lunghezza del cavo di alimentazione** : 2,9m

- Peso e dimensioni illustrate sono approssimate.
- Aspetto e dati caratteristici sono soggetti a cambiamento senza avviso.

PRECAUZIONI PER LA SICUREZZA

AVVISO : Osservare scrupolosamente tutte le precauzioni e gli avvisi per la sicurezza sistemati all'interno mobile esterno e sul telaio del proiettore.

AVVERTIMENTO

1. Un trasformatore d'isolamento dovrebbe essere usato tra il proiettore e la presa di alimentazione a c.a. prima di eseguire qualsiasi test/manutenzione su un proiettore con il telaio SOTTO TENSIONE.
2. Le operazioni su questo proiettore eseguite all'esterno del mobile contenitore oppure con la copertura rimossa, comportano il rischio di scosse elettriche dall'alimentazione elettrica del proiettore. Il lavoro sul proiettore non deve essere affidato a persone che non abbiano acquisito una conoscenza completa delle precauzioni necessarie a lavorare su apparecchiature ad alto voltaggio.
3. Quando è richiesto un intervento di assistenza tecnica, preservare scrupolosamente il rivestimento conduttore originale. Precauzioni supplementari dovrebbero essere usate per assicurare un corretto rivestimento isolante del conduttore nelle parti ad alto voltaggio. Laddove si fosse verificato un corto circuito, sostituire quei componenti che risultano surriscaldati.

CONTROLLO A FREDDO DI DISPERSIONI DI CORRENTE

Prima di restituire il proiettore al cliente, viene raccomandata la misurazione di dispersioni di corrente osservando i metodi che seguono.
Con la spina di c.a. staccata dalla presa di c.a., posizionare un ponte tra i due elettrodi della spina. Accendere l'interruttore del proiettore. Utilizzando un Tester di Isolamento 500V c.c., collegare un filo conduttore alla spina con il ponte e toccare con l'altro capo del conduttore qualsiasi parte di metallo esposta (teste di viti, ecc.), in particolare ogni parte di metallo esposta che abbia un percorso di ritorno al telaio. Parti di metallo esposte che abbiano un percorso di ritorno al telaio devono dare una lettura di resistenza minima di 4 megaohm. Una resistenza di valore inferiore sottintende un'anomalia che richiede una azione correttiva.

ITALIANO

POSIZIONE DELLE PCB

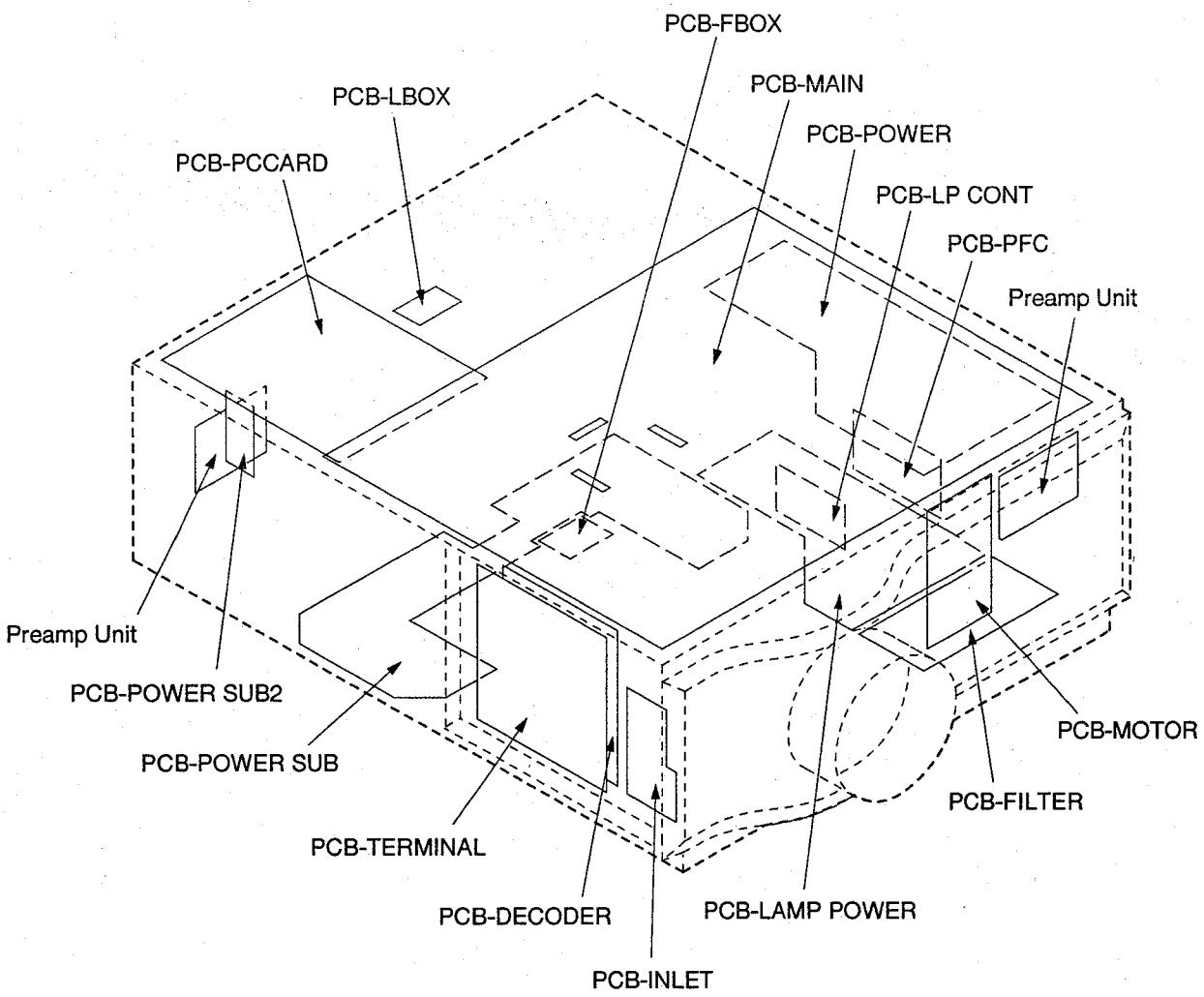

Fig. 1

ITALIANO

RIMOZIONE DEI COMPONENTI

Fare riferimento all'ELENCO DELLE PARTI per il Numero delle Parti

Nota: Non mancare di fissare separatamente all'apparecchio il Top Cover Assy e il Top Case. Se vengono installati assieme, l'otturatore esplosione-prova potrebbe non funzionare. Non accendere l'apparecchio in queste condizioni, altrimenti la lampada potrebbe esplodere.

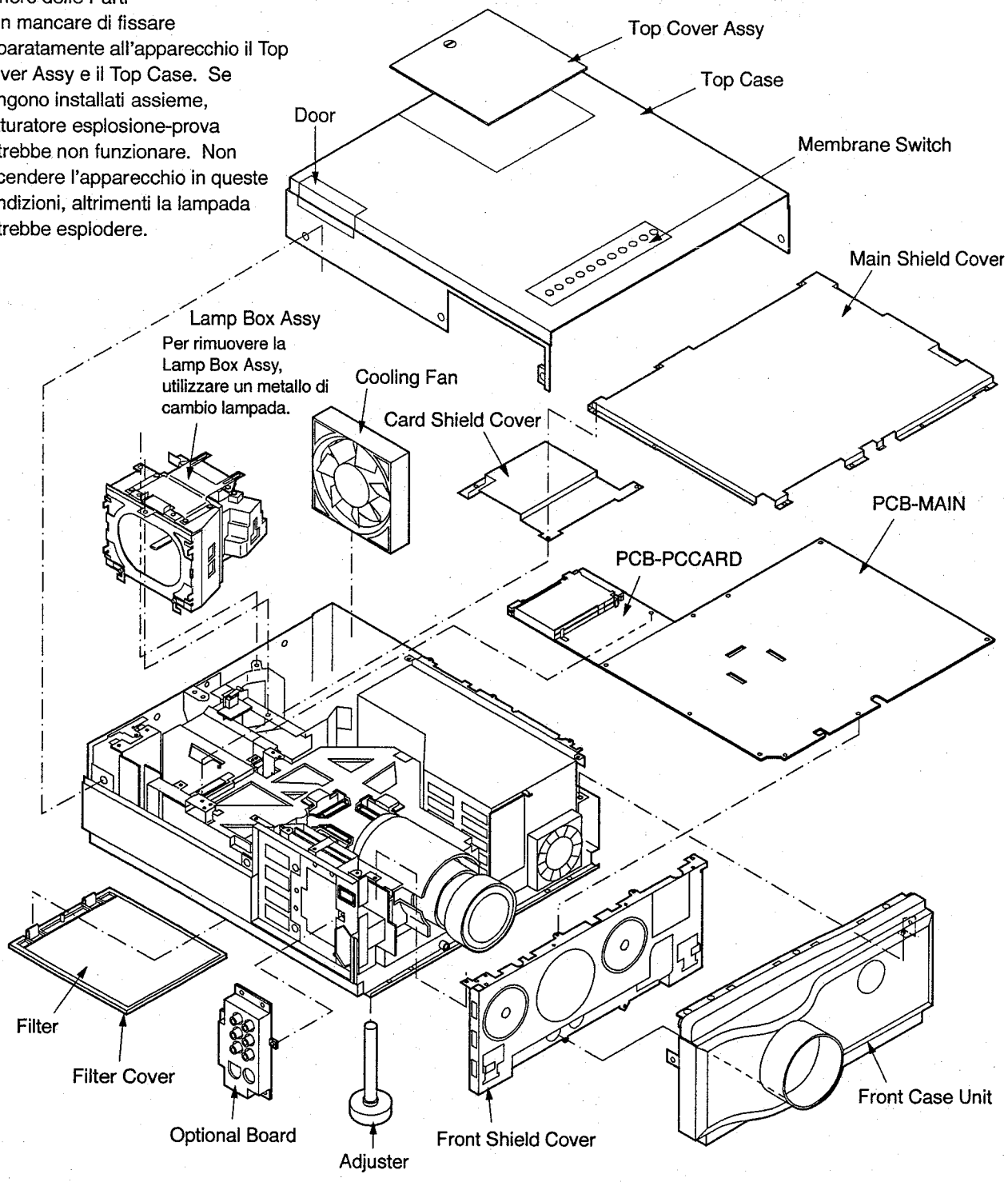

Fig. 2-1

Nome delle Parti	Numero delle Viti
Optional Board	6
Top Case	8
Top Cover Assy	1
Lamp Box Assy	2
Front Case Unit	3
Main Shield Cover	11

Nome delle Parti	Numero delle Viti
Card Shield Cover	3
PCB-MAIN	8
PCB-PCCARD	4
Front Shield Cover	5
Filter Cover	(2 Attacchi)

Numero delle Viti : Il numero delle parti che le Viti reggono.

Tabella 1-1

Fare riferimento all'ELENCO DELLE PARTI per il Numero delle Parti.
Nota: Durante il funzionamento gli operatori devono montare il nastro da polso per proteggere il LCD dall'elettricità statica.

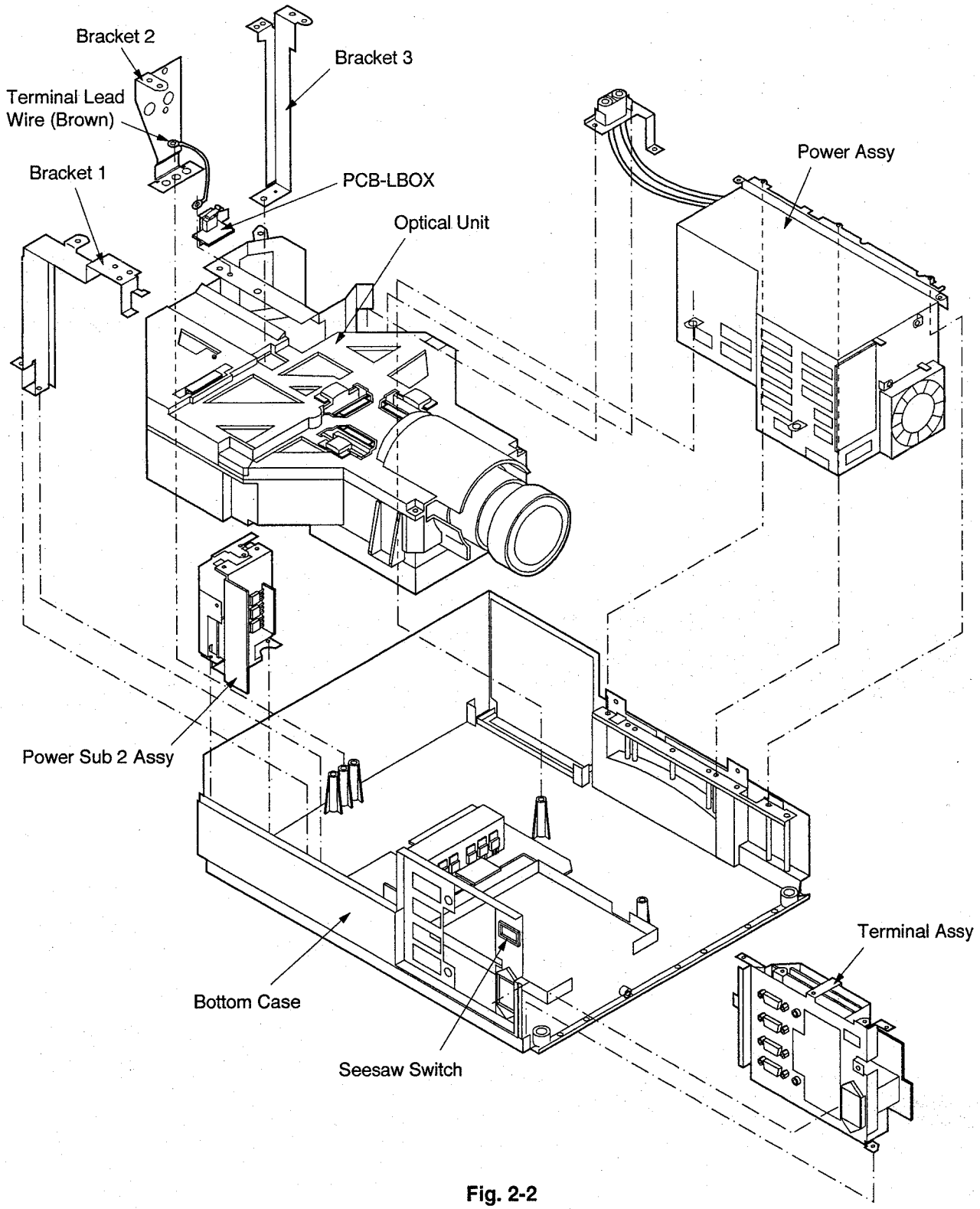

Fig. 2-2

Nome delle Parti	Numero delle Viti
Power Assy	7
Bracket 1	2
Bracket 2	1
Bracket 3	1

Nome delle Parti	Numero delle Viti
PCB-LBOX	2
Optical Unit	3
Power Sub 2 Assy	2
Terminal Assy	6

Numero delle Viti : Il numero delle parti che le Viti reggono.

Tabella 1-2

Fare riferimento all'ELENCO DELLE PARTI per il Numero delle Parti.
Nota: Durante il funzionamento gli operatori devono montare il nastro da polso per proteggere il LCD dall'elettricità statica.

Parti del Power Sub 2 Assy

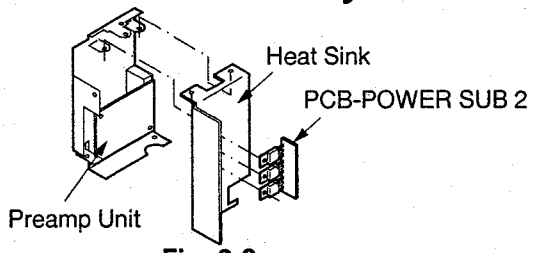

Fig. 2-3

Nome delle Parti	Numero delle Viti
PCB-POWER SUB 2	3
Heat Sink	2
PREAMP UNIT	2

Tabella 1-3

Parti del Terminal Assy

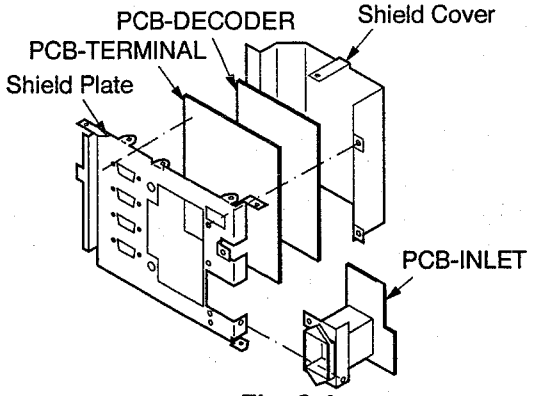

Fig. 2-4

Nome delle Parti	Numero delle Viti
Shield Cover	7
PCB-DECODER	(4 Attacchi)
PCB-TERMINAL	10
PCB-INLET	3

Tabella 1-4

Parti del Power Assy

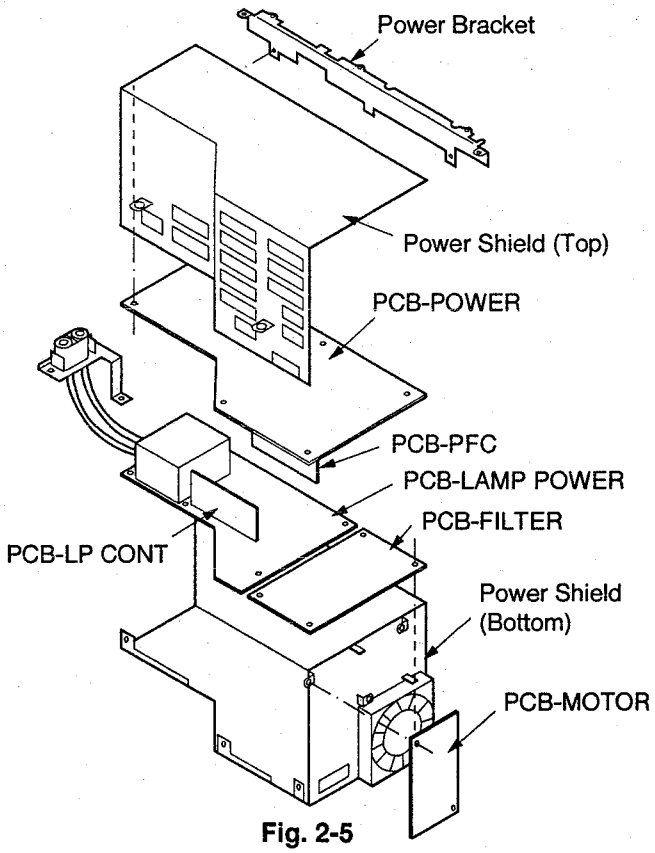

Fig. 2-5

Nome delle Parti	Numero delle Viti
Power Bracket	2
Power Shield (Top)	5
PCB-POWER	1 (5 Attacchi)
PCB-PFC	nessuno
PCB-LAMP POWER	(4 Attacchi)
PCB-MOTOR	2
PCB-FILTER	1 (3 Attacchi)
PCB-LP CONT	nessuno

Tabella 1-5

Parti del Bottom Case

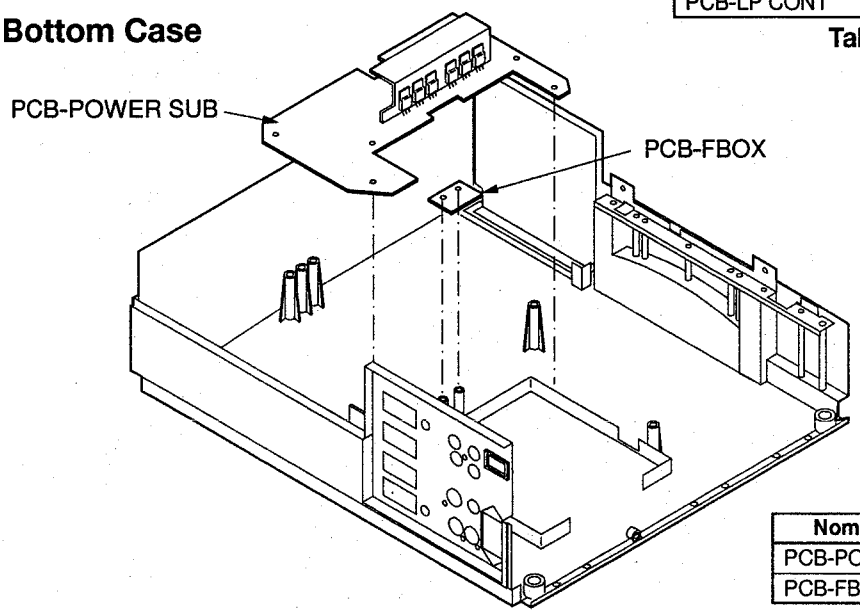

Fig. 2-6

Nome delle Parti	Numero delle Viti
PCB-POWER SUB	6
PCB-FBOX	2

Tabella 1-6

ITALIANO

Parti dell'Optical Unit

Fare riferimento all'ELENCO DELLE PARTI per il Numero delle Parti.
* Dopo la sostituzione della Lens Unit o del LCD Block, eseguire la regolazione del carrello della lente di messa a fuoco.

Nota: Durante il funzionamento gli operatori devono montare il nastro da polso per proteggere il LCD dall'elettricità statica.

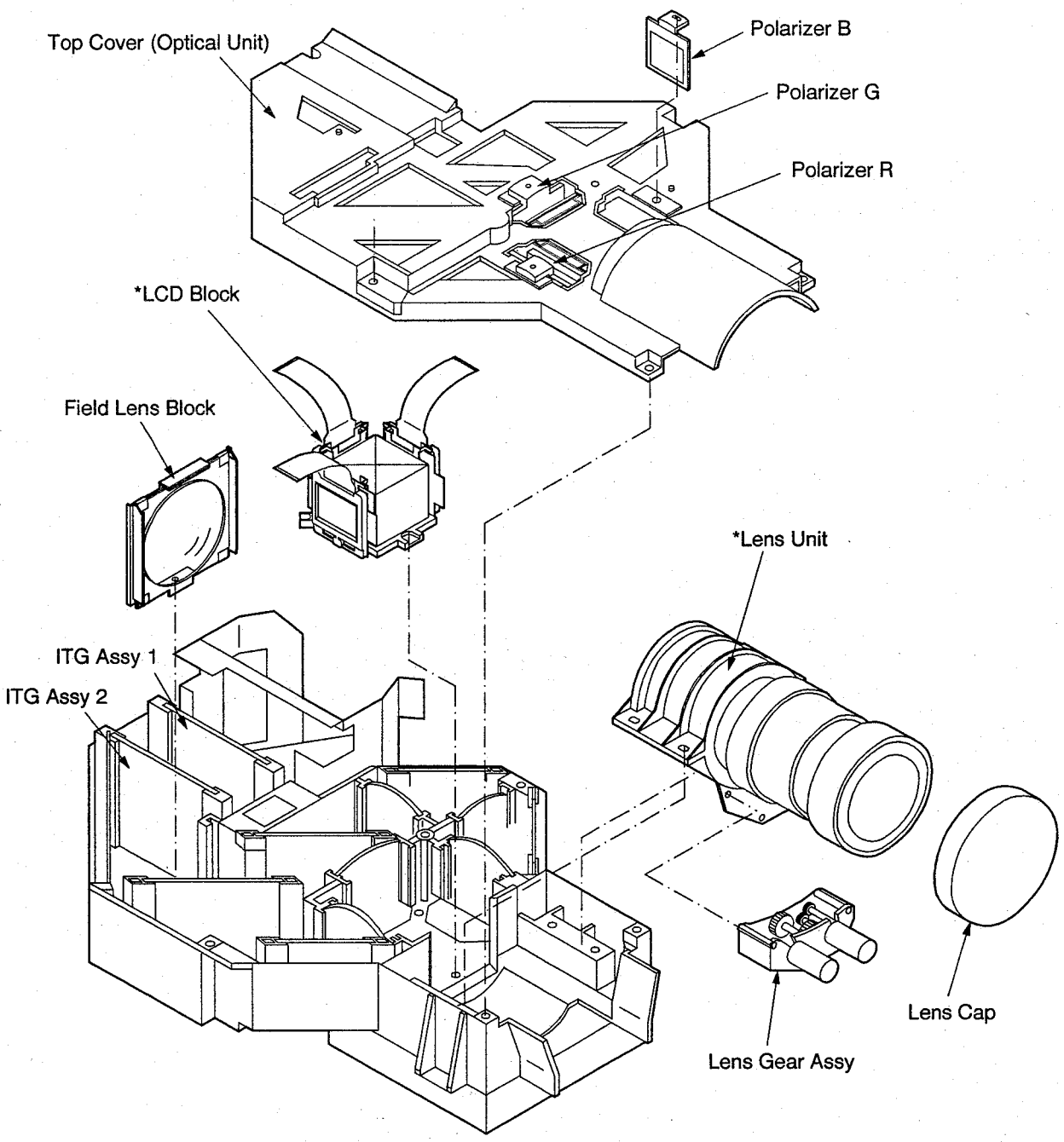

Fig. 2-7

Nome delle Parti	Numero delle Viti
Top Cover (Optical Unit)	6
Polarizer R	1
Polarizer G	1
Polarizer B	1

Nome delle Parti	Numero delle Viti
LCD Block	3
Field Lens Block	1
Lens Unit	4
Lens Gear Assy	3

Numero delle Viti : Il numero delle parti che le Viti reggono.

Tabella 1-7

RIVESTIMENTO DEL CONDUTTORE DI ISOLAMENTO

Nota: 1. I cavi interni sono fissati in modo da non vengano a trovarsi vicino a fonti di calore oppure parti ad alto voltaggio.
Completato un intervento di assistenza tecnica verificare che il passaggio di tutti i fili sia identico a quello originale.
2. Durante il funzionamento gli operatori devono montare il nastro da polso per proteggere il LCD dall'elettricità statica.

1. Assicurare i Fili Conduttori lungo la Zona di Fissaggio* mostrata nella figura in basso.
* La Zona di Fissaggio mostra il percorso del Filo Conduttore.

———	Zona di Fissaggio*
·····	Zona di Fissaggio Nascosta*

Rivestire il conduttore prima che la Optical Unit venga installata

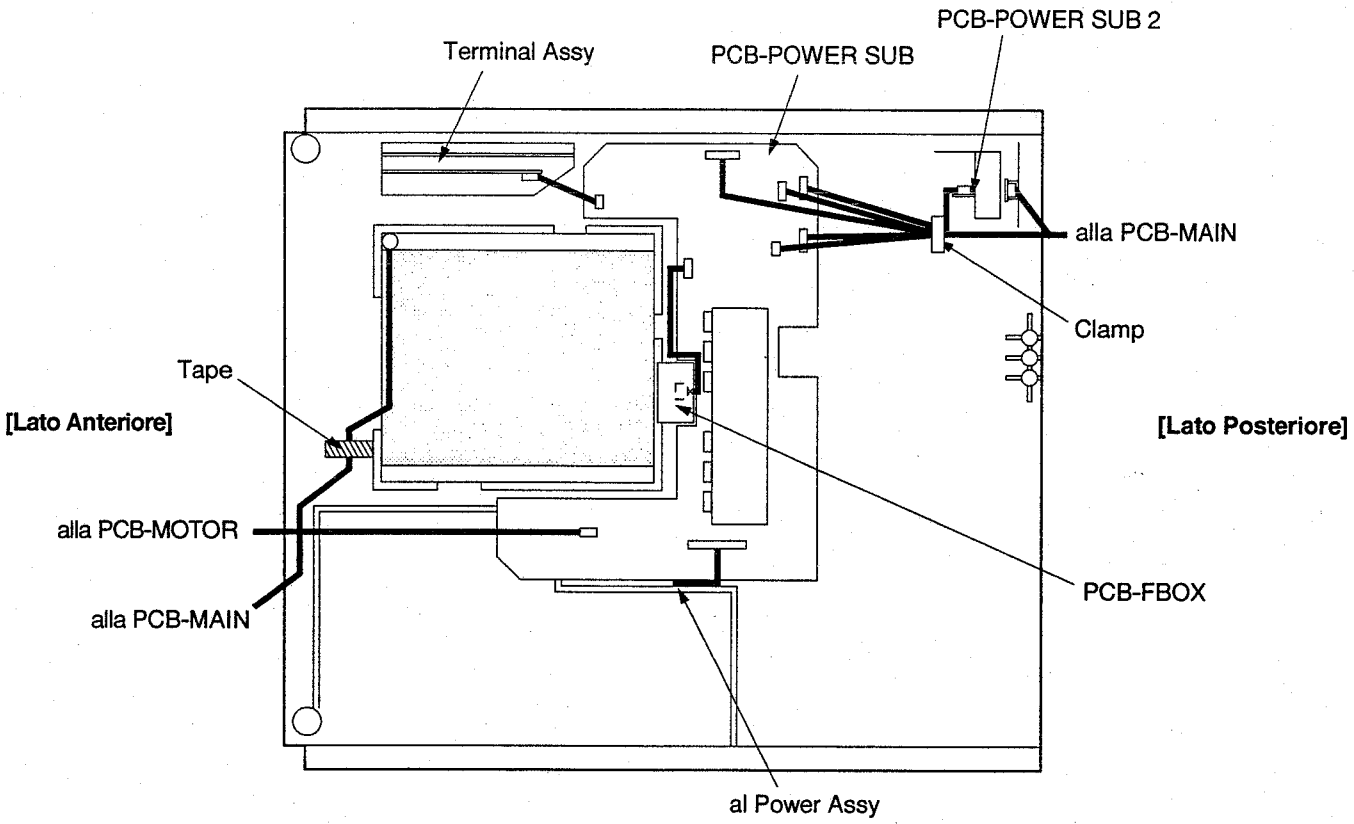

Fig. 3-1

Rivestire il conduttore quando la Optical Unit e il Power Assy vengono installati

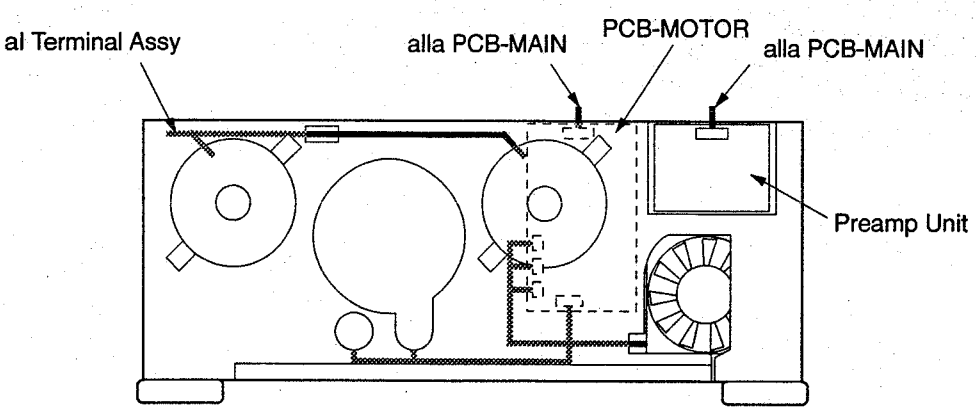

Fig. 3-2

ITALIANO

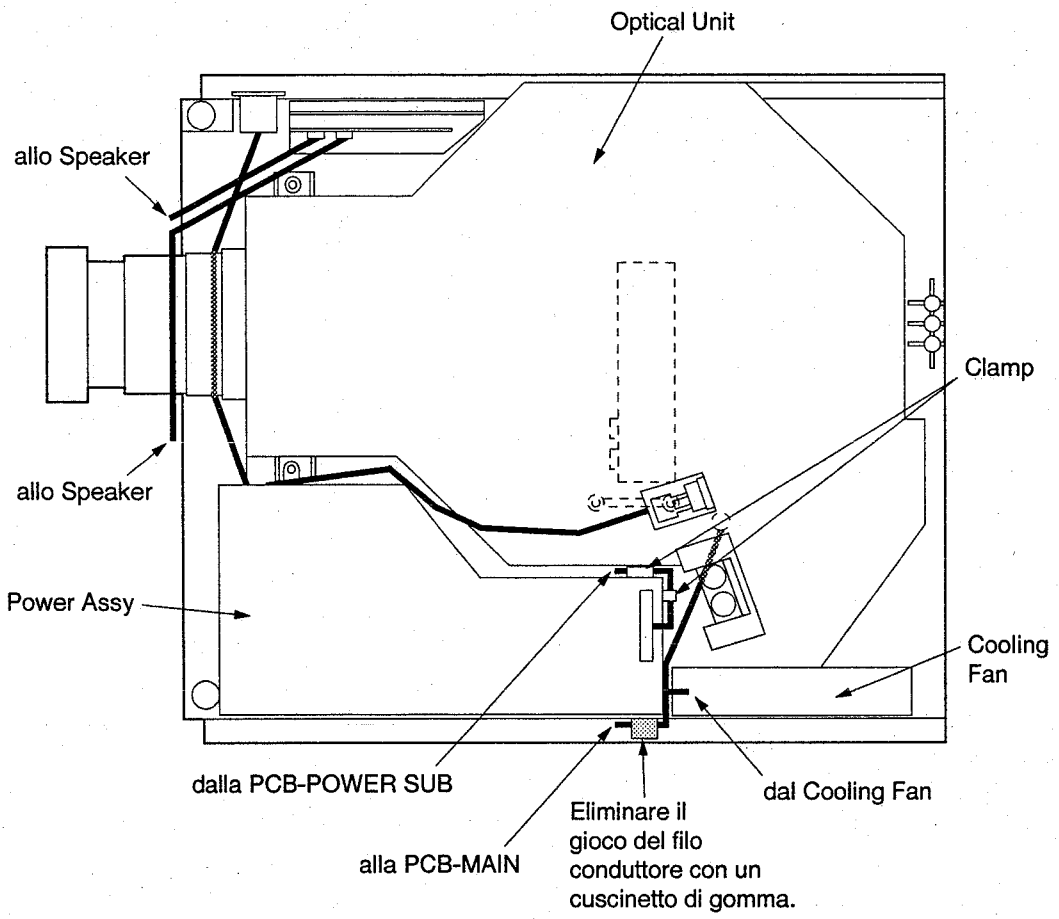

Fig. 3-3

ITALIANO

Rivestire il conduttore quando la PCB-MAIN e il Card Shield Cover vengono installati

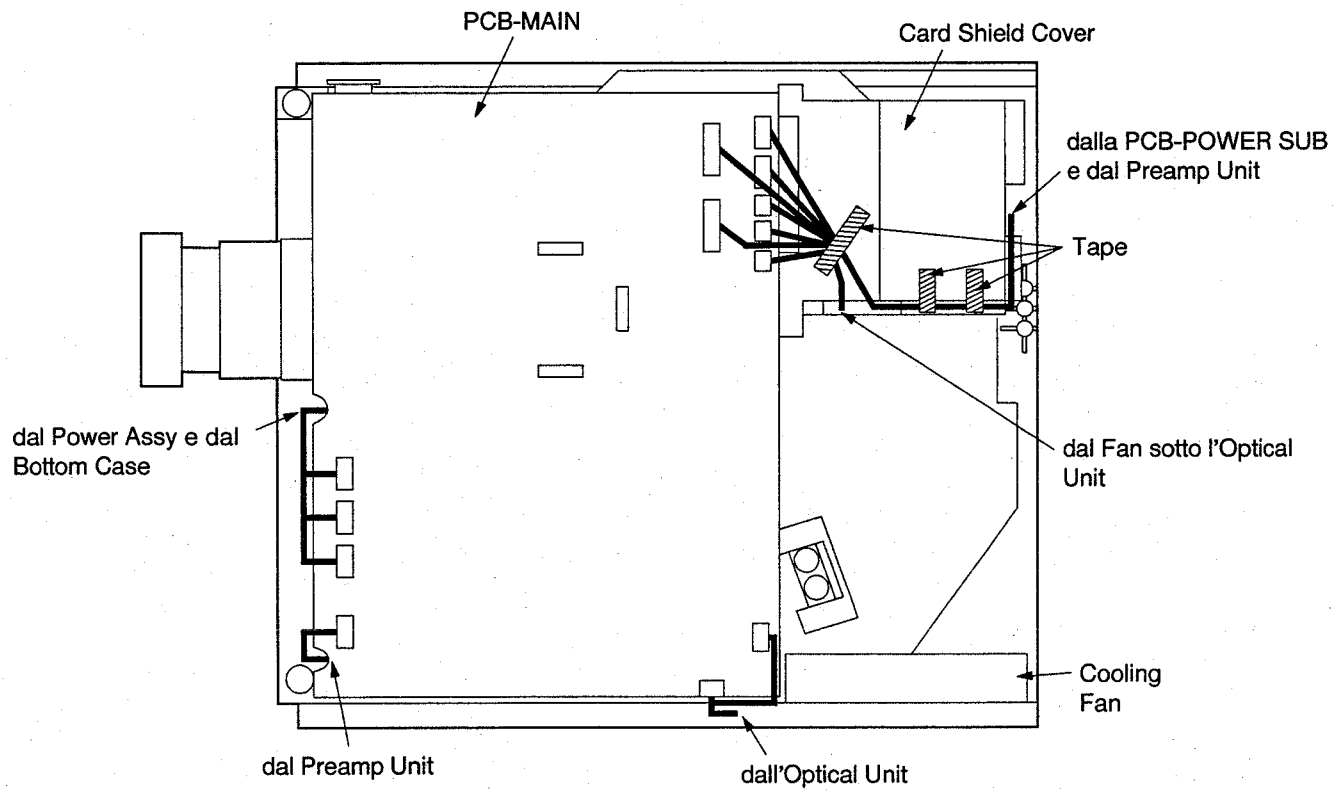

Fig. 3-4

SOSTITUZIONE DELLA LAMPADA

La lampada è strutturata per proiettare l'immagine sul pannello LCD. Quando la lampada non funziona più, sostituirne una nuova per assicurare una prestazione ottimale.

⚠ **Avvertenza:**

- Non rimuovere la lampada dal dispositivo immediatamente dopo avere utilizzato il proiettore, in caso contrario ci potrebbe essere il rischio di bruciarsi a causa dell'alta temperatura della lampada.
- Se si desidera sostituire la lampada, spegnere il collegamento e attendere 90 secondi in standby per raffreddare la lampada e i pannelli LCD, quindi spegnere l'interruttore principale, staccare la presa dalla parete e attendere altri 30 minuti, finché la lampada non sia fredda al tatto.
- Non rimuovere la lampada, se non per sostituirla . Un approccio poco attento potrebbe provocare danni o incendi.
- Non toccare la lampada direttamente. In caso contrario potrebbe provocare danni o bruciature.
- Assicurarsi che le viti del coperchio della lampada non cadano all'interno del proiettore. Assicurarsi inoltre di non inserirvi oggetti metallici o infiammabili. Potrebbe provocare un incendio o una scossa elettrica.
- Se è stato inserito qualsiasi oggetto, contattare il fornitore.
- Montare saldamente la lampada, un montaggio scorretto potrebbe provocare un incendio.
- **per il personale di assistenza tecnica**
  Non mancare di fissare separatamente all'apparecchio il Top Cover Assy e il Top Case. Se vengono installati assieme, l'otturatore esplosione-prova potrebbe non funzionare. Non accendere l'apparecchio in queste condizioni, altrimenti la lampada potrebbe esplodere.

1. Allentate la vite dello sportello della lampada sul coperchio superiore utilizzando un cacciavite (–), quindi togliete lo sportello.

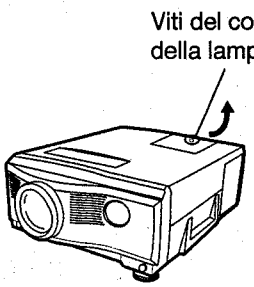

Importante:

- Prestate attenzione a non danneggiare il cavo elettrico collegato all'apparecchio.

2. Allentate una vite (a) della staffa metallica utilizzando un cacciavite (+), quindi toglietele. Prestate attenzione a non perdere la staffa metallica e le viti.

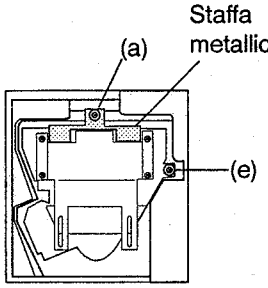

3. Inserite la staffa sostituiva della lampada nel proiettore.
   1) Inserite le staffe metalliche per la sostituzione della lampada nelle seguenti posizioni: sul lato anteriore della lampada (2 posizioni), all'interno della lampada e sui bordi inferiori (4 posizioni).
   2) Allineate i fori delle viti (c) ai nodi (d).
   3) Fissate il pezzo in posizione utilizzando le due viti in dotazione (b, b').

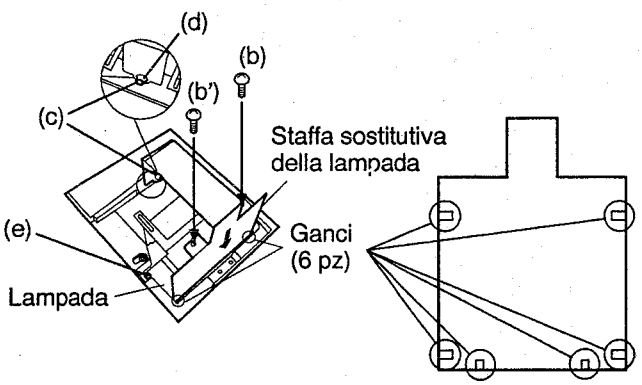

4. Allentate la vite di fissaggio della lampada (e) utilizzando un cacciavite (+) e rimuovetela.

5. Premete la maniglia sul proiettore per estrarre la lampada.
   Per quanto riguarda la lampada rimossa, prestate attenzione a non versare liquidi su di essa, non posizionatela accanto a fonti di calore e tenetela al di fuori della portata dei bambini. In caso contrario può provocare lesioni personali oppure incendi.

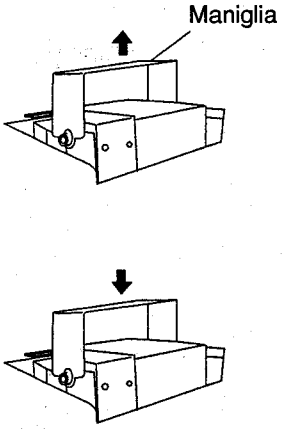

6. Inserite saldamente la nuova lampada nel corpo del proiettore nella direzione giusta.

7. Stringete le viti (e) rimosse al punto 4 utilizzando un cacciavite (+).

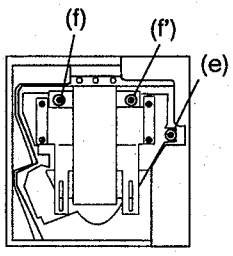

8. Allentate le due viti (f) (f1) della staffa sostitutiva della lampada con un cacciavite e toglietele con la staffa.

9. Togliete i fori dalle staffe metalliche sostitutive della lampada (c) dal nodo (d).

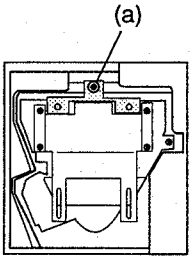

ITALIANO

10. Inserite le staffe metalliche fisse di cui al punto 2 nei fori delle viti (f) e (f1) utilizzando una vite (a) per fissare il pezzo in posizione.

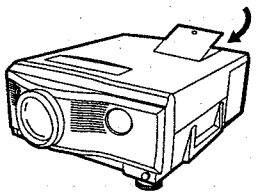

11. Stringete la vite dello sportello della lampada utilizzando un cacciavite (–).

Come azzerare il contatore del tempo di funzionamento
Collegate il cavo di alimentazione, accendete il proiettore ed azzerate il tempo della lampada premendo contemporaneamente i tasti < , > e POWER.

- La lampada non può essere rimossa dal proiettore senza staffa metallica.
- Se non disponete della staffa metallica sostitutiva, togliete la staffa metallica dalla nuova lampada ed utilizzatela. Non toccate direttamente la lampada, altrimenti può rompersi e provocare lesioni personali oppure ustioni.

- Per quanto riguarda la lampada rimossa, prestate attenzione a non versare liquidi su di essa, non posizionatela accanto a fonti di calore e tenetela al di fuori della portata dei bambini.
- Accertatevi che la guida del proiettore sia saldamente inserita tra le guide destra e sinistra della lampada. Non toccate direttamente la lampada; avvolgete un panno sulla lampada sostitutiva. In caso contrario può provocare lesioni personali oppure incendi.

⚠ **Importante:**
- Il proiettore non si accenderà se non fissate il coperchio della lampada.
- Azzerate sempre il contatore del tempo di funzionamento dopo aver sostituito la lampada.
- Non azzerate il contatore del tempo di funzionamento nel caso in cui la lampada non sia stata sostituita.

Durata della lampada
La durata media della lampada del proiettore è circa 1.000 ore di funzionamento consecutive. La durata può differire in base all'ambiente operativo e ridursi a 1.000 ore circa. Una diminuzione di luminescenza e/o luminosità del colore indica che la lampada deve essere sostituita. Quando il tempo di utilizzo della lampada ha superato 1.000 ore, l'indicatore lampeggia alternativamente di verde e di rosso (quando la lampada è accesa; quando la lampada è spenta, l'indicatore rimane acceso di continuo in rosso). Quando la lampada è stata utilizzata per 1.250 ore circa, sullo schermo appare il messaggio "LAMP!". Quando la lampada è stata utilizzata per 1.300 ore, il proiettore si spegne automaticamente per evitare danni alla lampada e l'indicatore di funzionamento si accende di rosso. Il proiettore non può essere utilizzato finché non è stata sostituita la lampada.

⚠ **Precauzioni:**
- La lampada sorgente di luce è fragile. Attenti a non tagliarvi con i frammenti.
- La durata della lampada dipende dall'ambiente. Per le lampade sostitutive, si prega di consultare il vostro rivenditore.

Quando la lampada è consumata, dopo circa 1300 ore, il proiettore si spegne automaticamente.

ITALIANO

REGOLAZIONE DEL CARRELLO DELLA LENTE DI MESSA A FUOCO

Eseguire questa regolazione dopo la sostituzione della Lens Unit o del LCD Block.
Fissare la Lens Unit per ottimizzare la messa a fuoco quando si zuma o si toglie la zumata fino in fondo.

1. Svitare le quattro viti che fissano la Lens Unit. Sistemare le viti accanto al centro del foro della vite (ellittico).
2. Premere il pulsante messa a FOCUS/ZOOM per indicare "ZOOM" sullo schermo.
3. Premere il pulsante "ADJUST +" per togliere la zumata fino in fondo (fino all'immagine più piccola).
4. Ottimizzare sullo schermo la messa a fuoco dei pixel.
5. Indicare lo "ZOOM" sullo schermo. Premere il pulsante "ADJUST -" per zumare fino in fondo (fino all'immagine più grande).
6. Inserire un piccolo cacciavite [equivalente a 0,24 × 4 pollici di misura (6 × 100 mm)] nel foro triangolare per la regolazione del carrello. Girare il cacciavite per ottimizzare la messa a fuoco dei pixel sullo schermo. Girando il cacciavite la Lens Unit viene spostata in avanti e indietro.
7. Indicare lo "ZOOM" sullo schermo. Premere il pulsante "ADJUST +" per togliere la zumata.
8. Esaminare la messa a fuoco. Quando la messa a fuoco viene ottimizzata, questa regolazione è completa. In caso contrario, eseguire questa regolazione di nuovo dal punto 4.
9. Avvitare le quattro viti. (torsione vite 14±2kgf·m)

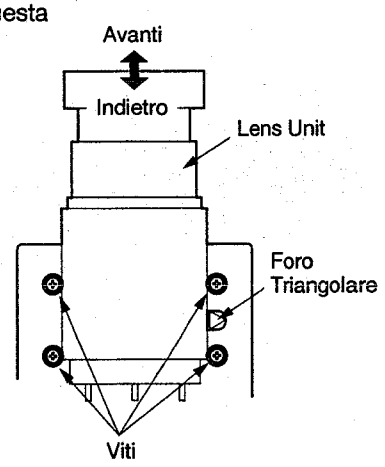

Optical Unit

REGOLAZIONI ELETTRICHE

Per ogni regolazione di circuito di questo prodotto usare il programma di comunicazione [Hyper Terminal] del sistema Operativo Microsoft® Windows® 95.

❑ Collegamenti e Apparecchiature Necessarie

Collegare le seguenti apparecchiature come mostrato nella figura a destra.

- LVP-X200E
- Personal Computer (con il Sistema Operativo Microsoft® Windows® 95)
- Cavo RS-232C
- Generatore di Segnale XGA (Equivalente a VG-814)
- Generatore di Segnale NTSC
- Generatore di Segnale PAL
- Monitor per Personal Computer

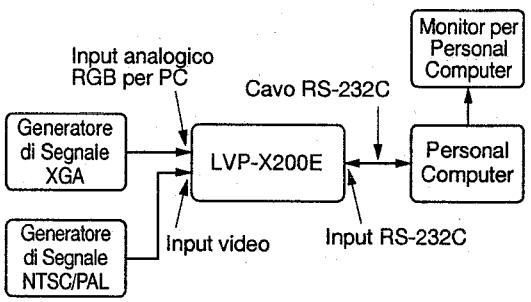

❑ Segnale di Prova

- Segnale barra dei colori NTSC (Composito)
- Segnale barra dei colori PAL (Composito)
- Segnale XGA (Frequenza orizzontale 60Hz)
  La determinazione dei tempi e i campioni per la regolazione sono come segue:

Determinazione dei tempi H

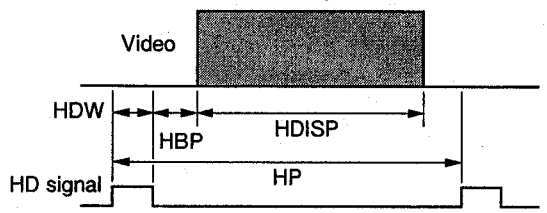

Determinazione dei tempi V

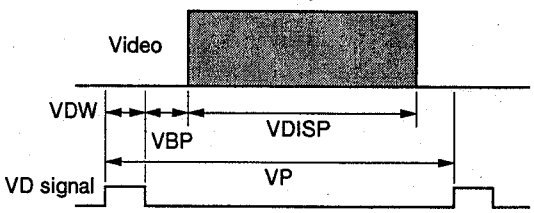

ROM Programma : LC6 Ver. 1.1

Num. Programma	Campione
01	100% Quadro Bianco
12	50% Quadro Bianco
15	Una Linea Orizzontale si e una no (Rosso)
16	Una Linea Orizzontale si e una no (Verde)
17	Una Linea Orizzontale si e una no (Blu)
35	SMTPE (Rosso)
36	SMTPE (Verde)
37	SMTPE (Blu)

Determinazione dei tempi del segnale XGA (Frequenza Orizzontale 60Hz)

DOT-CLOCK [MHz]	65.0	VP [H]	806
HP [DOT]	1344	VDISP [H]	768
HDISP [DOT]	1024	VDW [H]	6
HDW [DOT]	136	VBP [H]	29
HBP [DOT]	160	Intreccio	—
		Polarità Segnale	HD : –, VD : –

ITALIANO

❑ Regolazione con il Sistema Operativo Microsoft® Windows® 95

1. Avvia

1. Avvia Windows® 95.
2. Doppio clic cartella [Accessories].
3. Doppio clic cartella [Hyper Terminal].
4. Doppio clic cartella [Hyper Trm].

2. Impostazione Hyper Terminal

1. Dal menu File cliccare sulla finestra Hyper Terminal [Properties].
   Si apre la finestra [Connecting Properties].
   In questa finestra impostare come segue.
2. Dal menu comunicazione cliccare [Connecting] per collegare LVP-X200E.

Elemento		Impostazione
Comm. Port		Port (COM1-COM4)
Port setting	: Bit/sec	9600
	: Data bit	8 bit
	: Parity	None
	: Stop bit	1
	: Flow control	Hardware
Setting	: Emulation	VT100
ASCII setting	: Sending ASCII	Put a line feed character at the end of the line
		Local echo
		Delay (Line) : 1000msec.
		Delay (Character) : 10msec.
	: Receiving ASCII	Put a line feed character at the end of received data

ITALIANO

3. Regolazione

Tramite tastiera immettere in maiuscolo il comando di regolazione e il valore di regolazione nella finestra Hyper Terminal quindi premere il tasto di immissione.

4. Valore di Regolazione della Scrittura

Tramite tastiera immettere in maiuscolo il comando di scrittura e il valore di regolazione nella finestra Hyper Terminal quindi premere il tasto di immissione.

Nota: Questa operazione non è necessaria per la regolazione 2 (livello di bloccaggio) e 3 (convertitore A/D) della regolazione automatica.

5. Chiudere la Finestra

Cliccare il pulsante di chiusura situato nella parte alta a destra della finestra e chiudere Hyper Terminal.
Dopo avere chiuso tutte le finestre aperte chiudere Windows® 95.

Procedure di Regolazione

[Circuito di alimentazione lampada]	Scopo della Regolazione	Per impostare il valore corretto della tensione di alimentazione della lampada.
1. Potenza di alimentazione lampada	Sintomo di una Regolazione Errata	La lampada non raggiunge la luminosità specificata o la lampada potrebbe esplodere.

Strumento di Misurazione	Amperometro, voltametro
Punto di prova	Potenza emessa dalla lampada
Commutazione EXT	----
Gamma di misurazione	----
Segnale di ingresso	----
Terminale di ingresso	----

* Concludere la regolazione entro 1 minuto dall'accensione dell'apparecchio.

1. Rimuovere la Lamp Box e la main shield cover dall'apparecchio.
2. Collegare un amperometro, un voltametro e una falsa resistenza di carico (resistenza non induttiva 12Ω 350 W) con la potenza lampada mostrata nella figura.
3. Accendere l'apparecchio.
4. Regolare VR9V0 (PCB-LAMP POWER) in modo che la potenza emessa sia di 338±2 W (voltaggio 64V, amperaggio 5,28A, mantenendosi nell'intervallo indicato nella tabella e nel grafico seguenti).Regolare VR9V0 utilizzando il foro di regolazione sulla PCB-MAIN.

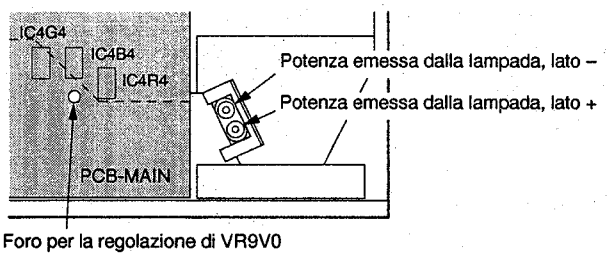

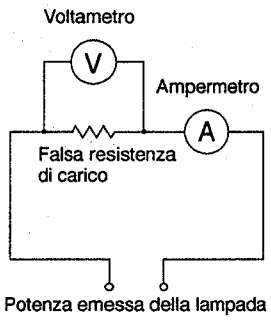

Collegamento strumenti di misurazione

Tabella riepilogativa di regolazione

Voltaggio V	Amperaggio A (massimo)	Amperaggio A (minimo)
63.60	5.35	5.28
63.65	5.34	5.28
63.70	5.34	5.27
63.75	5.33	5.27
63.80	5.33	2.27
63.85	5.32	5.26
63.90	5.32	5.26
63.95	5.32	5.25
64.00	5.31	5.25
64.05	5.31	5.25
64.10	5.30	5.24
64.15	5.30	5.24
64.20	5.30	5.23
64.25	5.29	5.23
64.30	5.29	5.23
64.35	5.28	5.22
64.40	5.28	5.22
64.45	5.28	5.21
64.50	5.27	5.21
64.55	5.27	5.21
64.60	5.26	5.20

Gamma di regolazione potenza lampada

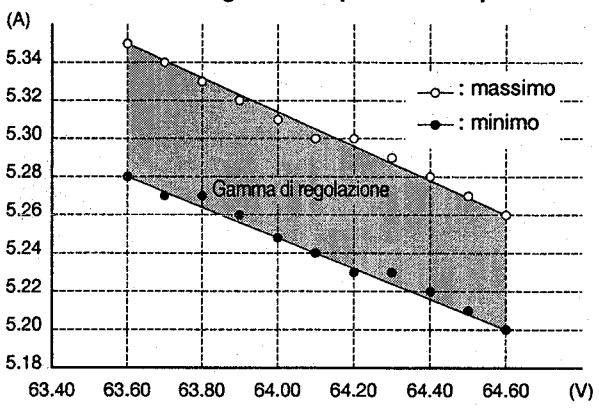

ITALIANO

[Circuito di Pre-Amplificazione A/D] 2. Livello di Bloccaggio	**Scopo della Regolazione**	Impostare il livello di c.c. di un segnale d'immagine che deve essere inviato nel convertitore A/D.
	Sintomo di una Regolazione Errata	L'immagine in monocromia ha una tinta di colore.

Strumento di Misurazione	—
Punto di prova	—
Commutazione EXT	—
Gamma di misurazione	—
Segnale di ingresso	Segnale XGA (100 % Bianco, Num. 01)
Terminale di ingresso	Input analogico RGB per PC

* Immettere il comando di regolazione in caratteri alfanumerici maiuscoli.

1. Collegare LVP-X200E con un personal computer (con il Sistema Operativo Microsoft® Windows® 95). (Fare riferimento alla figura a P.11)
2. Avviare Microsoft® Windows® 95 nel personal computer.
3. Per aprire la finestra avviare il programma di comunicazione [Hyper Terminal] in Microsoft® Windows® 95. (Per l'impostazione, fare riferimento all'impostazione di Hyper Terminal a P.12)
4. Ripristinare il modo normale sul menu principale di questo prodotto.

RGB

5. Dare un segnale XGA (100 % Bianco, Num. 01).
6. Immettere [00~70] (comando regolazione bloccaggio ingresso RGB) nella finestra Hyper Terminal e la regolazione automatica si avvia.
7. Il comando di ritorno [00~70111] appare nella finestra di Hyper Terminal dopo la regolazione.
   Le ultime 3 cifre del comando di ritorno indicano il risultato della regolazione ed ogni cifra corrisponde nell'ordine a R, G e B. La cifra 1, indica che la regolazione è stata eseguita correttamente. La cifra 0, indica che la regolazione non è stata eseguita correttamente a causa di un difetto della PCB, di segnali errati o di una selezione d'ingresso errata.

VIDEO

8. Dare un segnale NTSC (barra dei colori) al terminal di ingresso video.
9. Immettere [00~71] (comando regolazione bloccaggio ingresso VIDEO) nella finestra Hyper Terminal e la regolazione automatica si avvia.
10. Il comando di ritorno [00~7111] appare nella finestra di Hyper Terminal dopo la regolazione.
    Le ultime 2 cifre del comando di ritorno indicano il risultato della regolazione ed ogni cifra corrisponde a R-Y e B-Y. La cifra 1, indica che la regolazione è stata eseguita correttamente. La cifra 0, indica che la regolazione non è stata eseguita correttamente a causa di un difetto della PCB, di segnali errati o di una selezione d'ingresso errata.

ITALIANO

[Circuito di Pre-Amplificazione A/D] 3. Convertitore A/D	**Scopo della Regolazione**	Impostare l'ampiezza di un segnale video che deve essere inviato al convertitore A/D.
	Sintomo di una Regolazione Errata	L'immagine in monocromia ha una tinta di colore.

Strumento di Misurazione	—
Punto di prova	—
Commutazione EXT	—
Gamma di misurazione	—
Segnale di ingresso	Segnale XGA (100 % Bianco, Num. 01)
Terminale di ingresso	Input analogico RGB per PC

* Immettere il comando di regolazione in caratteri alfanumerici maiuscoli.

1. Collegare LVP-X200E con un personal computer (con il Sistema Operativo Microsoft® Windows® 95). (Fare riferimento alla figura a P.11)
2. Avviare Microsoft® Windows® 95 nel personal computer.
3. Per aprire la finestra avviare il programma di comunicazione [Hyper Terminal] in Microsoft® Windows® 95. (Per l'impostazione, fare riferimento all'impostazione di Hyper Terminal a P.12)
4. Ripristinare il modo normale sul menu principale di questo prodotto.
5. Dare un segnale XGA (100 % Bianco, Num. 01).
6. Immettere [00~5] (Comando di regolazione A/D) nella finestra Hyper Terminal e la regolazione automatica si avvia.
7. Il comando di ritorno [00~5111] appare nella finestra di Hyper Terminal dopo la regolazione.
   Le ultime 3 cifre del comando di ritorno indicano il risultato della regolazione ed ogni cifra corrisponde nell'ordine a R, G e B. La cifra 1, indica che la regolazione è stata eseguita correttamente. La cifra 0, indica che la regolazione non è stata eseguita correttamente a causa di un difetto della PCB, di segnali errati o di una selezione d'ingresso errata.

ITALIANO

[Circuito di Regolazione di Comando del Pannello a Cristalli Liquidi] 4. Falsa immagine	**Scopo della Regolazione**	Per rimuovere false immagini dallo schermo.
	Sintomo di una Regolazione Errata	False immagini appaiono ogni 12 elementi d'immagine.

Strumento di Misurazione	—
Punto di prova	—
Commutazione EXT	—
Gamma di misurazione	—
Segnale di ingresso	Segnale XGA (SMTPE(R), Num. 35)
Terminale di ingresso	Input analogico RGB per PC

* Eseguire questa regolazione solo quando appaiono insolitamente sullo schermo false immagini.
* Immettere il comando di regolazione in caratteri alfanumerici maiuscoli.

1. Collegare LVP-X200E con un personal computer (con il Sistema Operativo Microsoft® Windows® 95). (Fare riferimento alla figura a P.11)
2. Avviare Microsoft® Windows® 95 nel personal computer.
3. Per aprire la finestra avviare il programma di comunicazione [Hyper Terminal] in Microsoft® Windows® 95. (Per l'impostazione, fare riferimento all'impostazione di Hyper Terminal a P.12)
4. Ripristinare il modo normale sul menu principale di questo prodotto.
5. Proiettare immagini sullo schermo.

Rosso

6. Dare un segnale XGA (SMTPE(R), Num. 35).
7. Fare funzionare la fonte del segnale in modo che venga proiettata sullo schermo in monocromia rossa.
8. Immettere il comando regolazione [00~3123 □□] nella finestra Hyper Terminal per ridurre al minimo le false immagini rosse. Immettere [99], [AA], [BB], [CC] o [DD] in □□ per ridurre le false immagini. [BB] è stato scritto in □□ prima della regolazione.
   (*1) Quando appare il comando inviato, l'immissione è stata eseguita correttamente. Il valore corrente può essere confermato inviando il comando senza immettere un valore in □□.
9. Immettere il comando per la scrittura di [00~1E93 □□] nella finestra di Hyper Terminal e registrare il valore modificato nella EEPROM. Immettere il valore del passo 8 in □□. (*1)

Verde

10 Dare un segnale XGA (SMTPE(G), Num. 36).
11. Fare funzionare la fonte del segnale in modo che venga proiettata sullo schermo in monocromia verde.
12. Immettere il comando regolazione [00~3223 □□] nella finestra Hyper Terminal per ridurre al minimo le false immagini verdi. Immettere [99], [AA], [BB], [CC] o [DD] in □□ per ridurre le false immagini. [BB] è stato scritto in □□ prima della regolazione. (*1)
13. Immettere il comando per la scrittura di [00~1EAA □□] nella finestra di Hyper Terminal e registrare il valore modificato nella EEPROM. Immettere il valore del passo 12 in □□. (*1)

Blu

14. Dare un segnale XGA (SMTPE(B), Num. 37).
15. Fare funzionare la fonte del segnale in modo che venga proiettata sullo schermo in monocromia blu.
16. Immettere il comando regolazione [00~3323 □□] nella finestra Hyper Terminal per ridurre al minimo le false immagini blu. Immettere [99], [AA], [BB], [CC] o [DD] in □□ per ridurre le false immagini. [BB] è stato scritto in □□ prima della regolazione. (*1)
17. Immettere il comando per la scrittura di [00~1EC1 □□] nella finestra di Hyper Terminal e registrare il valore modificato nella EEPROM. Immettere il valore del passo 16 in □□. (*1)

ITALIANO

[Circuito di Regolazione di Comando del Pannello a Cristalli Liquidi] 5. Linea verticale	**Scopo della Regolazione**	Per rimuovere le linee verticali dallo schermo.
	Sintomo di una Regolazione Errata	Le linee verticali appaiono ogni 12 elementi d'immagine.

Strumento di Misurazione	—
Punto di prova	—
Commutazione EXT	—
Gamma di misurazione	—
Segnale di ingresso	Segnale XGA (Bianco 50 %, Num. 12)
Terminale di ingresso	Input analogico RGB per PC

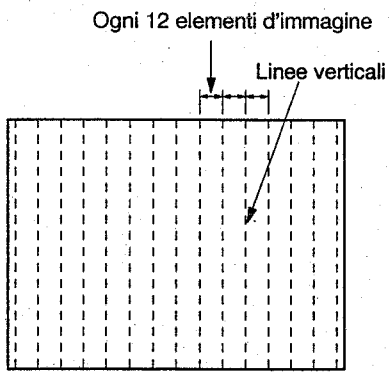

* Eseguire questa regolazione solo quando appaiono insolitamente sullo schermo linee verticali.
* Immettere il comando di regolazione in caratteri alfanumerici maiuscoli.

1. Collegare LVP-X200E con un personal computer (con il Sistema Operativo Microsoft® Windows® 95). (Fare riferimento alla figura a P.11)
2. Avviare Microsoft® Windows® 95 nel personal computer.
3. Per aprire la finestra avviare il programma di comunicazione [Hyper Terminal] in Microsoft® Windows® 95. (Per l'impostazione, fare riferimento all'impostazione di Hyper Terminal a P.12)
4. Ripristinare il modo normale sul menu principale di questo prodotto.
5. Dare un segnale XGA (Bianco 50 %, Num. 12).
6. Proiettare immagini sullo schermo.
7. Immettere il comando regolazione [00~227 □□] nella finestra Hyper Terminal per ridurre al minimo le linee verticali. Per linee verticali minime immettere qualsiasi valore da [10h] a [FFh] in □□. Prima della regolazione in □□ è stato scritto [10h].
   (*1) Quando appare il comando inviato, l'immissione è stata eseguita correttamente. Il valore corrente può essere confermato inviando il comando senza immettere un valore in □□.
8. Immettere il comando per la scrittura di [00~1F2B □□] nella finestra di Hyper Terminal e registrare il valore modificato nella EEPROM. Immettere il valore del passo 7 in □□. (*1)

ITALIANO

[Circuito di Regolazione di Comando del Pannello a Cristalli Liquidi] 6. Sfarfallamento	**Scopo della Regolazione**	Per rimuovere lo sfarfallamento dallo schermo.
	Sintomo di una Regolazione Errata	Comparsa dello sfarfallamento.

Strumento di Misurazione	—
Punto di prova	—
Commutazione EXT	—
Gamma di misurazione	—
Segnale di ingresso	Segnale XGA (Una Linea orizzontale un elemento immagine rossa si e uno no, Num. 15)
Terminale di ingresso	Input analogico RGB per PC

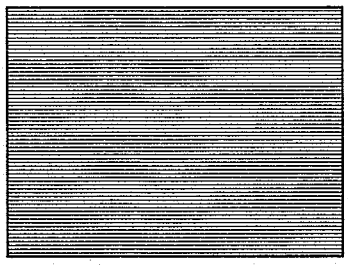

Linea Orizzontale un Campione Elemento Immagine si e uno no

* Eseguire questa regolazione solo quando appaiono insolitamente sullo schermo degli sfarfallamenti.
* Immettere il comando di regolazione in caratteri alfanumerici maiuscoli.

1. Collegare LVP-X200E con un personal computer (con il Sistema Operativo Microsoft® Windows® 95). (Fare riferimento alla figura a P.11)
2. Avviare Microsoft® Windows® 95 nel personal computer.
3. Per aprire la finestra avviare il programma di comunicazione [Hyper Terminal] in Microsoft® Windows® 95. (Per l'impostazione, fare riferimento all'impostazione di Hyper Terminal a P.12)
4. Ripristinare il modo normale sul menu principale di questo prodotto.

Rosso

5. Dare un segnale XGA (Linea orizzontale una immagine rossa si e una no, Num. 15).
6. Proiettare immagini sullo schermo.
7. Immettere il comando regolazione [00~229 □□] nella finestra Hyper Terminal per ridurre al minimo gli sfarfallamenti rossi. Per sfarfallamenti minimi immettere qualsiasi valore da [00h] a [FFh] in □□. Prima della regolazione in □□ è stato scritto [A0h].
   (*1) Quando appare il comando inviato, l'immissione è stata eseguita correttamente. Il valore corrente può essere confermato inviando il comando senza immettere un valore in □□.
8. Immettere il comando per la scrittura di [00~1F2D □□] nella finestra di Hyper Terminal e registrare il valore modificato nella EEPROM. Immettere il valore del passo 7 in □□. (*1)

Verde

9. Dare un segnale XGA (Linea orizzontale una immagine verde si e una no, Num. 16).
10. Immettere il comando regolazione [00~22A □□] nella finestra Hyper Terminal per ridurre al minimo gli sfarfallamenti verdi. Per sfarfallamenti minimi immettere qualsiasi valore da [00h] a [FFh] in □□. Prima della regolazione in □□ è stato scritto [A0h]. (*1)
11. Immettere il comando per la scrittura di [00~1F2E □□] nella finestra di Hyper Terminal e registrare il valore modificato nella EEPROM. Immettere il valore del passo 10 in □□. (*1)

Blu

12. Dare un segnale XGA (Linea orizzontale una immagine blu si e una no, Num. 17).
13. Immettere il comando regolazione [00~22B □□] nella finestra Hyper Terminal per ridurre al gli sfarfallamenti immagini blu. Per sfarfallamenti minimi immettere qualsiasi valore da [00h] a [FFh] in □□. Prima della regolazione in □□ è stato scritto [A0h]. (*1)
14. Immettere il comando per la scrittura di [00~1F2F □□] nella finestra di Hyper Terminal e registrare il valore modificato nella EEPROM. Immettere il valore del passo 13 in □□. (*1)

ITALIANO

INDICAZIONI D'ERRORE DEL LED

Questo apparecchio è dotato della funzione di autodiagnosi. In caso di anomalie, il LED nella parte superiore dell'apparecchio indica l'errore.

Metodo di diagnosi : Ogni volta che viene attivata l'alimentazione principale, il SW si attiva e in 4 secondi viene eseguito il controllo degli errori di ogni sensore. Durante il controllo il POWER LED rimane rosso.

Indicazione del risultato della diagnosi : Nella tabella seguente vengono indicati i guasti e le indicazioni del LED. Il LED può essere ripristinato "automaticamente" o "disattivando e attivando l'alimentazione principale" dopo il rilevamento degli errori.

Accensione forzata : Quando non è possibile accendere l'apparecchio per mancanza di corrente di STBY o mancanza di corrente di SW, premere contemporaneamente i tre tasti RGB, VIDEO e CARD nella parte superiore dell'apparecchio durante i 4 secondi di controllo del sensore per accendere l'apparecchio e rilevare il guasto. In questo caso, funzionano i circuiti di protezione tranne per mancanza di corrente di STBY e mancanza di corrente di SW.

Elenco delle indicazioni d'errore LED

Ordine preferenziale	Guasto	Sintomo	Scopo	Indicazione del LED					Ripristino
				POWER	LAMP	TEMP	CARD1	CARD2	
1	Mancanza corrente STBY	Mancata accensione	Rilevamento guasto	Rosso/verde alternativamente	Arancione	Lampeggia 2 volte rosso	*	*	Alimentazione principale
2	Mancanza corrente SW	Mancata accensione	Rilevamento guasto	Rosso/verde alternativamente	Arancione	Lampeggia rosso	*	*	Alimentazione principale
3	Arresto Fan (Optical Unit)	Mancata accensione	Rilevamento guasto	Rosso/verde alternativamente	Rosso	Lampeggia 3 volte rosso	*	*	Alimentazione principale
4	Arresto Fan (esaurimento)	Mancata accensione	Rilevamento guasto	Rosso/verde alternativamente	Rosso	Lampeggia 2 volte rosso	*	*	Alimentazione principale
5	Arresto Fan (aspirazione)	Mancata accensione	Rilevamento guasto	Rosso/verde alternativamente	Rosso	Lampeggia rosso	*	*	Alimentazione principale
6	Arresto Fan (alimentazione)	Mancata accensione	Rilevamento guasto	Rosso/verde alternativamente	Rosso	Lampeggia 4 volte rosso	*	*	Alimentazione principale
7	LBOX aperto	Mancata accensione	Prevenzione pericolo	Rosso/verde alternativamente	–	–	*	*	Automatico
8	FBOX aperto	Mancata accensione	Prevenzione penetrazione polvere	Rosso/verde alternativamente	–	–	*	*	Automatico
9	Termistore disconnesso (esaurimento)	Mancata accensione	Rilevamento guasto	Rosso/verde alternativamente	–	Lampeggia rosso	*	*	Automatico
10	Termistore disconnesso (lampada)	Mancata accensione	Rilevamento guasto	Rosso/verde alternativamente	–	Lampeggia 2 volte rosso	*	*	Automatico
11	Trasmissione tra i computer fallita	Mancata accensione	Rilevamento guasto	Rosso/verde alternativamente	Arancione	Rosso	*	*	Automatico
12	Bus IIC difettoso (EEPROM)	Mancata accensione	Rilevamento guasto	Rosso/verde alternativamente	Verde	Lampeggia 2 volte rosso	*	*	Automatico
13	Bus IIC difettoso (decodificatore)	Display inferiore dell'ingresso VIDEO	Rilevamento guasto	Rosso/verde alternativamente	Verde	Lampeggia rosso	*	*	Automatico

– : LED spento
* : Conferma non necessaria
Arancione : Entrambe le luci rossa e verde
Lampeggiamento N volte rosso : Viene ripetuto il ciclo di N lampeggiamenti in rosso e si spegne per il tempo prefissato.

Elenco delle indicazioni d'errore LED

Ordine preferenziale	Guasto	Sintomo	Scopo	Indicazione del LED					Ripristino
				POWER	LAMP	TEMP	CARD1	CARD2	
14	Sensore della temperatura (lampada)	Mancata accensione	Aumento temperatura	Rosso	–	Lampeggia 2 volte rosso	*	*	Automatico
15	Sensore della temperatura (aspirazione)	Mancata accensione	Aumento temperatura	Rosso	–	Lampeggia rosso	*	*	Automatico
16	Sensore della temperatura (PCB)	Mancata accensione	Aumento temperatura	Rosso	–	Lampeggia 3 volte rosso	*	*	Automatico
17	Durata lampada (1000-1300 ore)	Indicazione di avvertimento solo mediante LED	Indicazione di avvertimento mediante LED Indicazione durante attesa funzionamento	Rosso	Lampeggia rosso	–	*	*	Manuale
			Indicazione di avvertimento mediante LED Indicazione durante attesa funzionamento	Verde	Rosso/verde alternativamente	–	*	*	Manuale
	Durata lampada (minimo 1300 ore)	Mancata accensione	Durata lampada	Rosso	Rosso	–	*	*	Manuale
18	La lampada non si accende	Mancata accensione per 1 minuto	Protezione lampada	Rosso	Lampeggia verde	–	*	*	Automatico
19	Per 1 minuto dopo l'accensione	Mancata accensione per 1 minuto	Protezione lampada	Verde	Lampeggia verde	–	*	*	Automatico
20	Per 1 minuto dopo lo spegnimento	Mancata spegnimento per 1 minuto	Protezione lampada	Rosso	Lampeggia verde	–	*	*	Automatico
21	Bus IIC difettoso (HIC)	Display inferiore di tutti gli ingressi	Rilevamento guasto	*	*	*	Lampeggia verde	Lampeggia verde	Automatico
22	Bus IIC difettoso (EEPROM)	Mancata accensione	Rilevamento guasto	*	*	*	Lampeggia 2 volte verde	Lampeggia 2 volte verde	Automatico

– : LED spento
* : Conferma non necessaria
Arancione : Entrambe le luci rossa e verde
Lampeggiamento N volte rosso : Viene ripetuto il ciclo di N lampeggiamenti in rosso e si spegne per il tempo prefissato.

ITALIANO

CONTENIDO

ESPECIFICACIONES **1**
PRECAUCIONES DE SEGURIDAD **1**
AVISO 1
COMROBACIÓN EN FRÍO DE CORRIENTE DE FUGA 1
UBICACIÓN DE LOS PCBs **2**
REMOVIENDO COMPONENTES **3**
LEAD DRESS **7**
REEMPLAZO DE UNA LÁMPARA DE FUENTE DE LUZ **9**
AJUSTE DE SEGUIMIENTO DE ENFOQUE DE LENTE **10**
AJUSTES ELÉCTRICOS **11**
Equipo necesario y conexiones 11
Señal de prueba 11
Ajuste con Sistema de Operación Microsoft® Windows® 95 12
Procedimientos de ajuste 13
Ajuste del circuito de alimentación de la lámpara
1. Potencia del ajuste de la fuente de alimentación de la lámpara 13
Ajuste de circuito de preamplificador A/D
2. Ajuste de nivel de sujeción 14
3. Ajuste de Conversor A/D 15
Ajuste de circuito de ajuste de excitación de panel de cristal l'quido
4. Ajuste de fantasma 16
5. Ajuste de l'nea vertical 17
6. Ajuste de parpadeo 18
INDICACIÓN DE ERRORES DEL LED **19**
OPTION BOARD INSTALLATION
PARTS LIST
REPACKING PROCEDURE
ELECTRICAL PARTS AND OTHERS
IC BLOCK DIAGRAM
SCHEMATIC DIAGRAM
PRINTED CIRCUIT BOARD PARTS LAYOUT

ESPAÑOL

MARCA COMERCIAL, MARCA REGISTRADA

Apple, Macintosh son marcas registradas de Apple Computer Inc.
IBM, VGA, PS/2 son marcas registradas de International Business Corporation.
Microsoft®, Windows® 95, son marcas registradas de Microsoft en los EE.UU. y en otros países.
Otras marcas o nombres de producto son marcas comerciales o marcas registradas de sus respectivos propietarios.

ESPECIFICACIONES

- **Alimentación nominal** : CA 100~240V ; 50 / 60Hz
- **Entrada nominal** : 5,0A
- **Paneles LCD** : Panel LCD de 1,9 pulgadas ; 3 unidades (para R,G,B)
  Pixels 1.024 × 768= 786.432 pixels
  Relación activa de pixels : 99,99% o más (cada panel)
- **Objetivo de proyección** : F 2,3~2,7 f = 53,3~69,3 mm
- **Lámpara de la fuente de luz** : Lámpara de haluro de metal de 330 W
- **Tamaño de la imagen** : Formato 4:3 40~300 pulgadas
- **Altavoces** : Tipo redondo de 60 mm × 2unidades
- **Entrada S-Video** : eñal de luminosidad :1,0 Vp-p 75 Ù (sincronización negativa)
  Señal de crominancia : 0,286Vp-p 75 Ù (señal de sincronización cromática)
- **Entrada de video** : 1,0 Vp-p 75 Ù (sincronización negativa)
- **Entrada audio** : 350mVrms, 10kΩ or more
- **Entradas de audio para PC** : 350mVrms, 10kΩ or more
- **Entrada analog RGB** : Mini D-SUB 15P
  RGB: 0.7Vp-p 75Ω (positive sync.)
  YCbCr: 1,0Vp-p (sincronización negativa)
  Cb, Cr: 0,7Vp-p
  HD/CS: TTL level (positive)
  VD: TTL level (positive)
- **Dimensiones exteriores** : 330(An) × 145(Al) × 398(P) mm
  No se incluyen patas y piezas del lente.
- **Peso** : 21,5 lbs. (9,8kg)
- **Largo del cable de alimentación** : 114 inch (2,9 m)

- El peso y las dimensiones mostradas son aproximadas.
- El Diseño y las especificaciones están sujetos a cambios sin previo aviso.

PRECAUCIONES DE SEGURIDAD

Nota: Observe todas las precauciones y notas relacionadas con la seguridad ubicadas dentro de la caja del proyector y en el chasis del proyector.

AVISO

1. Un transformador aislado debe usarse entre el proyector y el punto de suministro de CA antes de que se efectúe cualquier prueba/servicio en un proyector de chasis VIVO.
2. La operación del proyector fuera de la caja o con la cubierta removida, implica un peligro de electrocución de los suministros de corriente de proyector. Nadie que no esté completamente familiarizado con las precauciones necesarias debe tratar de trabajar en el proyector cuando funcione en un equipo de alto voltaje.
3. Cuando se requiera servicio, observe el revestimiento original de conductor. Debe ponerse extra precaución para asegurar correcto revestimiento del conductor en el área de alto voltaje. Donde haya ocurrido un cortocircuito, reemplace esos componentes que indican evidencia de recalentamiento.

COMROBACIÓN EN FRÍO DE CORRIENTE DE FUGA

Antes de devolver el proyector al cliente, se recomienda que la corriente de fuga se mida de acuerdo a los siguientes métodos.
Con el enchufe de CA removido de la fuente de CA, coloque un puente conector a través de las espigas de contacto del enchufe de CA. Usando Probador de Aislamiento de C.C. 500V, conecte un conductor al enchufe de CA ponteado y toque el otro conductor a cada parte metálica expuesta (cabezas de destornillador, etc.), particularmente cualquier parte metálica teniendo un paso de retorno al chasis. Las partes metálicas expuestas teniendo un paso de retorno al chasis deben tener una lectura de resistencia mínima de 4 megohmios. Cualquier resistencia inferior a este valor indica una anormalidad que requiere acción correctiva.

ESPAÑOL

UBICACIÓN DE LOS PCBs

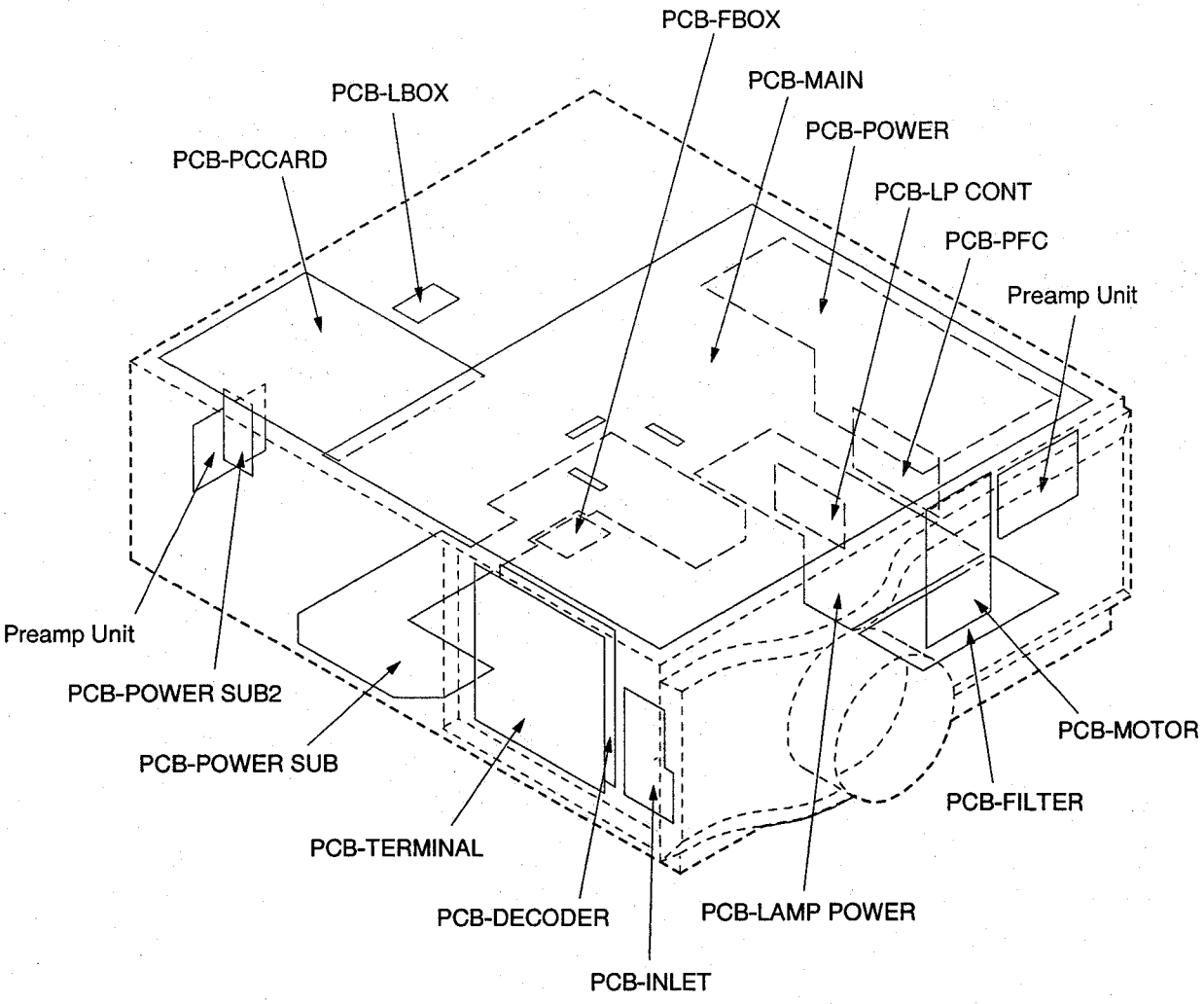

Fig. 1

ESPAÑOL

REMOVIENDO COMPONENTES

Refiera a la LISTA DE LAS PARTES para número de partes.

Nota: Asegúrese de colocar en el equipo la Top Cover Assy y la Top Case en forma separada. Si están unidas entre sí, es posible que el obturador a prueba de explosión no opere. No encienda el equipo en esas condiciones porque la lámpara podría explotar.

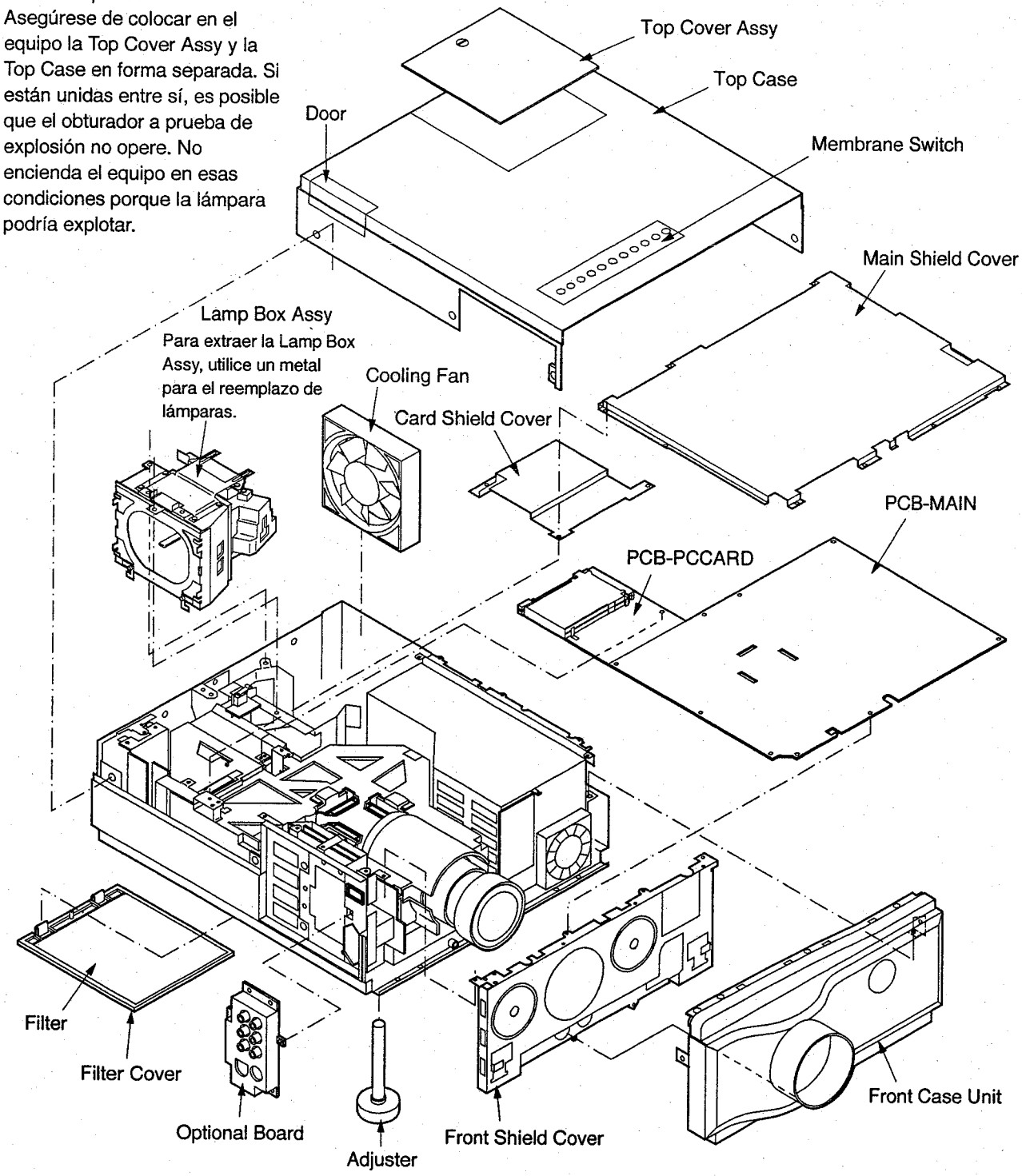

Fig. 2-1

Nombre de las Partes	Número de tornillos
Optional Board	6
Top Case	8
Top Cover Assy	1
Lamp Box Assy	2
Front Case Unit	3
Main Shield Cover	11

Parts Name	Number of Screws
Card Shield Cover	3
PCB-MAIN	8
PCB-PCCARD	4
Front Shield Cover	5
Filter Cover	(2 ganchos)

Número de Tornillos : El número de Tornillos de retención de Partes.

Tabla 1-1

ESPAÑOL

Refiera a la LISTA DE LAS PARTES para número de partes.

Nota: Los trabajadores se pondrán la banda de la muóeca para proteger LCD contra electricidad estática durante las operaciones.

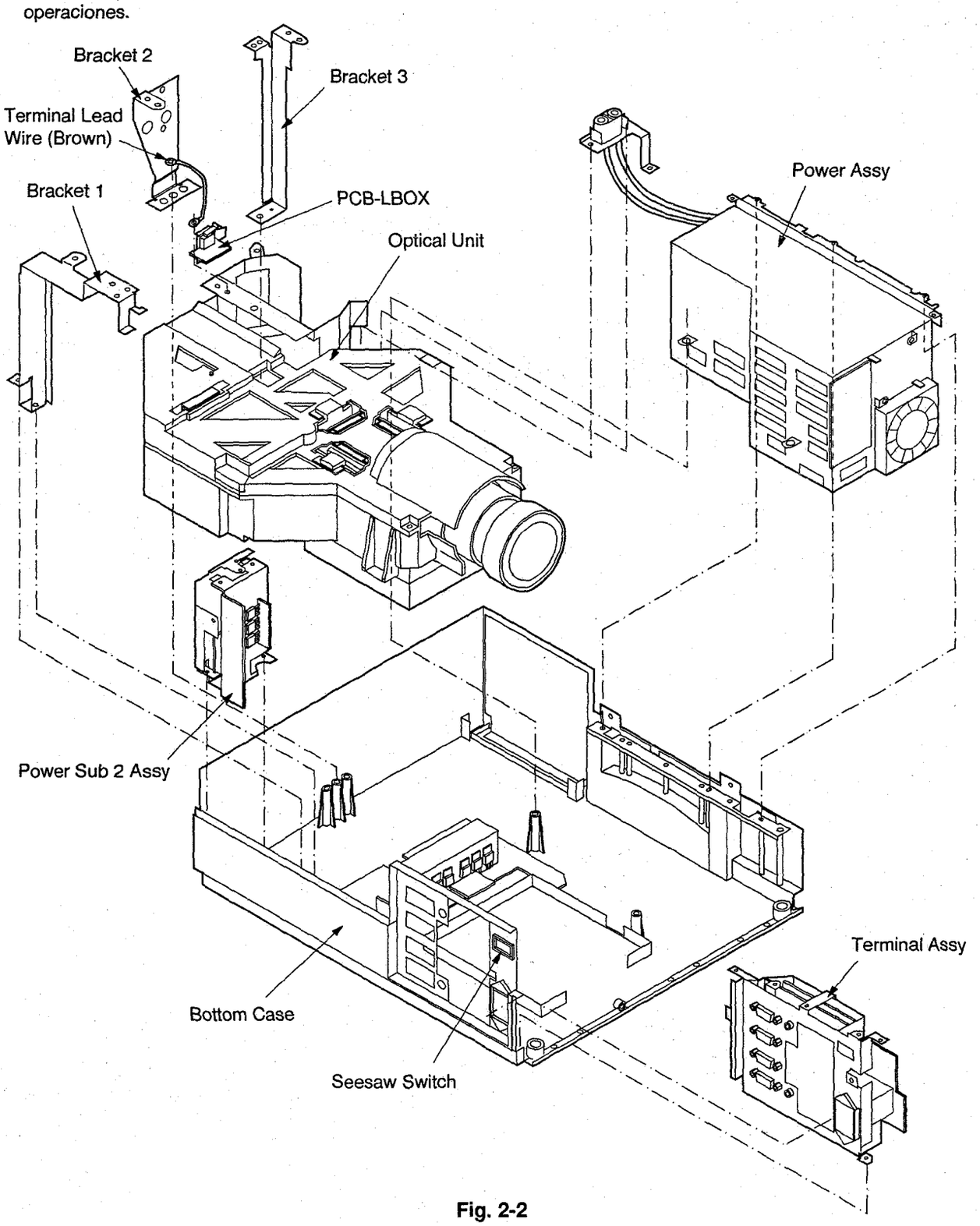

Fig. 2-2

Nombre de las Partes	Número de tornillos
Power Assy	7
Bracket 1	2
Bracket 2	1
Bracket 3	1

Nombre de las Partes	Número de tornillos
PCB-LBOX	2
Optical Unit	3
Power Sub 2 Assy	2
Terminal Assy	6

Número de Tornillos : El número de Tornillos de retención de Partes.

Tabla 1-2

ESPAÑOL

Refiera a la LISTA DE LAS PARTES para número de partes.

Nota: Los trabajadores se pondrán la banda de la muóeca para proteger LCD contra electricidad estática durante las operaciones.

Partes del Power Sub 2 Assy

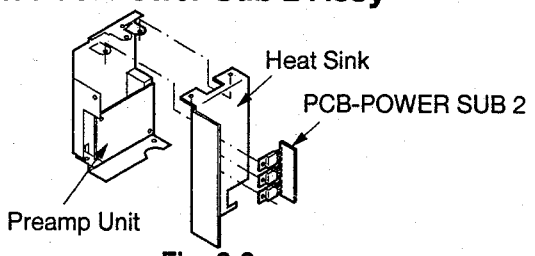

Fig. 2-3

Nombre de las Partes	Número de tornillos
PCB-POWER SUB 2	3
Heat Sink	2
PREAMP UNIT	2

Tabla 1-3

Partes del Terminal Assy

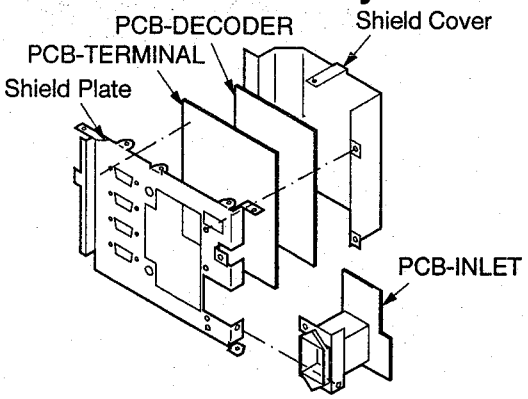

Fig. 2-4

Nombre de las Partes	Número de tornillos
Shield Cover	7
PCB-DECODER	(4 ganchos)
PCB-TERMINAL	10
PCB-INLET	3

Tabla 1-4

Partes del Power Assy

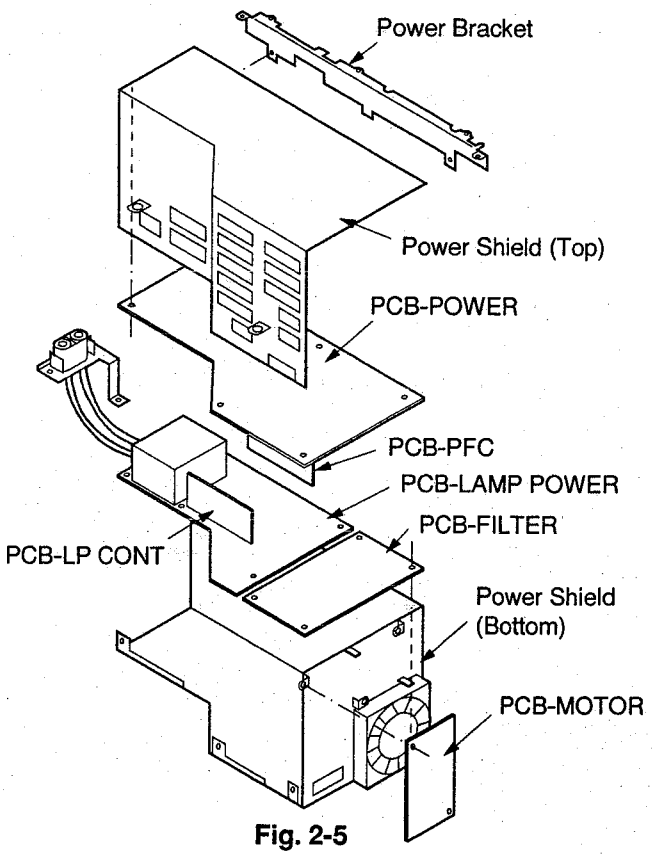

Fig. 2-5

Nombre de las Partes	Número de tornillos
Power Bracket	2
Power Shield (Top)	5
PCB-POWER	1 (5 ganchos)
PCB-PFC	ninguno
PCB-LAMP POWER	(4 ganchos)
PCB-MOTOR	2
PCB-FILTER	1 (3 ganchos)
PCB-LP CONT	ninguno

Tabla 1-5

Partes della Bottom Case

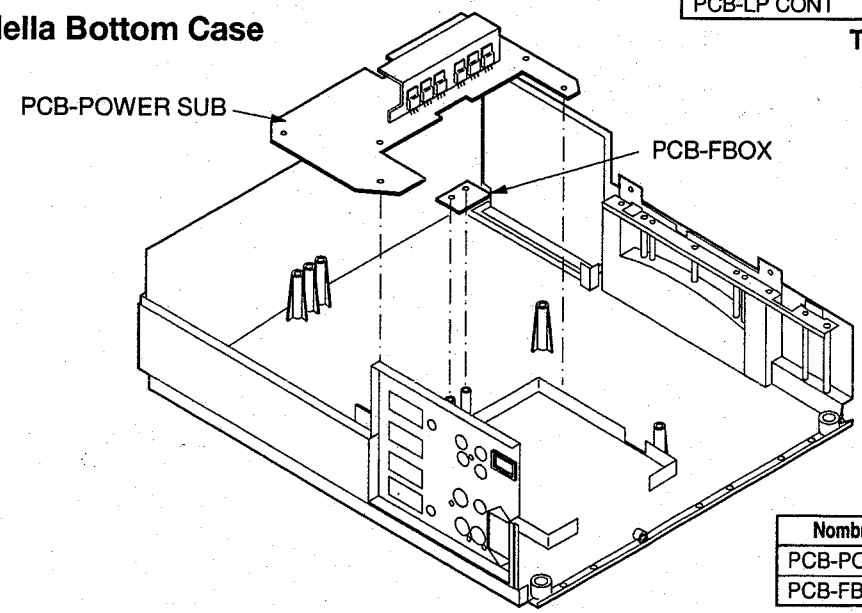

Fig. 2-6

Nombre de las Partes	Número de tornillos
PCB-POWER SUB	6
PCB-FBOX	2

Tabla 1-6

ESPAÑOL

Partes de la Optical Unit

Refiera a la LISTA DE LAS PARTES para número de partes.
* Después de reemplazar la Unidad de Lente o el Bloque LCD, ha el ajuste del seguimiento de enfoque de lente.

Nota: Los trabajadores se pondrán la banda de la muóeca para proteger LCD contra electricidad estática durante las operaciones.

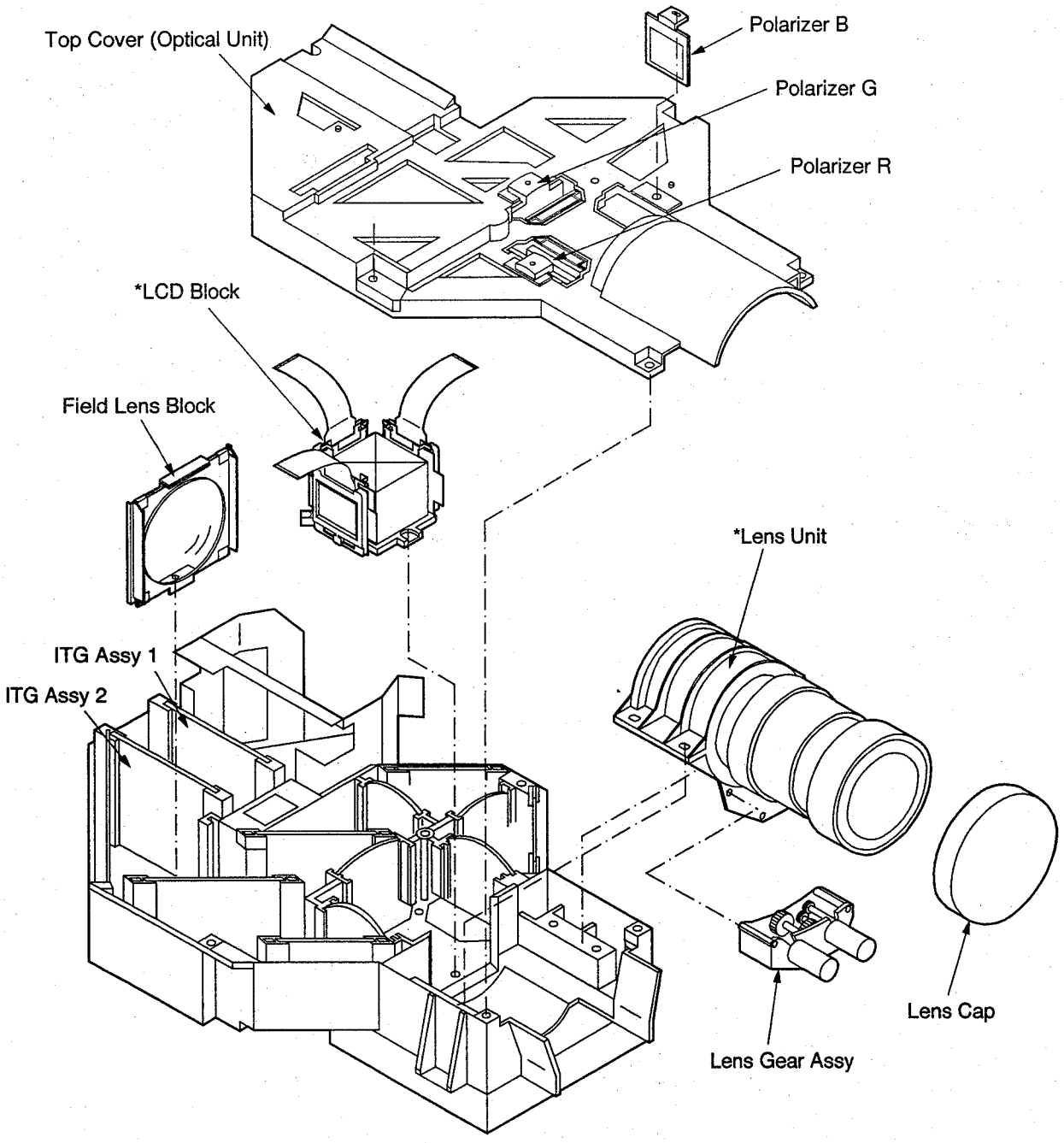

Fig. 2-7

Nombre de las Partes	Número de tornillos
Top Cover (Optical Unit)	6
Polarizer R	1
Polarizer G	1
Polarizer B	1

Nombre de las Partes	Número de tornillos
LCD Block	3
Field Lens Block	1
Lens Unit	4
Lens Gear Assy	3

Número de Tornillos : El número de Tornillos de retención de Partes.

Tabla 1-7

LEAD DRESS

Nota: 1. Los hilos internos están apretados a fin de que no vengan en contacto con partes generadoras de calor o de alto voltaje. Después de revisar, encamine todos los hilos en su posición original.
2. Los trabajadores se pondrán la banda de la muóeca para proteger LCD contra electricidad estática durante las operaciones.

1. Fije los hilos conductores a lo largo de la Zona de Fijación* mostrada en la figura de abajo.
* La Zona de Fijación muestra el camino del Hilo Conductor.

———	Zona de Fijación*
.....	Zona de Fijación oculta*

Lead Dress antes de fijarse la Óptical Unit

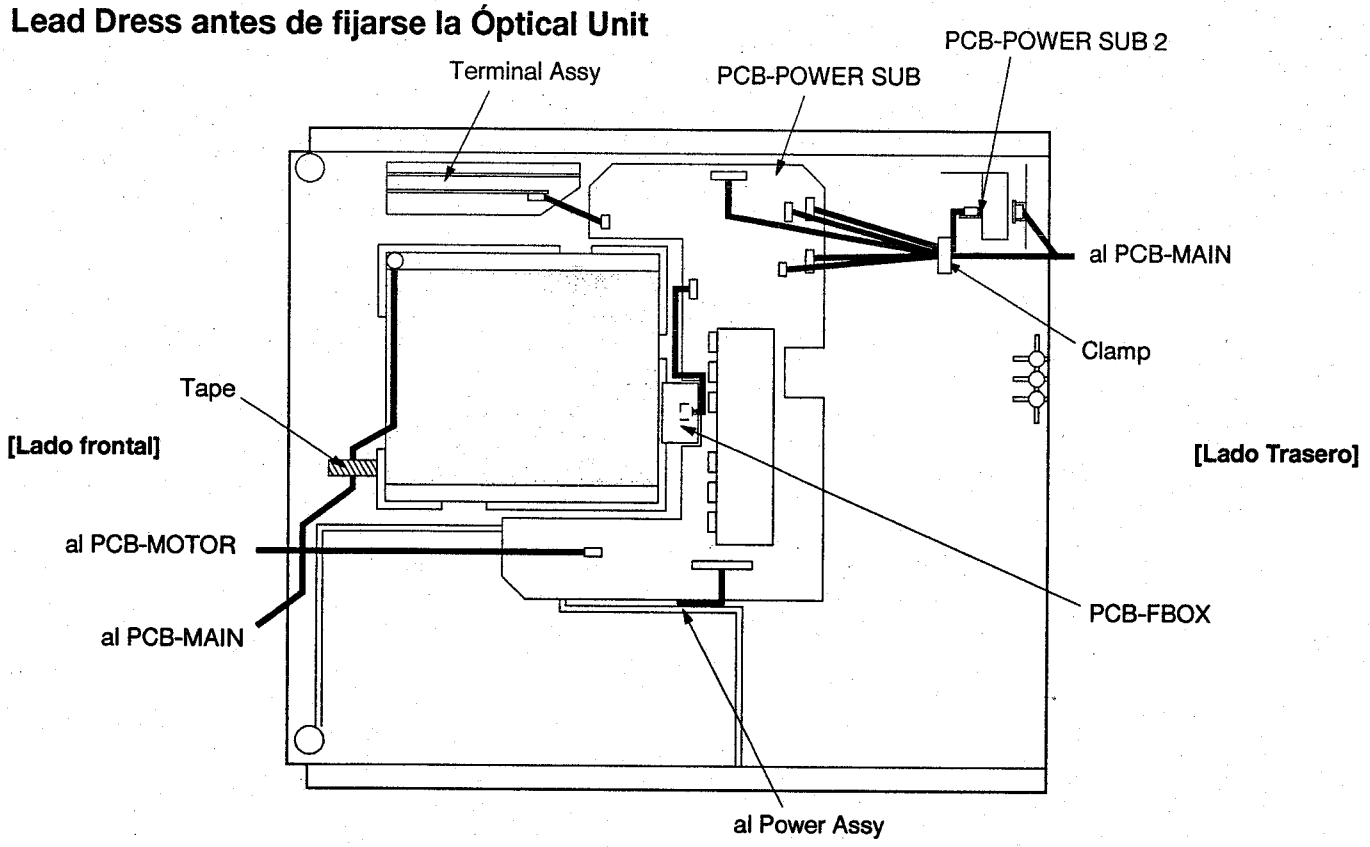

Fig. 3-1

Lead Dress cuando se fijen la Óptical Unit y el Power Assy

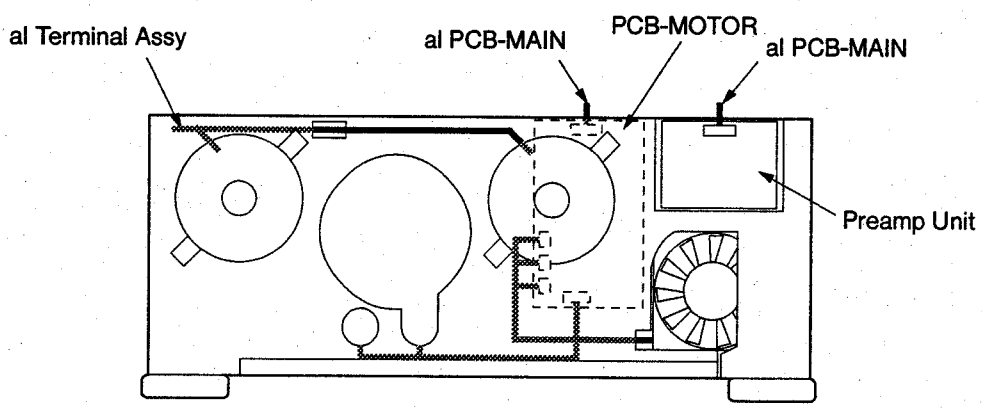

Fig. 3-2

ESPAÑOL

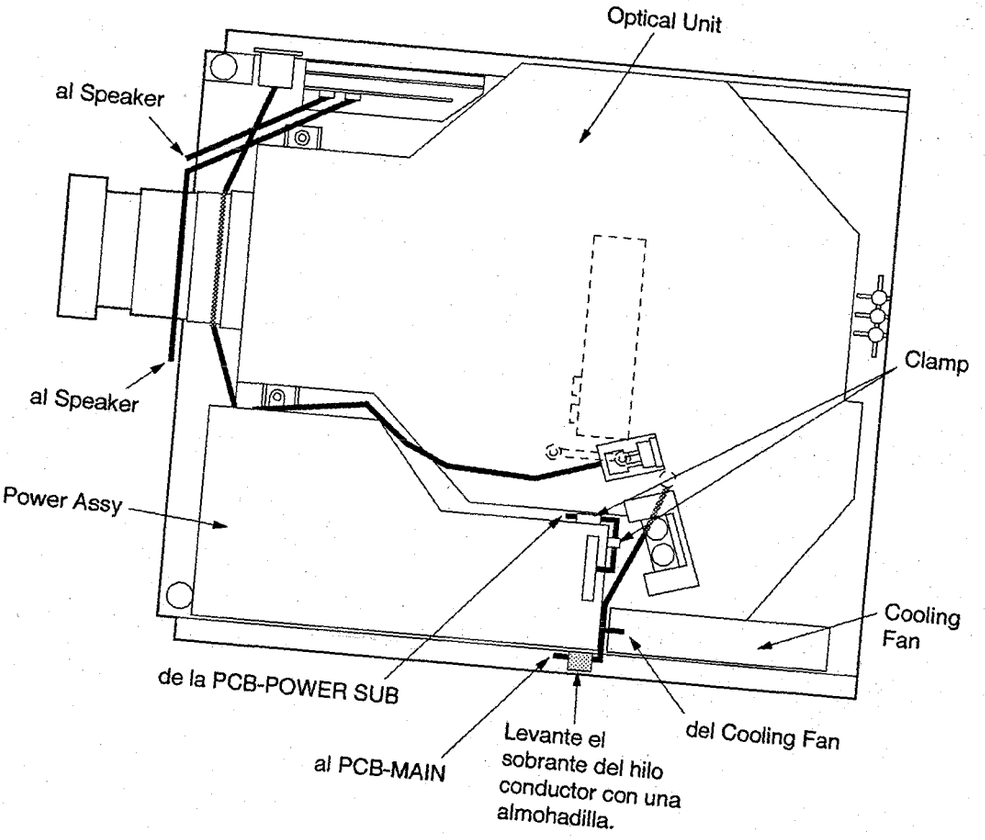

Fig. 3-3

Lead Dress cuando se fijen PCB-MAIN y Card Shield Cover

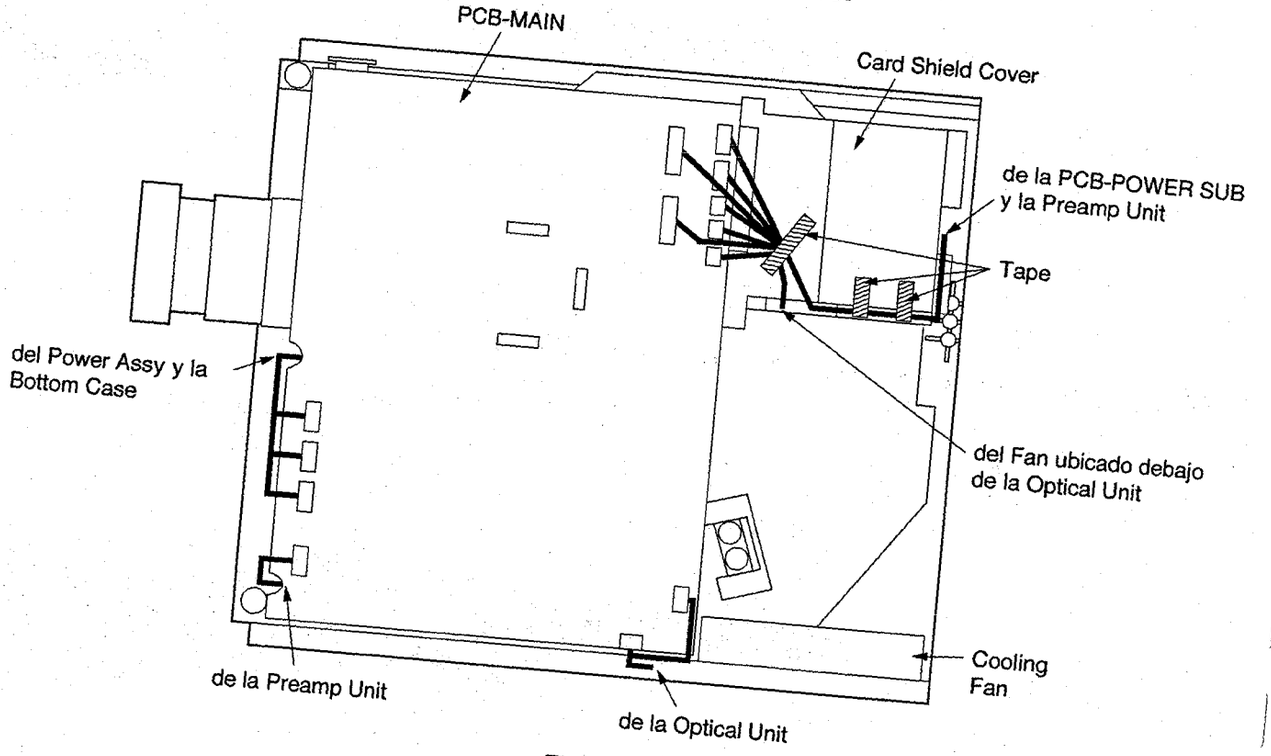

Fig. 3-4

ESPAÑOL

REEMPLAZO DE UNA LAMPARA DE FUENTE DE LUZ

La lámpara de fuente de luz está incorporada en este equipo para proyectar la imagen sobre el panel visualizador (LCD). Cuando la lámpara de fuente de luz ya no funcione, reemplácela por otra nueva para asegurar un óptimo rendimiento.

⚠ Precaución:

- No extraiga la lámpara de fuente de luz del interior del equipo inmediatamente después de terminar de usar el Proyector, porque si lo hace se puede quemar debido a la elevada temperatura de la misma.
- Al reemplazar la lámpara de fuente de luz, pulse el botón POWER para desactivar el aparato y espere 120 segundos en modo reserva para enfriar la lámpara y los paneles visualizadores (LCD) y apague el interruptor principal, después desenchufe de la toma de corriente y espere otros 60 minutos para que la lámpara esté fría al tocarla.
- No extraiga la lámpara de fuente de luz excepto con la finalidad de reemplazarla. Un tratamiento descuidado puede provocar heridas o fuego.
- No toque la lámpara directamente. Puede estar rota y causar heridas o quemar a alguien.
- Tenga cuidado de no dejar caer el tornillo de la tapa de la lámpara dentro del Proyector. Asegúrese también de no introducir objetos metálicos ni inflamables. Se puede producir fuego o descargas eléctricas. Si se introduce algún objeto, desenchufe el aparato y póngase en contacto con su distribuidor.
- Monte la lámpara con firmeza, de no hacerlo se puede provocar fuego.
- **para el personal de servicio técnico**
  Asegúrese de colocar en el equipo la Top Cover Assy y la Top Case en forma separada. Si están unidas entre sí, es posible que el obturador a prueba de explosión no opere. No encienda el equipo en esas condiciones porque la lámpara podría explotar.

1. Afloje el tornillo de la tapa de la lámpara de la cubierta superior con un destornillador (–), y retire la tapa. (Quite la cubierta de la lámpara en el sentido de la flecha, como se indica.)

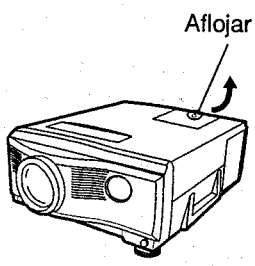

Importante:
Tenga cuidado de no dañar el cable eléctrico conectado al equipo.

2. Afloje el tornillo (a) de la parte metálica de fijación con un destornillador (+) y extráigalos.
   No afloje la parte metálica de fijación y el tornillo.

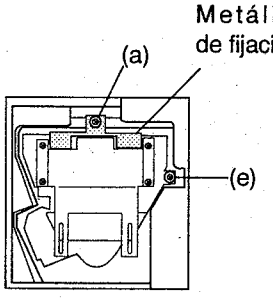

3. Coloque el metal de intercambio de lámpara en el proyector.
   1. Introduzca los accesorios metálicos para reemplazar la lámpara en las posiciones siguientes: en la cara delantera de la lámpara (2 posiciones), entre la lámpara y en los bordes inferiores (4 posiciones).
   2. Alinee los orificios de los tornillos (c) con el nodo (d).
   3. Apriete la pieza en su lugar usando los dos tornillos incluidos (b, b').

4. Afloje el tornillo de fijación de la lámpara (e) con un destornillador (+), y extráigalo.

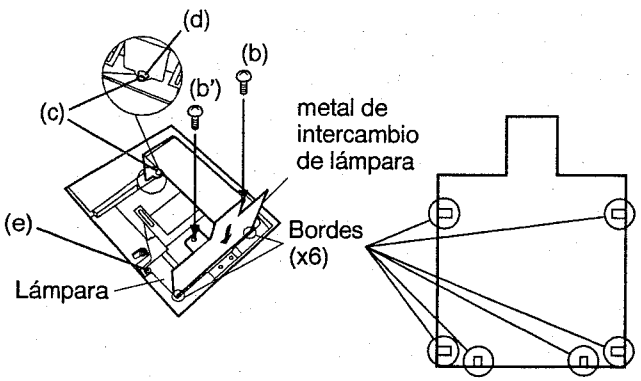

5. Sostenga el proyector por el asa mientras retira la lámpara.
   Después de haber sacado la lámpara, evite derramar líquidos sobre ella, colocarla cerca de objetos inflamables o donde los niños puedan tocarla. De lo contrario, podría causar lesiones o incendios.

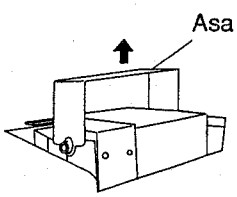

6. Inserte una lámpara nueva firmemente en el cuerpo del proyector, en el sentido correcto.

7. Ajuste el tornillo (e) que fueron extraídos en el paso 4, con un destornillador (+).

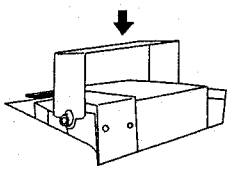

8. Afloje los dos tornillos (f), (f') de la parte metálica de fijación con un destornillador y extráigalos con la parte metálica.

9. Quite los orificios de los accesorios metálicos de reemplazo de la lámpara (c) del nodo (d).

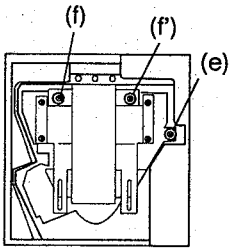

ESPAÑOL

10. Introduzca las piezas metálicas fijadas en el paso 2 en los orificios de tornillos (f) y (f'), y use un tornillo (a) para sujetar la pieza en su lugar.

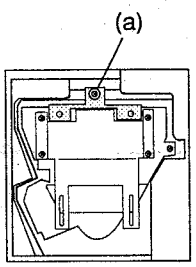

11. Apriete el tornillo de la tapa de la lámpara utilizando un destornillador (–).

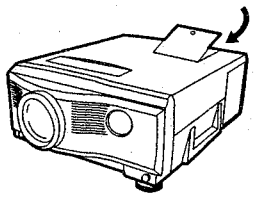

Cómo reponer el medidor del tiempo de funcionamiento

Para reajustar la cantidad de tiempo del alumbrado de la lámpara presione los botones FINE < , > y POWER en el proyector al mismo tiempo.

- No se puede extraer la lámpara del proyector a menos que se coloque la parte metálica de intercambio de lámpara.
- Si no tiene la parte metálica de intercambio de lámpara, quite el metal de la lámpara nueva y utilícelo. No toque la lámpara directamente. Puede romperse y causarle lesiones o quemaduras.

⚠ **Precaución:**

- Después de haber sacado la lámpara, evite derramar líquidos sobre ella, colocarla cerca de objetos inflamables o donde los niños puedan tocarla. De lo contrario, podría causar lesiones o incendios.
- Asegúrese de que la guía del proyector esté firmemente insertada entre las guías de lámpara derecha e izquierda.

Importante:

- El medidor del tiempo de funcionamiento debe reponerse después de haber reemplazado la lámpara.
- No reponga el medidor del tiempo de funcionamiento a menos que haya reemplazado la lámpara.
- No toque la lámpara directamente, coloque un trapo sobre la lámpara de recambio.

El tiempo de vida de la lámpara

El promedio de vida de la lámpara para este proyector es de unas 1.000 horas de uso consecutivo. La duración puede cambiar según el ambiente de funcionamiento, y puede ser inferior a 1.000 horas. La disminución en luminiscencia y/o en el brillo del color indicará que la lámpara de la fuente de luz necesita ser reemplazada. Cuando el tiempo de funcionamiento de la lámpara exceda 1.000 horas, el indicador parpadeará alternativamente entre verde y rojo mientras se usa la lámpara. Cuando la lámpara no funcione, el indicador aparecerá en color rojo. Cuando la lámpara ha sido utilizada por un espacio de tiempo de 1.250 horas, la indicación "LAMP!!" aparecerá en pantalla. Cuando la lámpara halla sido utilizada por más 1.300 horas, el proyector se desconectará automáticamente por la seguridad de la lámpara y los indicadores de la alimentación se encenderán de color rojo. No se podrá utilizar el proyector hasta que la lámpara sea reemplazada.

⚠ **Precaución:**

- La lámpara del proyector es frágil. Tenga cuidado de no cortarse con los fragmentos en caso que se quebrara.
- La vida de la lámpara depende del medio ambiente en el que se encuentre. Para su recambio, por favor contacte a su distribuidor.

El proyector se paga automáticamente cuando la lámpara excede 1,300 horas de uso, y no se puede usar de nuevo hasta que se reemplaze la lámpara.

ESPAÑOL

AJUSTE DE SEGUIMIENTO DE ENFOQUE DE LENTE

Después de reemplazar la Lens Unit o el LCD Block, haga este ajuste. Fije la Lens Unit para optimizar enfoque cuando alejamiento y acercamiento de zoom al máximo.

1. Afloje los cuatro tornillos que aseguran la Lens Unit. Coloque los tornillos alrededor del centro de los agujeros para tornillo (el'pticos).
2. Pulse el botón FOCUS/ZOOM para indicar "ZOOM" en la pantalla.
3. Pulse el botón "ADJUST+" para alejamiento total de zoom (a la imagen menor).
4. Optimice el enfoque de los pixeles en la pantalla.
5. Indique el "ZOOM" en la pantalla. Pulse el botón "ADJUST-" para acercamiento total de zoom (a la imagen más grande).
6. Inserte un destornillador menos]equivalente a un tamaño de pulgada de 0,24 × 4 (6 × 100 mm)] en el agujero triangular para ajuste de seguimiento. Gire el destornillador para optimizar el enfoque de los pixeles en la pantalla. La Lens Unit se mueve adelante y atrás girando el destornillador.
7. Indique el "ZOOM" en la pantalla. Pulse el botón "ADJUST+" para el alejamiento total de zoom.
8. Observe el enfoque. Cuando el enfoque está optimizado, este ajuste está completo. Si no, haga este ajuste de nuevo desde el paso 4.
9. Apriete los cuatro tornillos. (torsión de tornillo 14±2kgf·m)

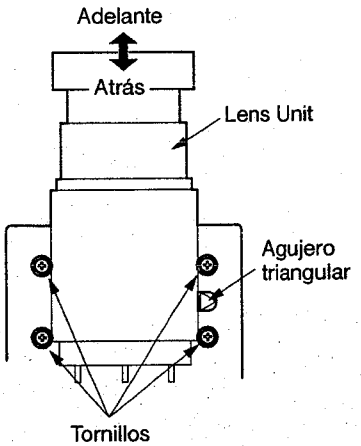

Optical Unit

AJUSTES ELÉCTRICOS

Use el sistema de operación de programa de comunicación [Hyper Terminal] de Microsoft® Windows® 95 para cada ajuste de circuito de este producto.

❑ Equipo Necesario y Conexiones

Conecte el siguiente equipo como se muestra en la figura de la derecha.

- LVP-X200E
- Computador personal (con Sistema de Operación Microsoft® Windows® 95)
- Cable RS-232C
- Generador de Señales XGA (Equivalente a VG-814)
- Generador de Señales NTSC
- Generador de Señales PAL
- Monitor para Computador Personal

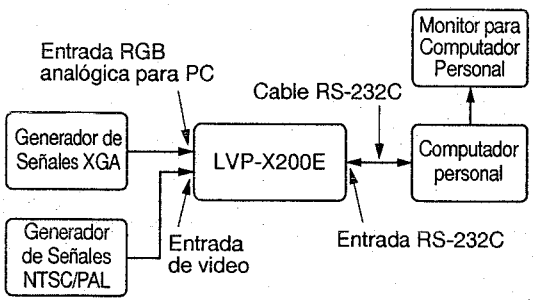

❑ Señal de Prueba

- Señal de barras de color NTSC (Compuesta)
- Señal de barras de color PAL (Compuesta)
- Señal XGA (Frecuencia horizontal 60 Hz)
  La sincronización y patrones para el ajuste son como sigue:

Sincronización H

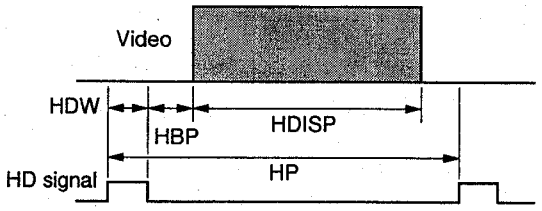

Sincronización V

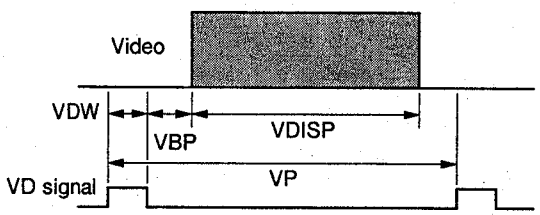

Programa ROM : LC6 Ver. 1.1

No. de Programa	Patrón
01	Trama blanco 100%
12	Trama blanco 50%
15	Cada otra l'nea horizontal (Roja)
16	Cada otra l'nea horizontal (Verde)
17	Cada otra l'nea horizontal (Azul)
35	SMTPE (Roja)
36	SMTPE (Verde)
37	SMTPE (Azul)

Sincronización de señal XGA (Frecuencia Horizontal 60 Hz)

DOT-CLOCK [MHz]	65.0	VP [H]	806
HP [DOT]	1344	VDISP [H]	768
HDISP [DOT]	1024	VDW [H]	6
HDW [DOT]	136	VBP [H]	29
HBP [DOT]	160	Entrelazado	—
		Polaridad de Señal	HD : –, VD : –

ESPAÑOL

❑ Ajuste con Sistema de Operación Microsoft® Windows® 95

1. Puesta en marcha

1. Active Windows® 95.
2. Doble clic sujetador [Accessories].
3. Doble clic sujetador [Hyper Terminal].
4. Doble clic icon [Hyper Trm].

2. Puesta de Hyper Terminal

1. Clic [Properties] en menú de Archivo en ventanilla de Hyper Terminal.
   Se abrirá ventanilla de [Connection Properties]. Fije como sigue en esta ventanilla.
2. Clic [Connecting] en menú de comunicación de la ventanilla para conectar LVP-X200E.

Ítem		Puesta
Comm. Port		Port (COM1-COM4)
Port setting	: Bit/sec	9600
	: Data bit	8 bit
	: Parity	None
	: Stop bit	1
	: Flow control	Hardware
Setting	: Emulation	VT100
ASCII setting	: Sending ASCII	Put a line feed character at the end of the line
		Local echo
		Delay (Line) : 1000msec.
		Delay (Character) : 10msec.
	: Receiving ASCII	Put a line feed character at the end of received data

3. Ajuste

Entre el mando de ajuste y el valor de ajuste en la ventanilla Hyper Terminal en mayúsculas con el teclado y pulse la tecla entrar.

4. Escribiendo valor de ajuste

Entre el mando de inscripción y el valor de ajuste de la ventanilla Hyper Terminal en mayúsculas con el teclado y pulse a tecla entrar.

Nota: Esta operación no es necesaria para el ajuste 2 (Nivel de sujectión) y 3 (Conversor A/D) del ajuste automático.

5. Cierre la ventanilla

Clic el botón de cierre colocado en la parte superior derecha de la ventanilla para cerrar el Hyper Terminal.
Cierre Windows® 95 después de cerrar todas la ventanillas de abertura.

ESPAÑOL

Procedimientos de Ajuste

[Circuito de alimentación de la lámpara]	Fin de ajuste	Ajustar al valor correcto la potencia suministrada a la lámpara.
1. Potencia de la fuente de alimentación de la lámpara	S'ntoma cuando ajustado correctamente	La lámpara no tiene el brillo especificado o puede estallar.

Instrumento de medición	Amperímetro, Voltímetro
Punto de prueba	Potencia de salida de la lámpara
Disparador EXT	——
Gama de medición	——
Señal de entrada	——
Terminal de entrada	——

*Complete este ajuste un minuto después de haber encendido el equipo.

1. Retire del equipo la lamp box y la main shield cover.
2. Conecte un amperímetro, un voltímetro y una resistencia de carga falsa (resistencia no inductiva de 12Ω 350 W) con la potencia de salida de la lámpara, según indica la figura.
3. Encienda el equipo.
4. Ajuste VR9V0 (PCB-LAMP POWER) de modo tal que la salida sea de 338± 2W (64V de tensión, 5,28A de corriente, que se encuentre dentro del rango que indican la tabla y el gráfico siguientes). Ajuste VR9V0 por medio del orificio de ajuste ubicado en la PCB-MAIN.

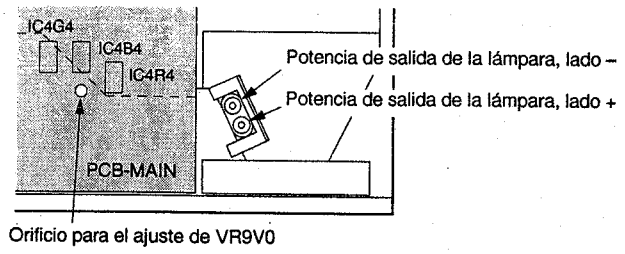

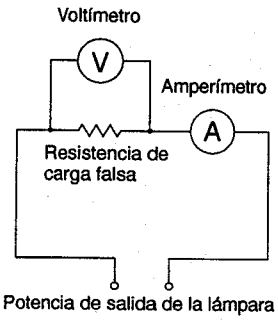

Conexión para los instrumentos de medición

Tabla resumen del ajuste

Tensión V	Corriente A (máximo)	Corrientet A (mínimo)
63.60	5.35	5.28
63.65	5.34	5.28
63.70	5.34	5.27
63.75	5.33	5.27
63.80	5.33	2.27
63.85	5.32	5.26
63.90	5.32	5.26
63.95	5.32	5.25
64.00	5.31	5.25
64.05	5.31	5.25
64.10	5.30	5.24
64.15	5.30	5.24
64.20	5.30	5.23
64.25	5.29	5.23
64.30	5.29	5.23
64.35	5.28	5.22
64.40	5.28	5.22
64.45	5.28	5.21
64.50	5.27	5.21
64.55	5.27	5.21
64.60	5.26	5.20

Rango de ajuste de la potencia de la lámpara

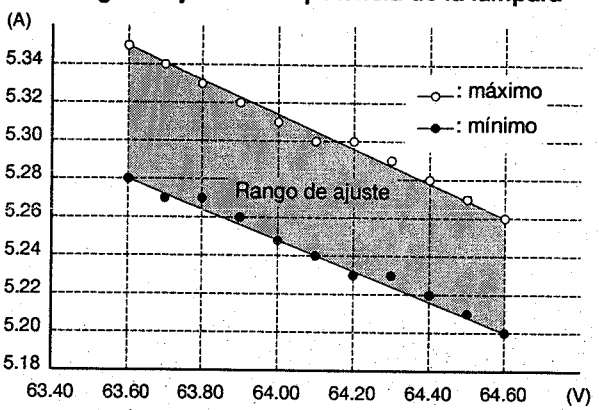

ESPAÑOL

[Circuito de Pre-amplificador A/D] 2. Nivel de Sujeción	**Fin de ajuste**	Para fijar nivel DC de una señal de imagen a entrarse en convertidor A/D.
	S'ntoma cuando ajustado correctamente	La imagen monocroma tiene un tinte de color.

Instrumento de medición	---
Punto de prueba	---
Disparador EXT	---
Gama de medición	---
Señal de entrada	Señal XGA (Blanco 100%, No. 01)
Terminal de entrada	Entrada RGB analógica para PC

* Ingrese el comando de ajuste con caracteres alfanuméricos mayúsculas.

1. Conecte LVP-X200E con un computdor personal (con Sistema de Operación de Microsoft, Windows, 95). (*Refiera a la figura de P.11*)
2. Active Microsoft® Windows® 95 en el computador personal.
3. Active el programa de comunicación [Hyper Terminal] en Microsoft® Windows® 95 para abrir la ventanilla. (Para fijar, refiera transmisión Hyper Terminal en P.12)
4. Reajuste el modo normal del menú principal de este producto.

RGB

5. Suministre señal XGA (Blanco 100%, No.01).
6. Entre [00~70] (Mando de ajuste de sujeción de entrada RGB) en la ventanilla Hyper Terminal y el ajuste automático comenzará.
7. Luego del ajuste, el comando de retorno [00~70111] aparece indicado en la ventana de Hyper Terminal.
   Las últimas 3 cifras del comando de retorno indican el resultado del ajuste y cada cifra corresponde al R (rojo), G (verde) y B (azul), en orden. La cifra 1 significa que el ajuste tuvo éxito. La cifra 0 significa que falló el ajuste a causa de defectos de las PCBs, señales incorrectas o selección de entrada incorrecta.

VIDEO

8. Suministre señal NTSC (barras de color) al terminal de entrada de v'deo.
9. Entre [00~71] (Mando de ajuste de sujeción de entrada de VÍDEO) en la ventanilla Hyper Terminal y el ajuste automático comenzará.
10. Luego del ajuste, el comando de retorno [00~7111] aparece indicado en la ventana de Hyper Terminal.
    Las últimas 2 cifras del comando de retorno indican el resultado del ajuste y cada cifra corresponde a R-Y y B-Y. La cifra 1 significa que el ajuste tuvo éxito. La cifra 0 significa que falló el ajuste a causa de defectos de las PCBs, señales incorrectas o selección de entrada incorrecta.

ESPAÑOL

[Circuito de Pre-amplificador A/D] 3. Conversor A/D	**Fin de ajuste**	Para fijar amplitud de una señal de v'deo a entrarse en convertidor A/D.
	S'ntoma cuando ajustado correctamente	La imagen monocroma tiene un tinte de color.

Instrumento de medición	---
Punto de prueba	---
Disparador EXT	---
Gama de medición	---
Señal de entrada	Señal XGA (Blanco 100%, No. 01)
Terminal de entrada	Entrada RGB analógica para PC

* Ingrese el comando de ajuste con caracteres alfanuméricos mayúsculas.

1. Conecte LVP-X200E con un computdor personal (con Sistema de Operación de Microsoft® Windows® 95). (Refiera a la figura de P.11)
2. Active Microsoft® Windows® 95 en el computador personal.
3. Active el programa de comunicación [Hyper Terminal] en Microsoft® Windows® 95 para abrir la ventanilla. (Para fijar, refiera transmisión Hyper Terminal en P.12)
4. Reajuste el modo normal del menú principal de este producto.
5. Suministre señal XGA (Blanco 100%, No.01).
6. Entre [00~5] (Comando de ajuste A/D) en la ventanilla Hyper Terminal y el ajuste automático comenzará.
7. Luego del ajuste, el comando de retorno [00~5111] aparece indicado en la ventana de Hyper Terminal.
   Las últimas 3 cifras del comando de retorno indican el resultado del ajuste y cada cifra corresponde al R (rojo), G (verde) y B (azul), en orden. La cifra 1 significa que el ajuste tuvo éxito. La cifra 0 significa que falló el ajuste a causa de defectos de las PCBs, señales incorrectas o selección de entrada incorrecta.

ESPAÑOL

[Circuito de Ajuste de Excitación de Panel de Cristal L'quido] 4. Fantasma	**Fin de ajuste**	Para remover fantasmas de la pantalla.
	S'ntoma cuando ajustado correctamente	Fantasmas aparecen cada 12 elementos de imagen.

Instrumento de medición	—
Punto de prueba	—
Disparador EXT	—
Gama de medición	—
Señal de entrada	Señal XGA (SMTPE(R), No. 35)
Terminal de entrada	Entrada RGB analógica para PC

* Haga este ajuste sólo cuando fantasmas distintamente aparecen en la pantalla.
* Ingrese el comando de ajuste con caracteres alfanuméricos mayúsculas.

1. Conecte LVP-X200E con un computdor personal (con Sistema de Operación de Microsoft® Windows® 95). (Refiera a la figura de P.11)
2. Active Microsoft® Windows® 95 en el computador personal.
3. Active el programa de comunicación [Hyper Terminal] en Microsoft® Windows® 95 para abrir la ventanilla. (Para fijar, refiera a puesta de terminal Hyper Terminal en P.12)
4. Reajuste el modo normal del menú principal de este producto.

Rojo

5. Proyecte imágenes en la pantalla.
6. Suministre señal XGA (SMTPE(R), No.35).
7. Opere la fuente de señal a proyectarse en monocromo rojo en la pantalla.
8. Entre el mando de ajuste [00~3123□□] en la ventanilla de ajuste Hyper Terminal para minimizar los fantasmas rojos. Ingrese [99], [AA], [BB], [CC] o [DD] en □□ para lograr un fantasma mínimo. Antes del ajuste, se escribió [BB] en □□ .
   (*1) Cuando se indica el comando enviado, significa que se logró el envío correctamente. Es posible confirmar el valor actual enviando el comando sin ingresar ningún valor en □□ .
9. Ingrese el comando para escribir [00~1E93□□] en la ventana de Hyper Terminal, y escriba el valor modificado en la EEPROM. Ingrese el valor de la etapa 8 en □□ . (*1)

Verde

10. Suministre señale XGA (SMTPE(G), No.36).
11. Opere la fuente de señal a proyectarse en monocromo verde en la pantalla.
12. Entre el mando de ajuste [00~3223□□] en la ventanilla de Hyper Terminal para minimizar los fantasmas verdes. Ingrese [99], [AA], [BB], [CC] o [DD] en □□ para lograr un fantasma mínimo. Antes del ajuste, se escribió [BB] en □□ . (*1)
13. Ingrese el comando para escribir [00~1EAA□□] en la ventana de Hyper Terminal, y escriba el valor modificado en la EEPROM. Ingrese el valor de la etapa 12 en □□ . (*1)

Azul

14. Suministre señale XGA (SMTPE(B), No.37).
15. Opere la fuente de señal a proyectarse en monocromo azul en la pantalla.
16. Entre el mando de ajuste [00~3323□□] en la ventanilla de Hyper Terminal para minimizar los fantasmas azules. Ingrese [99], [AA], [BB], [CC] o [DD] en □□ para lograr un fantasma mínimo. Antes del ajuste, se escribió [BB] en □□ . (*1)
17. Ingrese el comando para escribir [00~1EC1□□] en la ventana de Hyper Terminal, y escriba el valor modificado en la EEPROM. Ingrese el valor de la etapa 16 en □□ . (*1)

ESPAÑOL

[Circuito de Ajuste de Excitación de Panel de Cristal L'quido] 5. L'nea Vertical	**Fin de ajuste**	Para remover l'neas verticales de la pantalla.
	S'ntoma cuando ajustado correctamente	L'neas verticales aparecen cada 12 elementos de imagen.

Instrumento de medición	—
Punto de prueba	—
Disparador EXT	—
Gama de medición	—
Señal de entrada	Señal XGA (Blanco 50%, No. 12)
Terminal de entrada	Entrada RGB analógica para PC

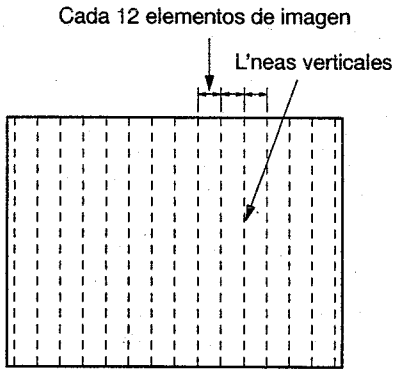

* Haga este ajuste sólo cuando l'neas verticales distintamente aparecen en la pantalla.
* Ingrese el comando de ajuste con caracteres alfanuméricos mayúsculas.

1. Conecte LVP-X200E con un computdor personal (con Sistema de Operación de Microsoft® Windows® 95). (Refiera a la figura de P.11)
2. Active Microsoft® Windows® 95 en el computador personal.
3. Active el programa de comunicación [Hyper Terminal] en Microsoft® Windows® 95 para abrir la ventanilla. (Para fijar, refiera a puesta de Hyper Terminal en P.12)
4. Reajuste el modo normal del menú principal de este producto.
5. Suministre señal XGA (Blanco 50%, No.12).
6. Proyecte imágenes en la pantalla.
7. Entre el mando de ajuste [00~227 □□] en la ventanilla de Hyper Terminal para minimizar l'neas verticales. Entre cualquier valor de [10h] a [FFh] en □□ para minimizar l'neas verticales. [10h] se ha escrito en □□ antes del ajuste.
   (*1) Cuando se indica el comando enviado, significa que se logró el envío correctamente. Es posible confirmar el valor actual enviando el comando sin ingresar ningún valor en □□ .
8. Ingrese el comando para escribir [00~1F2B□□] en la ventana de Hyper Terminal, y escriba el valor modificado en la EEPROM. Ingrese el valor de la etapa 7 en □□ . (*1)

ESPAÑOL

[Circuito de Ajuste de Excitación de Panel de Cristal L'quido] 6. Parpadeo	**Fin de ajuste**	Para remover parpadeos de la pantalla.
	S'ntoma cuando ajustado correctamente	Aparecen parpadeos.

Instrumento de medición	---
Punto de prueba	---
Disparador EXT	---
Gama de medición	---
Señal de entrada	Señal XGA (L'nea horizontal cada otro elemento de imagen roj, No.15)
Terminal de entrada	Entrada RGB analógica para PC

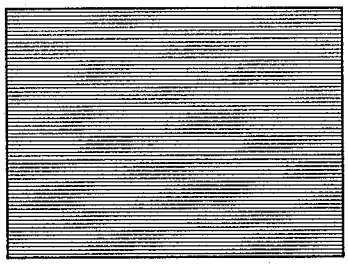

L'nea horizontal cada otro elemento de imagen

* Haga este ajuste sólo cuando parpadeos distintamente aparecen en la pantalla.
* Ingrese el comando de ajuste con caracteres alfanuméricos mayúsculas.

1. Conecte LVP-X200E con un computdor personal (con Sistema de Operación de Microsoft® Windows® 95). (Refiera a la figura de P.11)
2. Active Microsoft® Windows® 95 en el computador personal.
3. Active el programa de comunicación [Hyper Terminal] en Microsoft® Windows® 95 para abrir la ventanilla. (Para fijar, refiera a puesta de Hyper Terminal en P.12)
4. Reajuste el modo normal del menú principal de este producto.

Rojo

5. Suministre una señal XGA (L'nea horizontal cada otro elemento de imagen roj, No.15).
6. Proyecte imágenes en la pantalla.
7. Entre el mando de ajuste [00~229 □□] en la ventanilla de Hyper Terminal para minimizar parpadeos rojos. Entre cualquier valor de [00h] a [FFh] en □□ para minimizar parpadeos. [A0h] se ha escrito en □□ antes del ajuste.
   (*1) Cuando se indica el comando enviado, significa que se logró el envío correctamente. Es posible confirmar el valor actual enviando el comando sin ingresar ningún valor en □□ .
8. Ingrese el comando para escribir [00~1F2D □□] en la ventana de Hyper Terminal, y escriba el valor modificado en la EEPROM. Ingrese el valor de la etapa 7 en □□ . (*1)

Verde

9. Suministre una señal XGA (L'nea horizontal cada otro elemento de imagen verde, No. 16).
10. Entre el mando de ajuste[00~22A □□] en la ventanilla de Hyper Terminal para minimizar los parpadeos verdes. Entre cualquier valor de [00h] a [FFh] en □□ para m'nimos parpadeos. [A0h] se ha escrito en □□ antes del ajuste. (*1)
11. Ingrese el comando para escribir [00~1F2E □□] en la ventana de Hyper Terminal, y escriba el valor modificado en la EEPROM. Ingrese el valor de la etapa 10 en □□ . (*1)

Azul

12. Suministre una señal XGA (L'nea horizontal cada otro elemento de imagen azul, No. 17).
13. Entre el mando de ajuste [00~22B □□] en la ventanilla de Hyper Terminal para minimizar los parpadeos azules. Entre cualquier valor de [00h] a [FFh] en □□ para minimizar parpadeos. [A0h] se ha escrito en □□ antes del ajuste. (*1)
14. Ingrese el comando para escribir [00~1F2F □□] en la ventana de Hyper Terminal, y escriba el valor modificado en la EEPROM. Ingrese el valor de la etapa 13 en □□ . (*1)

ESPAÑOL

INDICACIÓN DE ERRORES DEL LED

Este equipo cuenta con una función de autodiagnóstico. En caso de anomalías, el LED ubicado en la parte superior del equipo indica los errores.

Método de diagnóstico : Cada vez que se enciende la alimentación principal, se enciende el SW y se realiza una verificación de errores de 4 segundos en cada sensor. El POWER LED permanece en rojo durante la verificación.

Indicación del resultado del diagnóstico : En la tabla siguiente se presentan los errores y la indicación del LED. Es posible volver el LED a cero "automáticamente" o "encendiendo/apagando la alimentación principal" una vez completada la detección de fallas.

Encendido forzado : Cuando no es posible encender el equipo por falta de corriente de STBY o falta de corriente de SW, presione simultáneamente los 3 botones RGB (Rojo, Verde, Azul), VIDEO (vídeo) y CARD (tarjeta) ubicados en la parte superior del equipo durante los 4 segundos de la verificación del sensor, con el fin de encender el equipo para realizar la detección de fallas. En este caso, operan los circuitos de protección, excepto para la falta de corriente de STBY y de SW.

Lista de indicación de errores del LED

Orden de preferencia	Falla	Síntoma	Objetivo	Indicación del LED					Puesta a cero
				POWER	LAMP	TEMP	CARD1	CARD2	
1	Falta de corriente de STBY	No enciende	Detección de fallas	Rojo/Verde alternativamente	Anaranjado	Rojo intermitente 2	*	*	Alimentación principal
2	Falta de corriente de SW	No enciende	Detección de fallas	Rojo/Verde alternativamente	Anaranjado	Rojo intermitente	*	*	Alimentación principal
3	Se detiene el Fan (Optical Unit)	No enciende	Detección de fallas	Rojo/Verde alternativamente	Rojo	Rojo intermitente 3	*	*	Alimentación principal
4	Se detiene el Fan (Agotamiento)	No enciende	Detección de fallas	Rojo/Verde alternativamente	Rojo	Rojo intermitente 2	*	*	Alimentación principal
5	Se detiene el Fan (Toma)	No enciende	Detección de fallas	Rojo/Verde alternativamente	Rojo	Rojo intermitente	*	*	Alimentación principal
6	Se detiene el Fan (Alimentación)	No enciende	Detección de fallas	Rojo/Verde alternativamente	Rojo	Rojo intermitente 4	*	*	Alimentación principal
7	LBOX abierta	No enciende	Prevención del peligro	Rojo/Verde alternativamente	–	–	*	*	Automático
8	FBOX abierta	No enciende	Prevencion de toma de polvo	Rojo/Verde alternativamente	–	–	*	*	Automático
9	Resistencia térmica desconectada (Agotamiento)	No enciende	Detección de fallas	Rojo/Verde alternativamente	–	Rojo intermitente	*	*	Automático
10	Resistencia térmica desconectada (Lámpara)	No enciende	Detección de fallas	Rojo/Verde alternativamente	–	Rojo intermitente 2	*	*	Automático
11	Error de comunicación entre los ordenadores	No enciende	Detección de fallas	Rojo/Verde alternativamente	Anaranjado	Rojo	*	*	Automático
12	Falla del bus IIC (EEPROM)	No enciende	Detección de fallas	Rojo/Verde alternativamente	Verde	Rojo intermitente 2	*	*	Automático
13	Falla del bus IIC (Decodificador)	Visualización inferior de la entrada de VÍDEO	Detección de fallas	Rojo/Verde alternativamente	Verde	Rojo intermitente	*	*	Automático

– : LED apagado
* : No requiere confirmación
Anaranjado : Luces roja y verde
Rojo intermitente N : Se repite el ciclo en el que el rojo destella n veces y se apaga durante un lapso fijo.

ESPAÑOL

Lista de indicación de errores del LED

Orden de preferencia	Falla	Síntoma	Objetivo	Indicación del LED					Puesta a cero
				POWER	LAMP	TEMP	CARD1	CARD2	
14	Sensor de temperatura (Lámpara)	No enciende	Aumento de la temperatura	Rojo	–	Rojo intermitente 2	*	*	Automático
15	Sensor de temperatura (Toma)	No enciende	Aumento de la temperatura	Rojo	–	Rojo intermitente	*	*	Automático
16	Sensor de temperatura (PCB)	No enciende	Aumento de la temperatura	Rojo	–	Rojo intermitente 3	*	*	Automático
17	Vida útil de la lámpara (1000-1300 horas)	indicación de advertencia sólo mediante el LED	Indicación de advertencia del LED Indicación durante la pausa	Rojo	Rojo intermitente	–	*	*	Manual
			Indicación de advertencia del LED Indicación durante la pausa	Verde	Rojo/Verde alternativa-mente	–	*	*	Manual
	Vida útil de la lámpara (1300 horas o más)	No enciende	Vida útil de la lámpara	Rojo	Rojo	–	*	*	Manual
18	No se enciende la luz	No enciende durante 1 minuto	Protección de la lámpara	Rojo	Verde intermitente	–	*	*	Automático
19	Durante 1 minuto luego del encendido	No apagado durante 1 minuto	Protección de la lámpara	Verde	Verde intermitente	–	*	*	Automático
20	Durante 1 minuto luego del apagado	No enciende durante 1 minuto	Protección de la lámpara	Rojo	Verde intermitente	–	*	*	Automático
21	Falla del bus IIC (HIC)	Visualización inferior de todas las entradas	Detección de falla	*	*	*	Verde intermitente	Verde intermitente	Automático
22	Falla del bus IIC (EEPROM)	No enciende	Detección de falla	*	*	*	Verde intermitente 2	Verde intermitente 2	Automático

– : LED apagado
* : No requiere confirmación
Anaranjado : Luces roja y verde
Rojo intermitente N : Se repite el ciclo en el que el rojo destella n veces y se apaga durante un lapso fijo.

ESPAÑOL

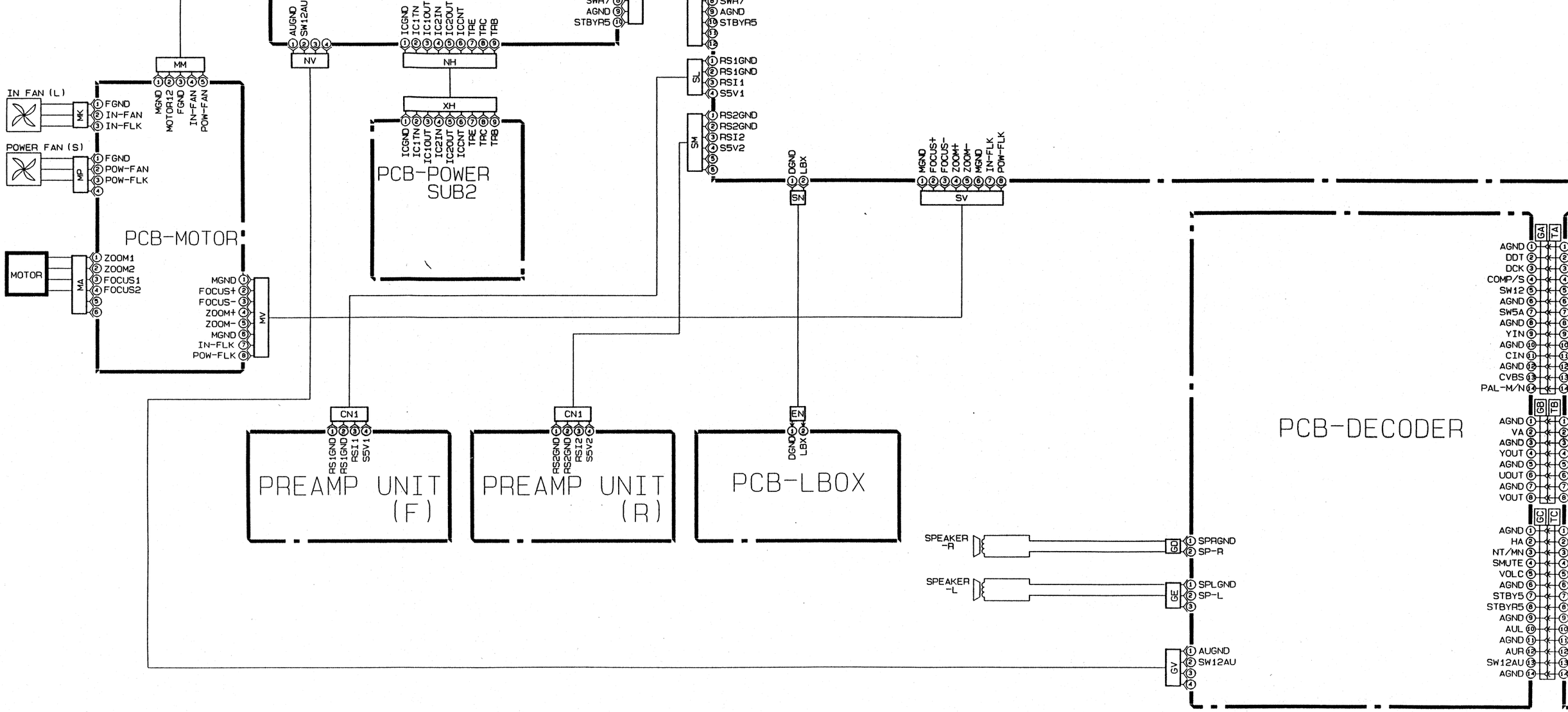

LVP-X200E CONTENTS

BLOCK DIAGRAM	①	DECODER	⑪
TERMINAL	②	PCCARD (1/2)	⑫
DRIVE (1/2)-MAIN (1/8)	③	PCCARD (2/2)	⑬
DRIVE (2/2)-MAIN (2/8)	④	POWER, POWER SUB	⑭
AD-MAIN (3/8)	⑤	MOTOR, POWER SUB2	⑭
ASIC1-MAIN (4/8)	⑥	L BOX, F BOX	⑭
ASIC2-MAIN (5/8)	⑦	PFC, INLET	⑭
ASIC5-MAIN (6/8)	⑧	FILTER	⑭
SUB μ COM-MAIN (7/8)	⑨	LAMP POWER, LP CONT	⑮
PIO-MAIN (8/8)	⑩	OPTION	⑮

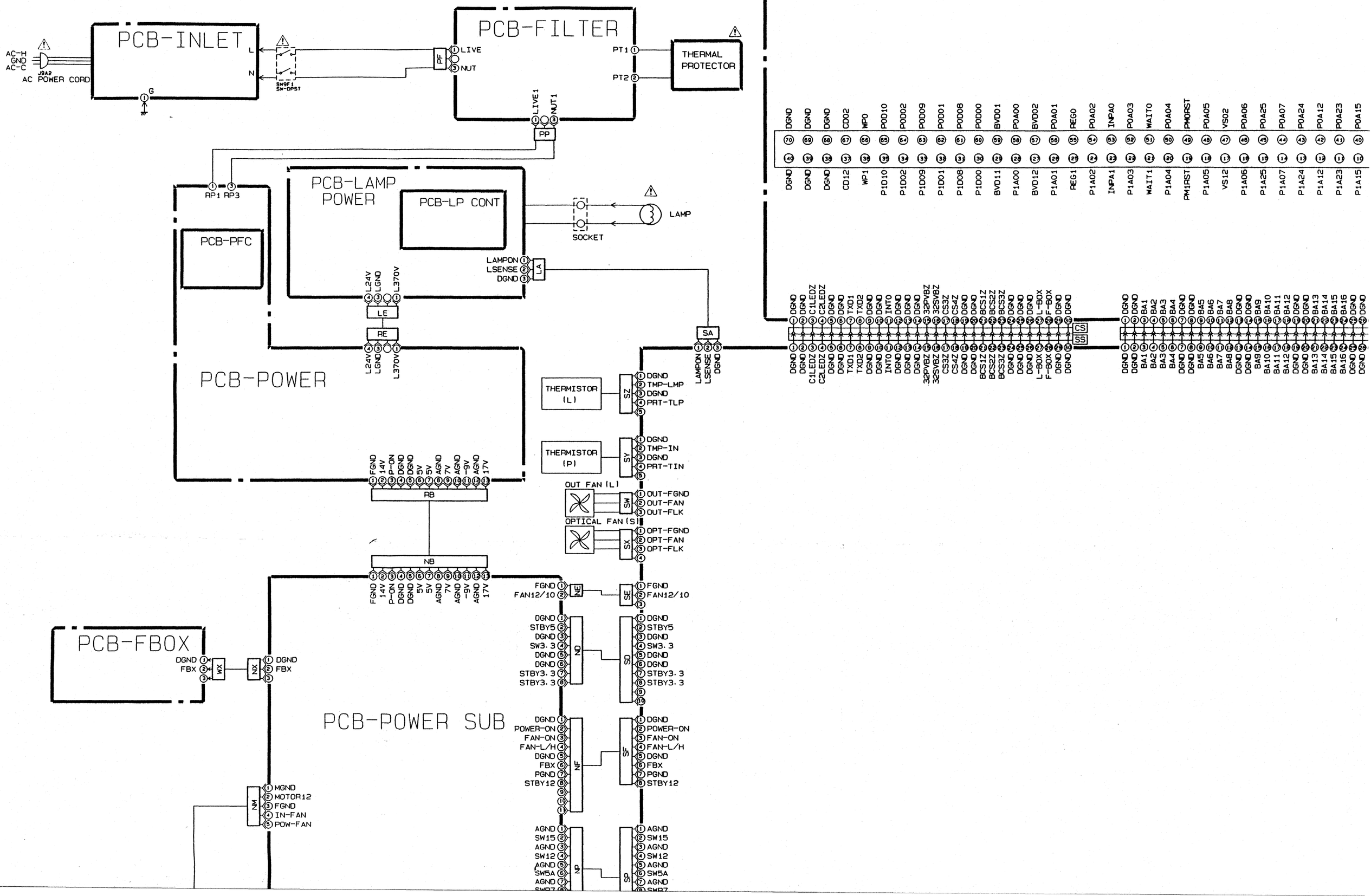
PCB-INLET
AC-H
GND
AC-C
J9A2
AC POWER CORD
L
N
G
SW9F1
SW-DPST
PCB-FILTER
PF
LIVE
NUT
PT1
PT2
THERMAL PROTECTOR
LIVE1
NUT1
PP
RP1 RP3
PCB-LAMP POWER
PCB-LP CONT
LAMP
SOCKET
PCB-PFC
LAMPON
LSENSE
DGND
LA
L24V
LGND
L370V
LE
RE
PCB-POWER
SA
THERMISTOR (L)
SZ
TMP-LMP
PRT-TLP
THERMISTOR (P)
SY
TMP-IN
PRT-TIN
OUT FAN (L)
SW
OUT-FGND
OUT-FAN
OUT-FLK
OPTICAL FAN (S)
SX
OPT-FGND
OPT-FAN
OPT-FLK
FGND
14V
P-ON
DGND
5V
AGND
7V
-9V
17V
RB
NB
NE
SE
FAN12/10
ND
SD
STBY5
SW3.3
STBY3.3
NF
SF
POWER-ON
FAN-ON
FAN-L/H
FBX
PGND
STBY12
NP
SP
SW15
SW12
SW5A
PCB-FBOX
WX
NX
NM
MGND
MOTOR12
IN-FAN
POW-FAN
PCB-POWER SUB
CS
SS

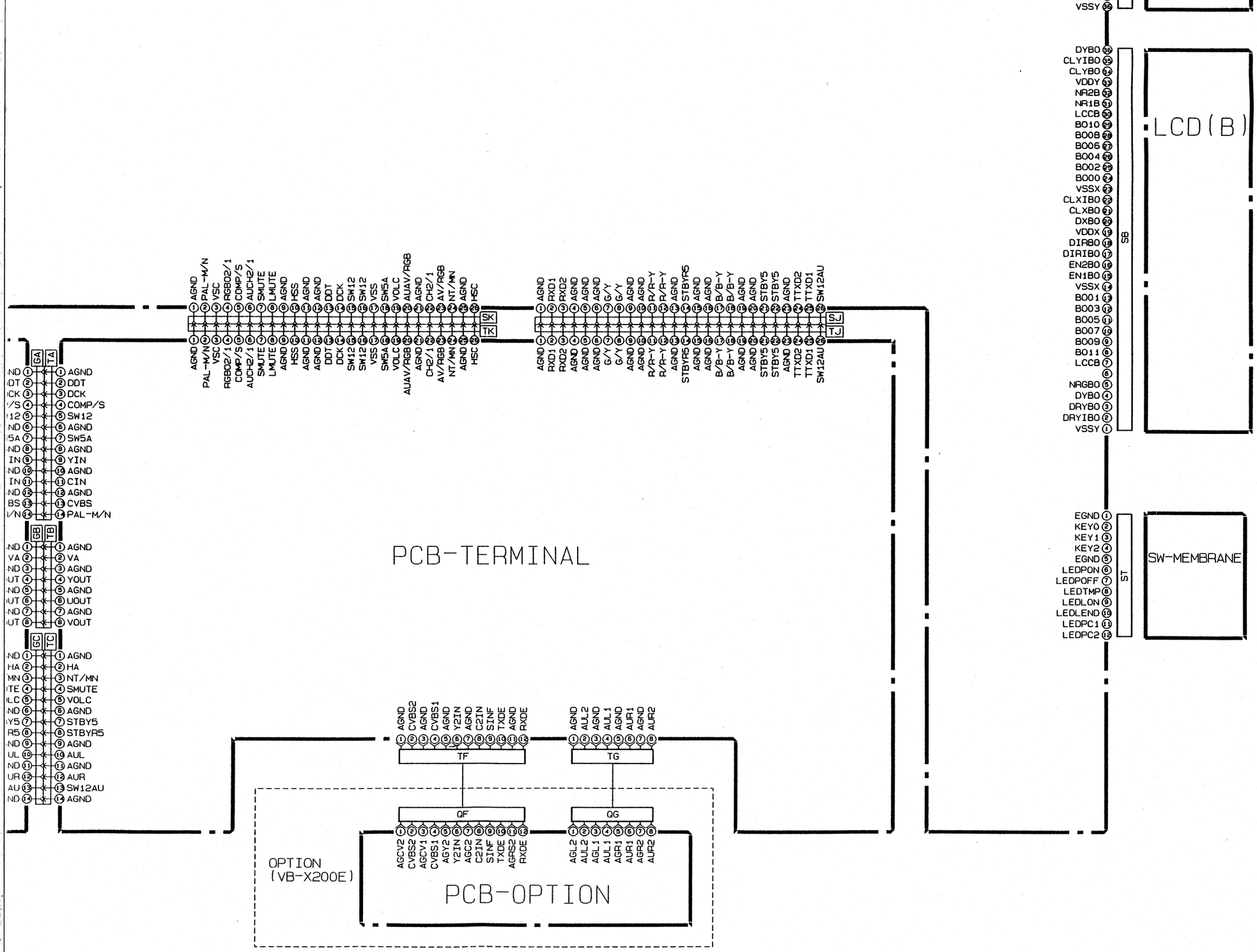

Thermistor

Fusible Resistor

Ceramic filter

SERVICING PRECAUTION

SYMBOLS INDICATE COMPONENTS HAVING SPECIAL CHARACTERISTICS IMPORTANT TO SAFETY AND PERFORMANCE. THERFORE REPLACEMENT OF ANY SAFETY PARTS SHOULD BE IDENTICAL IN VALUE AND CHARACTERISTICS. FOR ACCURACY OF THE REPLACEMENT REFER TO THE PARTS LIST OF SERVICE MANUAL.

DON'T DEGRADE THE SAFETY OF THE RECEIVERS THROUGH IMPROPER SERVICING.

9 10 11 12 13 14 15 16

PCB-PCCARD

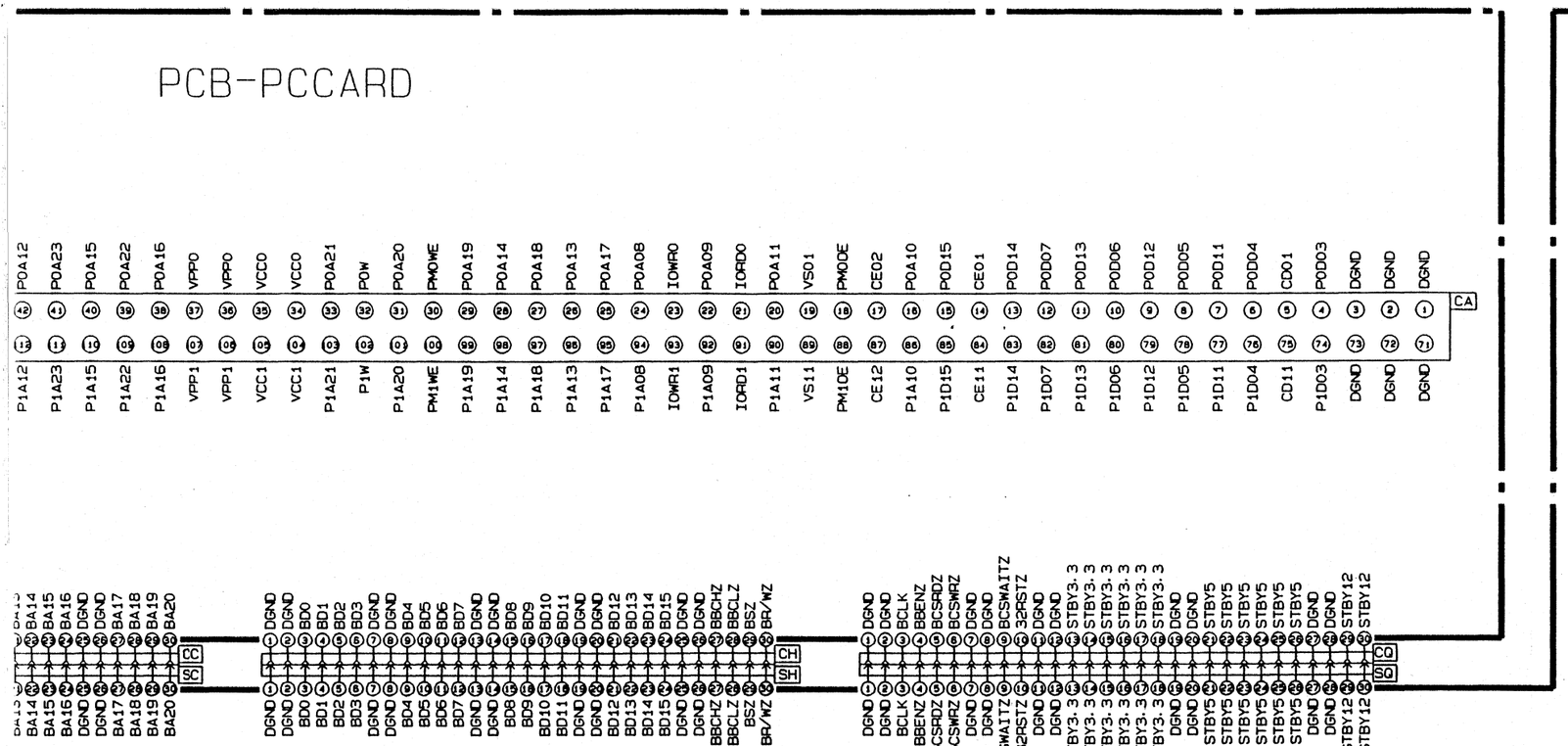

PCB-MAIN

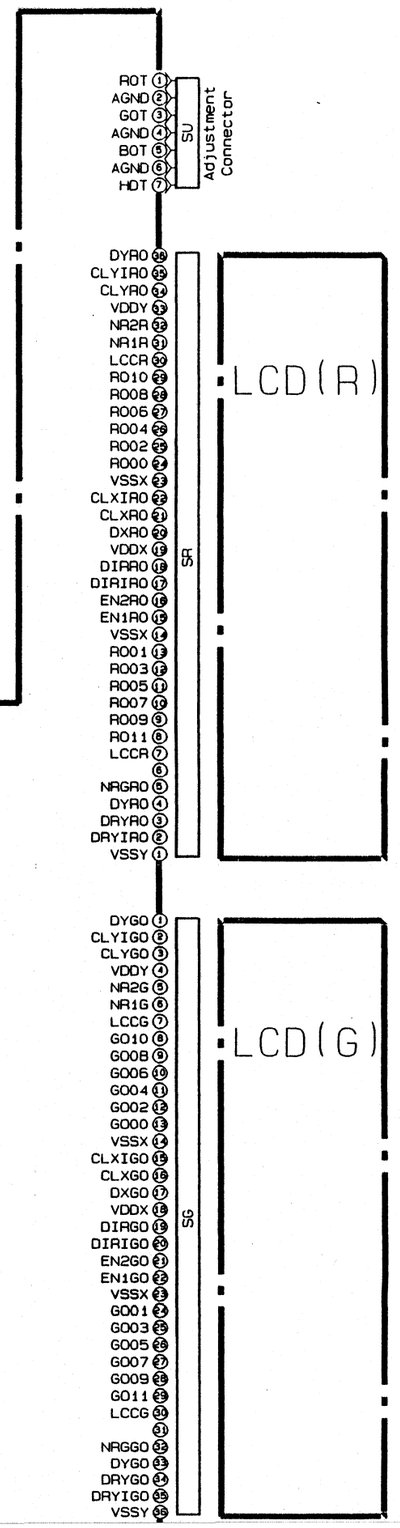

SCHEMATIC DIAGRAM
MODEL : LVP-X200E

• NOTE

1. TP6A, etc. show Test Points.
2. Capacitors

Value	Not indicated	PF, for numbers more than 1 μF, for numbers less than 1	
Dielectric Strength	Not indicated :50V		
Tolerance	Not indicated =±10%	No Tolerance is indicated for electrolytic capacitors and ±20%	
	G=±2%	P=+100%	Q=+30% C=±0.25PF
	J=±5%	−0%	−10% D=±0.5PF
	K=±10%	Z=+80%	T=+200% F=±1PF
	M=±20%	−20%	−0% G=±2PF
Sort	I Parts except for chips	Not indicated : Ceramic capacitor (MF) : Polyester capacitor (PP) : Polypropylene film capacitor (ALM) : Aluminus electrolytic capacitor (TF) : Twin film capacitor (SC) : Semiconductor ceramic capacitor (MP) : Metalized paper (MPP) : Metalized plastic film capacitor (MMF) : Metalized polyester capacitor (MF.PP) : Polyester polypropylence film capacitor (PS) : Styrol capacitor (TAN) or (TANT) : Tantalum capacitor ⊣⊢ : Electrolytic capacitor (BP) or (NP) : Non polarized electrolytic capacitor	
	II Chips	Not indicated : Ceramic capacitor chip ⊣⊢ : Electrolytic capacitor (BP) or (NP) : Non polarized electrolytic capacitor chip	
Characteristic (only ceramic capacitor)	Not indicated : F or B(high dielectric percentage) CH,SL,etc. : Temperature compensating types		

3. Resistors

Value	Not indicated = Ω K = kΩ(1000Ω) M = MΩ(1000kΩ)	
Wattage	Parts except for chips	Not indicated = 1/4W or 1/6W
	Chips	Not indicated = 1/10W
Tolerance	Not indicated =±5% D=±0.5% J=±5% F=±1% K=±10%	
Short	I Parts except for chips	Not indicated : Carbon resistor (S) : Fixed composition resistor (MB) : Metal oxide film resistor(type B) (CE) : Cemented resister (W) : Wire wound resister (M) : Metal film resister (MPC) : Metal plate cement resister (ML) : Metal liner resister
	II Chip	Not indicated : Chip resistor

4. This is a basic schematic diagram. Some sets may be subject to modification according to engineering improvement.

SPECIFIC SYMBOL

Zener Diode	Crystal unit
Varicap	Air Gap
Posistor	Part(resistor) attached on the copper-foil side of PCB
Thermistor	

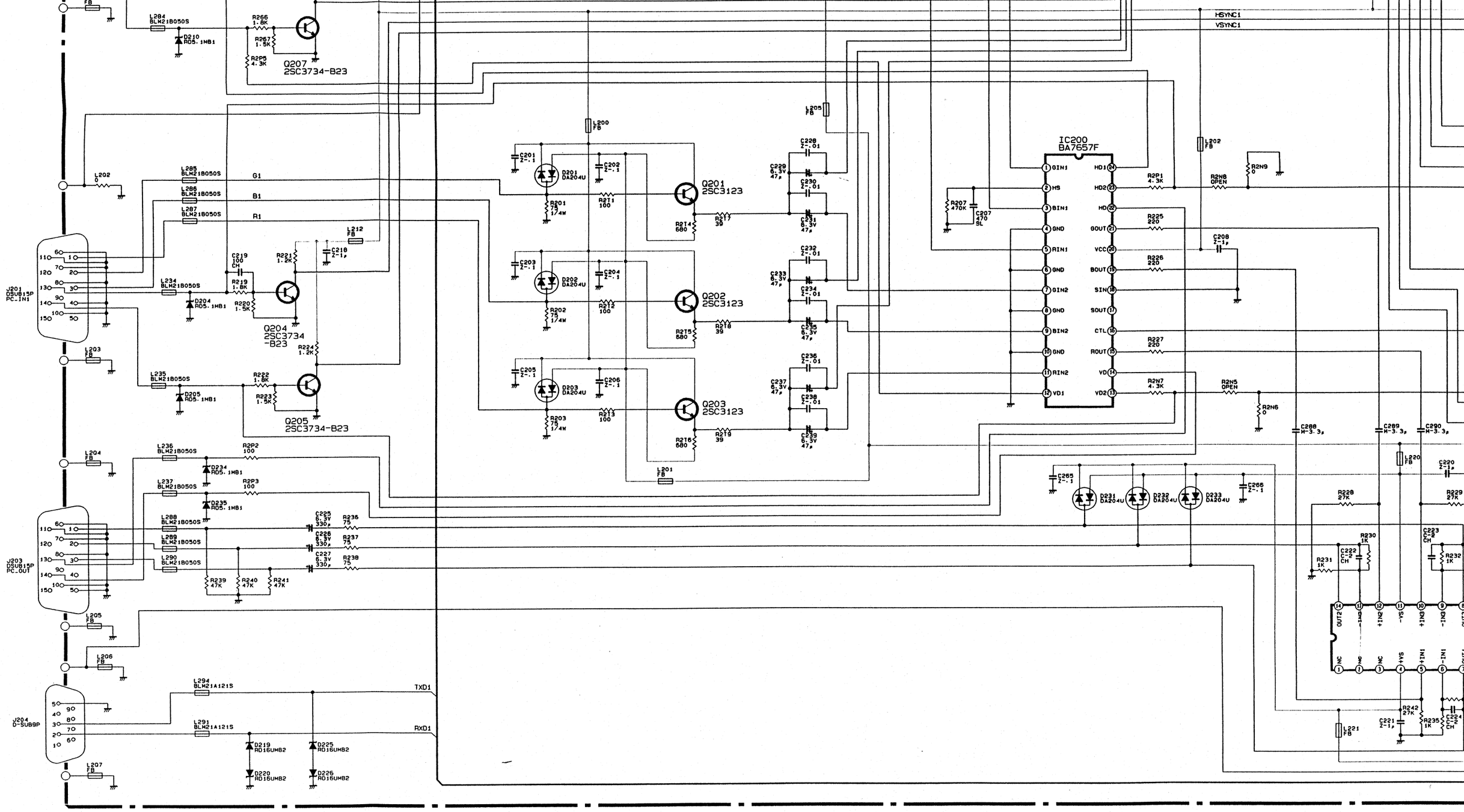

FB IS BLM11A601S

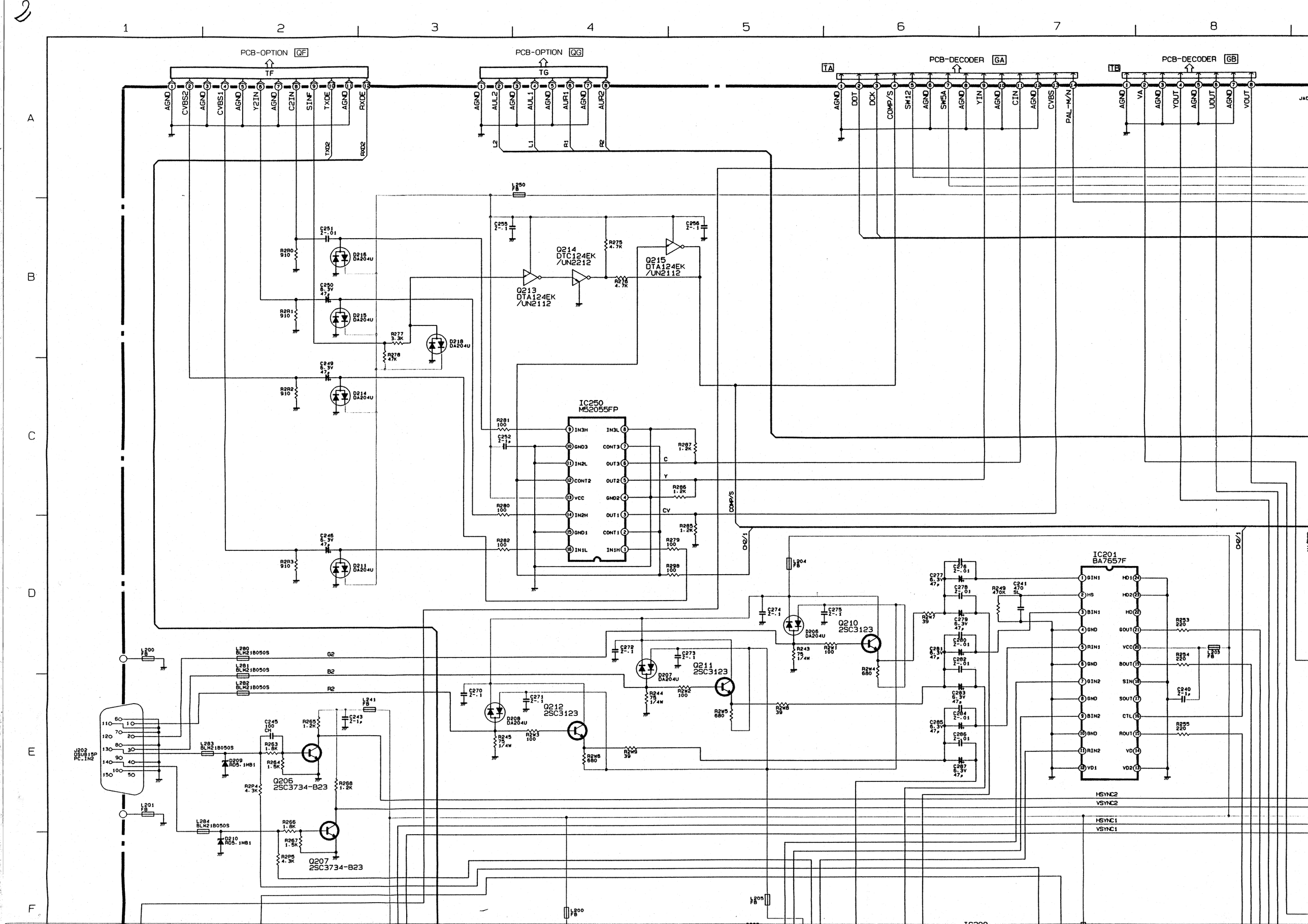
PCB-OPTION QF
TF
AGND CVBS2 AGND CVBS1 AGND Y2IN AGND C2IN SINF TXDE AGND RXDE
TXD2
RXD2
PCB-OPTION QG
TG
AGND AUL2 AGND AUL1 AGND AUR1 AGND AUR2
L2 L1 R1 R2
TA
PCB-DECODER GA
AGND DDT DCK COMP/S SW12 AGND SW6A AGND YIN AGND CIN AGND CVBS PAL-M/N
TB
PCB-DECODER GB
AGND VA AGND YOUT AGND UOUT AGND VOUT
L250 FB
C255 Z-.1
C256 Z-.1
R275 4.7K
Q214 DTC124EK /UN2212
Q215 DTA124EK /UN2112
R278 4.7K
Q213 DTA124EK /UN2112
C251 Z-.01
R280 910
D216 DA204U
C250 6.3V 47
R281 910
D215 DA204U
R277 3.3K
R278 47K
D218 DA204U
C249 6.3V 47
R282 910
D214 DA204U
IC250 M52055FP
IN3H IN3L GND3 CONT3 IN2L OUT3 CONT2 OUT2 VCC GND2 IN2H OUT1 GND1 CONT1 IN1H IN1L
R281 100
C252 Z-.1
R280 100
R282 100
R287 1.2K
R286 1.2K
R285 1.2K
R279 100
R298 100
C
Y
CV
C246 6.3V 47
R283 910
D211 DA204U
COMP/S
C/Y
L204 FB
C274 Z-.1
C275 Z-.1
D206 DA204U
Q210 2SC3123
R243 75 1/4W
R2W1 100
R2W7 39
R2W4 680
C272 Z-.1
C273 Z-.1
D207 DA204U
Q211 2SC3123
R244 75 1/4W
R2W2 100
R2W5 680
R2W6 39
C270 Z-.1
C271 Z-.1
D208 DA204U
Q212 2SC3123
R245 75 1/4W
R2W3 100
R2W6 680
R2W9 39
IC201 BA7657F
C276 Z-.01
C277 6.3V 47
C278 Z-.01
C279 6.3V 47
C280 Z-.01
C281 6.3V 47
C282 Z-.01
C283 6.3V 47
C284 Z-.01
C285 6.3V 47
C286 Z-.01
C287 6.3V 47
R249 470K
C241 470 SL
GIN1 HS BIN1 GND RIN1 GND GIN2 GND BIN2 GND RIN2 VD1 HD1 HD2 HD GOUT VCC BOUT SIN SOUT CTL ROUT VD HD2
R253 220
R254 220
R255 220
C240 Z-1
L203 FB
HSYNC2
VSYNC2
HSYNC1
VSYNC1
L202 DSUB15P PC_IN2
L200 FB
L201 FB
L280 BLM21B050S G2
L281 BLM21B050S B2
L282 BLM21B050S R2
L241 FB
C243 Z-1
C245 100 CH
R265 1.2K
L283 BLM21B050S
R263 1.8K
R264 1.5K
D209 RD5.1MB1
R2P4 4.3K
R268 1.2K
Q206 2SC3734-B23
L284 BLM21B050S
R266 1.8K
R267 1.5K
D210 RD5.1MB1
R2P5 4.3K
Q207 2SC3734-B23
L205 FB
L200 FB

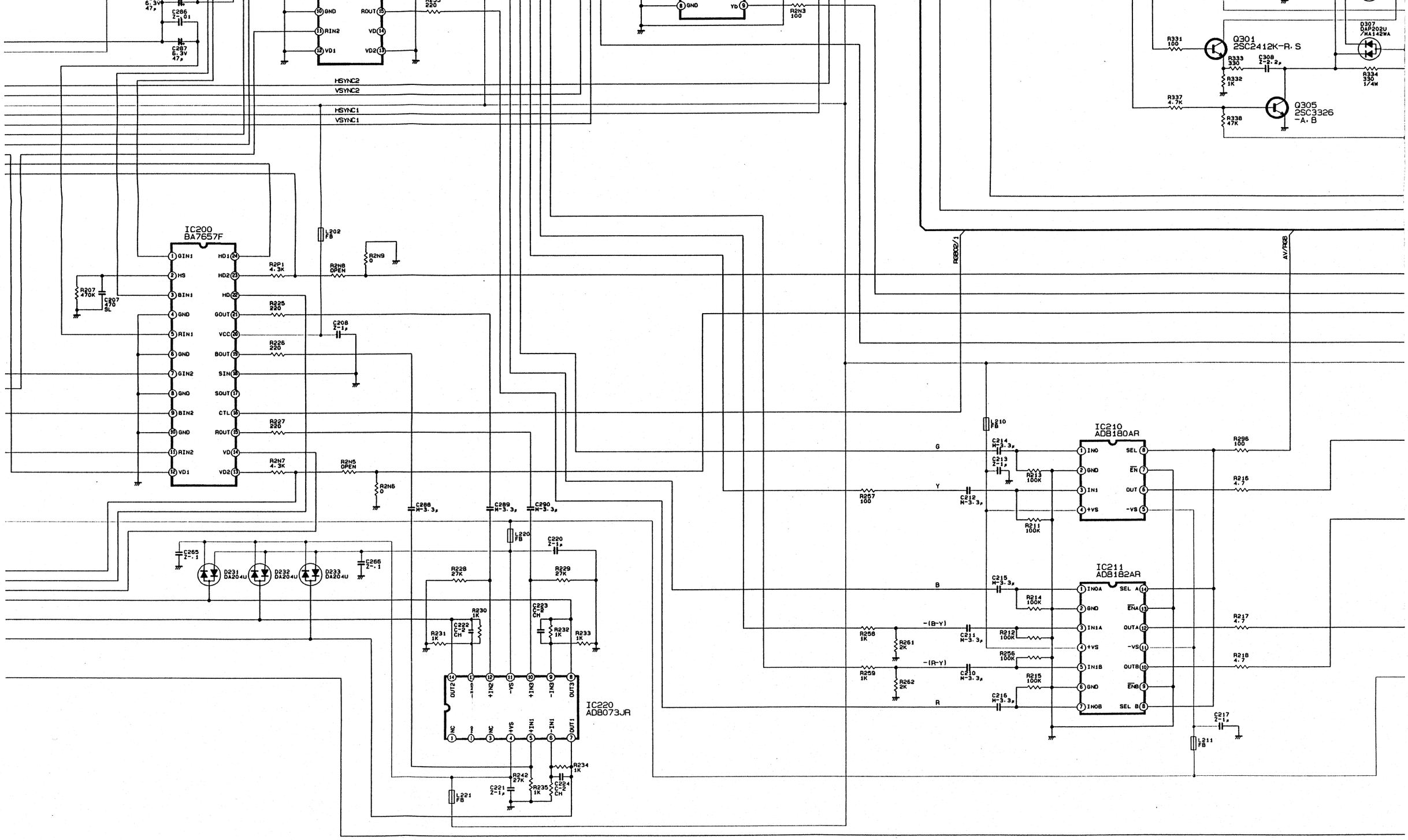

FB IS BLM11A601S

6 7 8 9 10 11 12 13

PCB-TEF

PCB-DECODER GA

TA

AGND DDT DCK COMP/S SW12 AGND SW5A AGND YIN AGND CIN AGND CVBS PAL-M/N

PCB-DECODER GB

TB

AGND VA AGND YOUT AGND UOUT AGND VOUT

J208 JACK-HEADPHONE

C311 470 SL

C312 470 SL

L317 BLM11B141S

L318 BLM11B141S

L320 0

R1 R300 0 C300 2-2.2μ R302 100K R303 100K

D300 DAP202U /MA142WA

D301 DAN202U /MA142WK

L1 R304 0 C301 2-2.2μ R306 100K R307 100K

L300 FB

C308 2-1μ

L2 R2 R308 0 C302 2-2.2μ R310 100K R311 100K

D302 DAP202U /MA142WA

D303 DAN202U /MA142WK

L2 R312 0 C303 2-2.2μ R314 100K R315 100K

PCR R316 2.2K C304 2-2.2μ R317 330K R318 100K R319 100K

D304 DAP202U /MA142WA

D305 DAN202U /MA142WK

PCL R320 2.2K C305 2-2.2μ R321 330K R322 100K R323 100K

ALCH2/1 ALAV/RGB

VCC X2 X1 X X0 X3 A B

YD Y2 Y Y3 Y1 EN VEE GND

IC300 74VHC4052M

AUR AUL

Q300 2SC2412K-R.S

R327 100 R329 330 C307 2-2.2μ R328 1K R330 330 1/4W

D306 DAN202U /MA142WK

Q304 2SC3326 -A.B

R335 4.7K R335 47K

Q301 2SC2412K-R.S

R331 100 R333 330 C308 2-2.2μ R332 1K R334 330 1/4W

D307 DAP202U /MA142WA

R337 4.7K

Q305

R326 4.7K R325 4.7K

Q303 2SA1037K -R.S

Q302 DTC124EK /UN2212

IC201 BA7657F

C276 2-.01 C277 6.3V 47μ C278 2-.01 C279 6.3V 47μ C280 2-.01 C281 6.3V 47μ C282 2-.01 C283 6.3V 47μ C284 2-.01 C285 6.3V 47μ C286 2-.01 C287 6.3V 47μ

R249 470K C241 470 SL

GIN1 HS BIN1 GND RIN1 GND GIN2 GND BIN2 GND RIN2 VD1

HD1 HD2 HD GOUT VCC BOUT SIN SOUT CTL ROUT VD VD2

R253 220 R254 220 L201 FB C240 2-1μ R255 220

C275 2-.1 Q210 2SC3123 D206 DA204U R2N1 100 R2N4 680 R2N7 3B

HSYNC2 VSYNC2 CH2/1 AV/RGB

IC260 74VHC153M

OEa S1 D3a D2a D1a D0a Ya GND

VCC OEb S0 D3b D2b D1b D0b Yb

L260 FB C254 2-1μ R2N4 100 R2N3 100

CH2/1

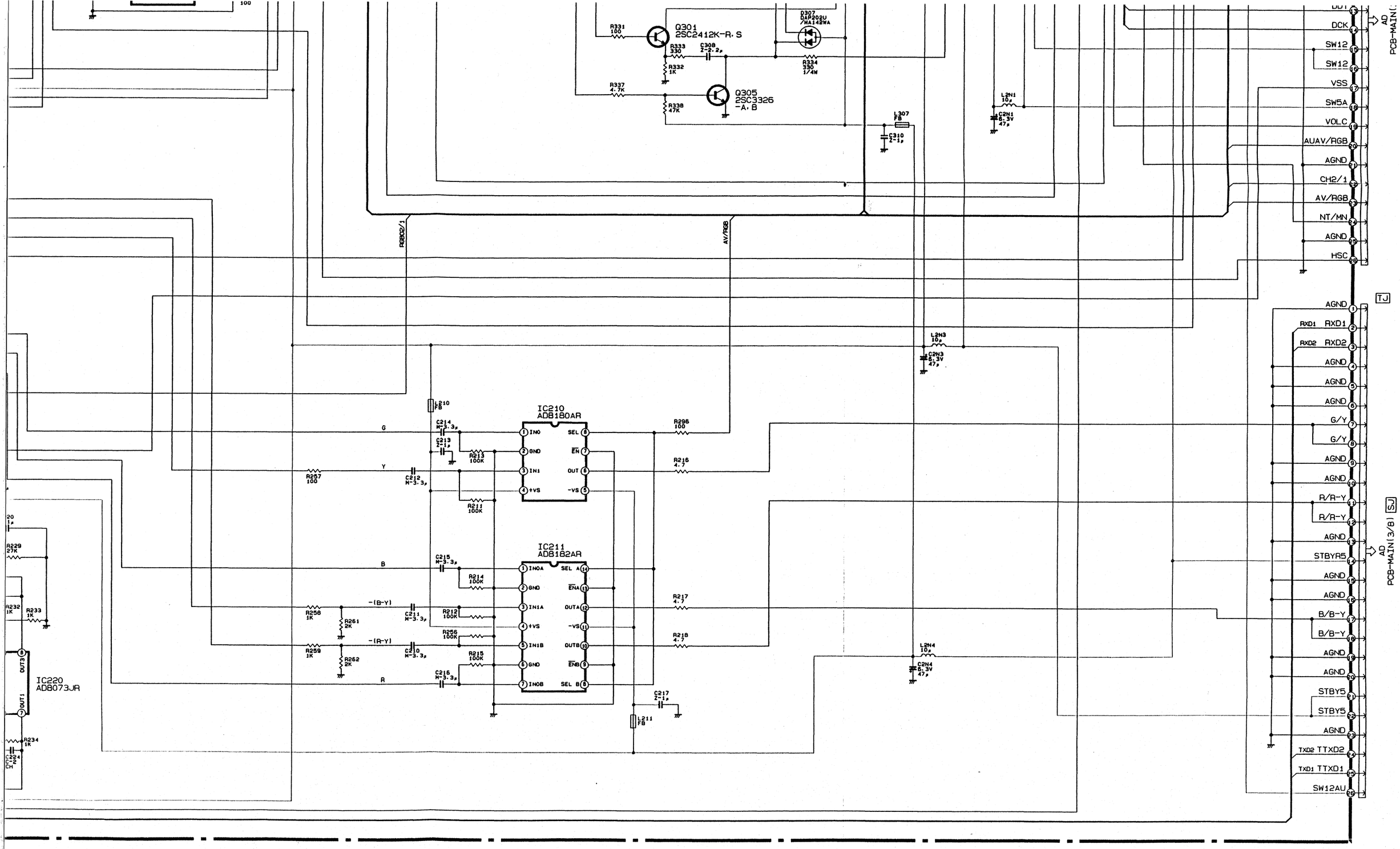

LVP-X200E CONTENTS

BLOCK DIAGRAM	①	DECODER	⑪
TERMINAL	②	PCCARD (1/2)	⑫
DRIVE (1/2)-MAIN (1/8)	③	PCCARD (2/2)	⑬
DRIVE (2/2)-MAIN (2/8)	④	POWER, POWER SUB	⑭
AD-MAIN (3/8)	⑤	MOTOR, POWER SUB2	⑭
ASIC1-MAIN (4/8)	⑥	L BOX, F BOX	⑭
ASIC2-MAIN (5/8)	⑦	PFC, INLET	⑭
ASIC5-MAIN (6/8)	⑧	FILTER	⑭
SUB μ COM-MAIN (7/8)	⑨	LAMP POWER, LP CONT	⑮
PIO-MAIN (8/8)	⑩	OPTION	⑮

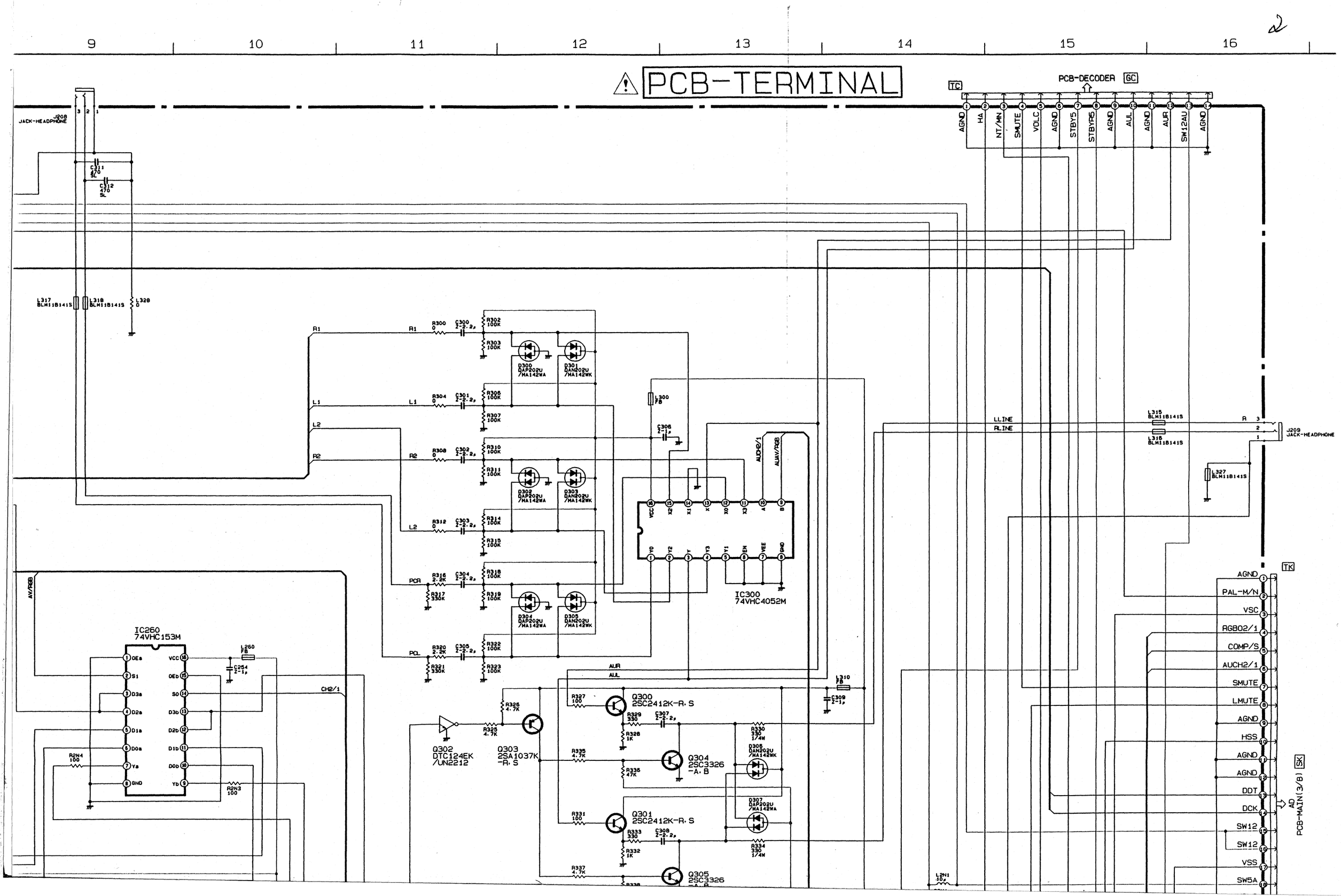

PCB-TERMINAL
PCB-DECODER
GC
TC
AGND
HA
NT/MN
SMUTE
VOLC
STBY5
STBYR5
AUL
AUR
SW12AU
J208
JACK-HEADPHONE
J209
JACK-HEADPHONE
IC260
74VHC153M
IC300
74VHC4052M
Q300
2SC2412K-R.S
Q301
2SC2412K-R.S
Q302
DTC124EK
/UN2212
Q303
2SA1037K
-R.S
Q304
2SC3326
-A.B
Q305
2SC3326
LLINE
RLINE
AUCH2/1
AUAV/RGB
AV/RGB
CH2/1
AUR
AUL
TK
AGND
PAL-M/N
VSC
RGB02/1
COMP/S
AUCH2/1
SMUTE
LMUTE
HSS
DDT
DCK
SW12
VSS
SW5A
AD
PCB-MAIN(3/8)
SK

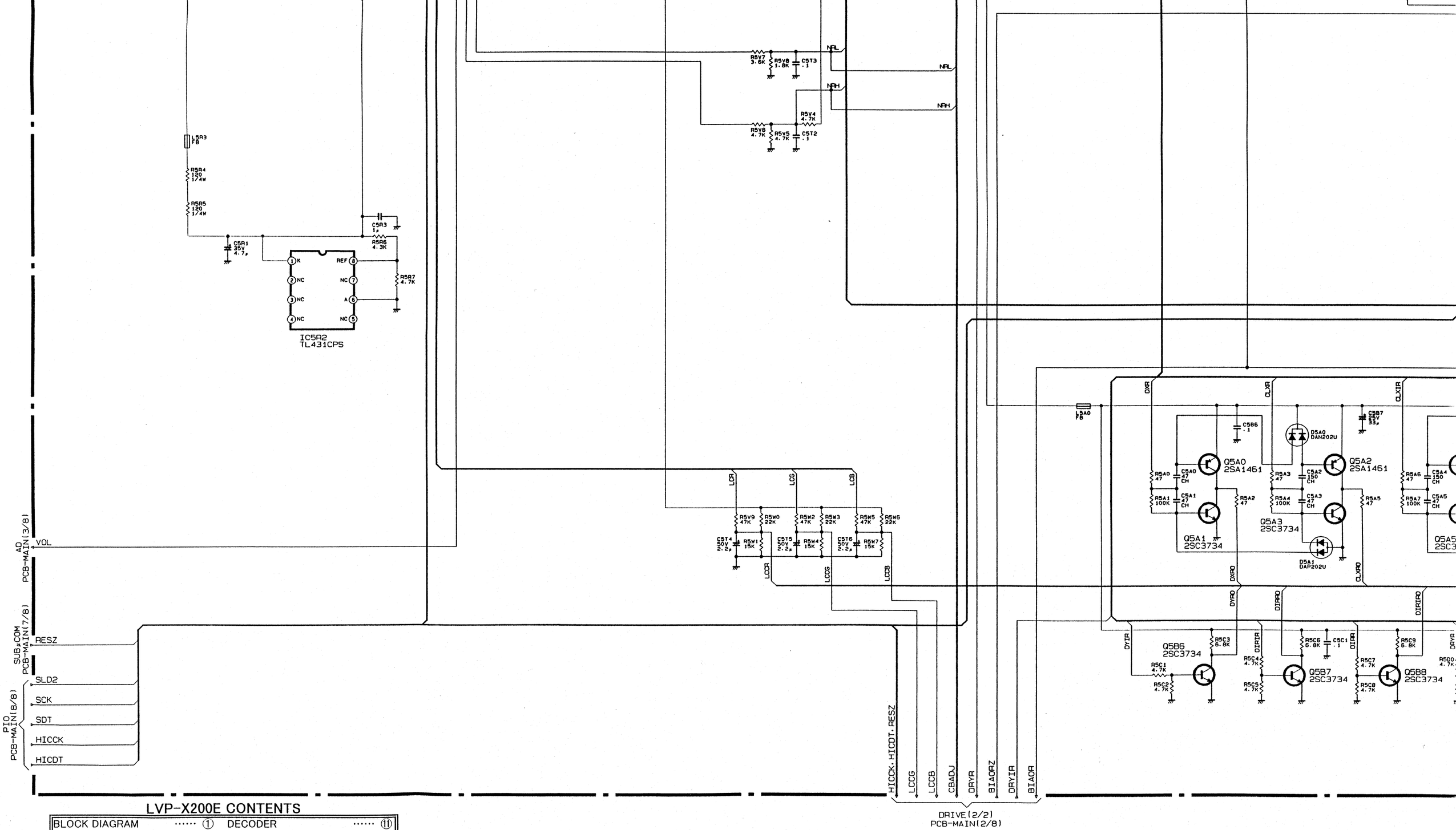

LVP-X200E CONTENTS

BLOCK DIAGRAM	①	DECODER	⑪
TERMINAL	②	PCCARD (1/2)	⑫
DRIVE (1/2)-MAIN (1/8)	③	PCCARD (2/2)	⑬
DRIVE (2/2)-MAIN (2/8)	④	POWER, POWER SUB	⑭
AD-MAIN (3/8)	⑤	MOTOR, POWER SUB2	⑭
ASIC1-MAIN (4/8)	⑥	L BOX, F BOX	⑭
ASIC2-MAIN (5/8)	⑦	PFC, INLET	⑭
ASIC5-MAIN (6/8)	⑧	FILTER	⑭
SUB μ COM-MAIN (7/8)	⑨	LAMP POWER, LP CONT	⑮
PIO-MAIN (8/8)	⑩	OPTION	⑮

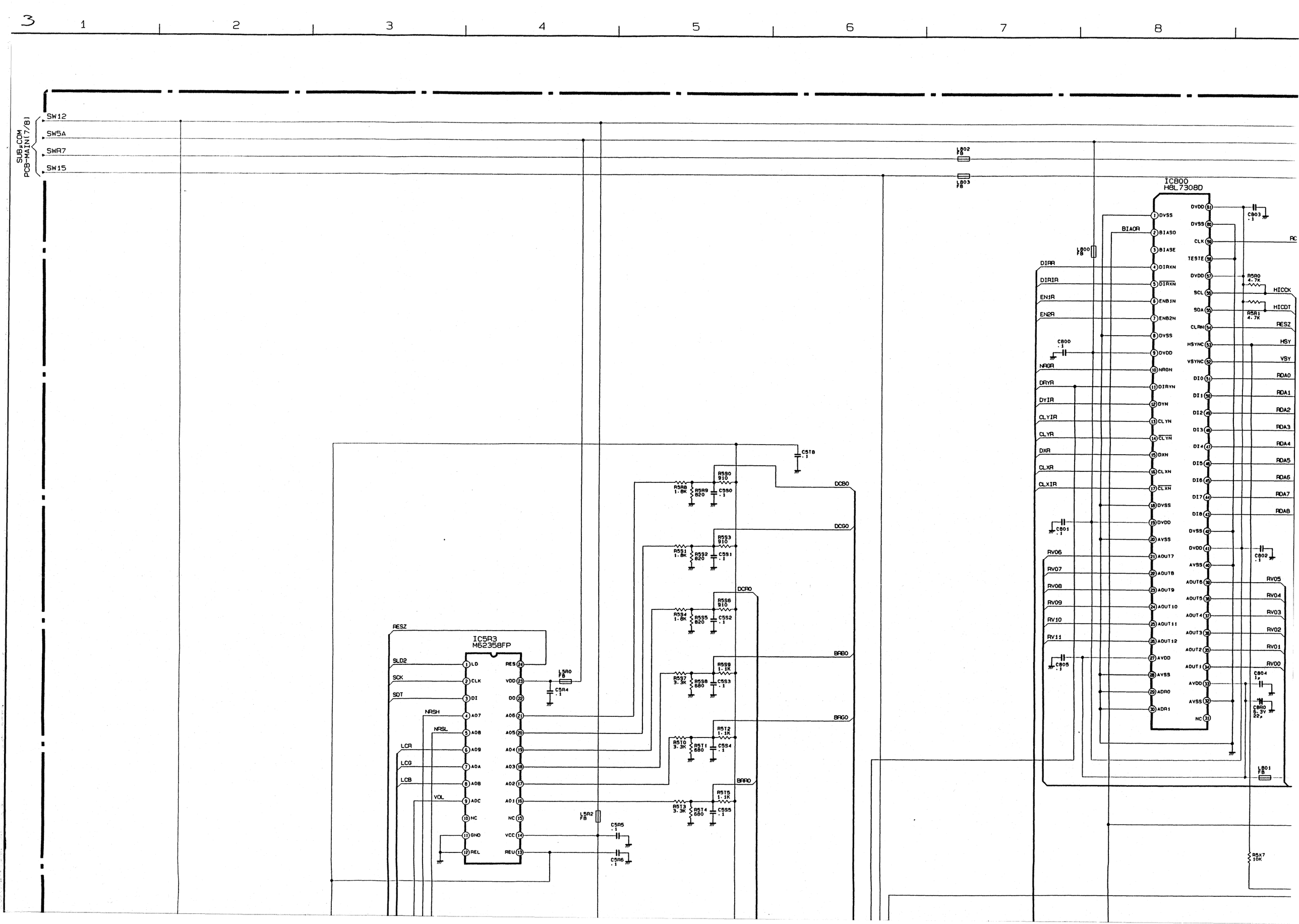

3
1
2
3
4
5
6
7
8
SUBμCOM PCB-MAIN(7/8)
SW12
SW5A
SWR7
SW15
IC800
H8L7308D
IC5R3
M62358FP
DIRR
DIRIR
EN1R
EN2R
NRGR
DRYR
DYIR
CLYIR
CLYR
DXR
CLXR
CLXIR
RV06
RV07
RV08
RV09
RV10
RV11
BIAOR
HICCK
HICDT
RESZ
HSY
VSY
RDA0
RDA1
RDA2
RDA3
RDA4
RDA5
RDA6
RDA7
RDA8
RV05
RV04
RV03
RV02
RV01
RV00
DCB0
DCG0
DCR0
BRB0
BRG0
BRR0
RESZ
SLD2
SCK
SDT
NRSH
NRSL
LCR
LCG
LCB
VOL

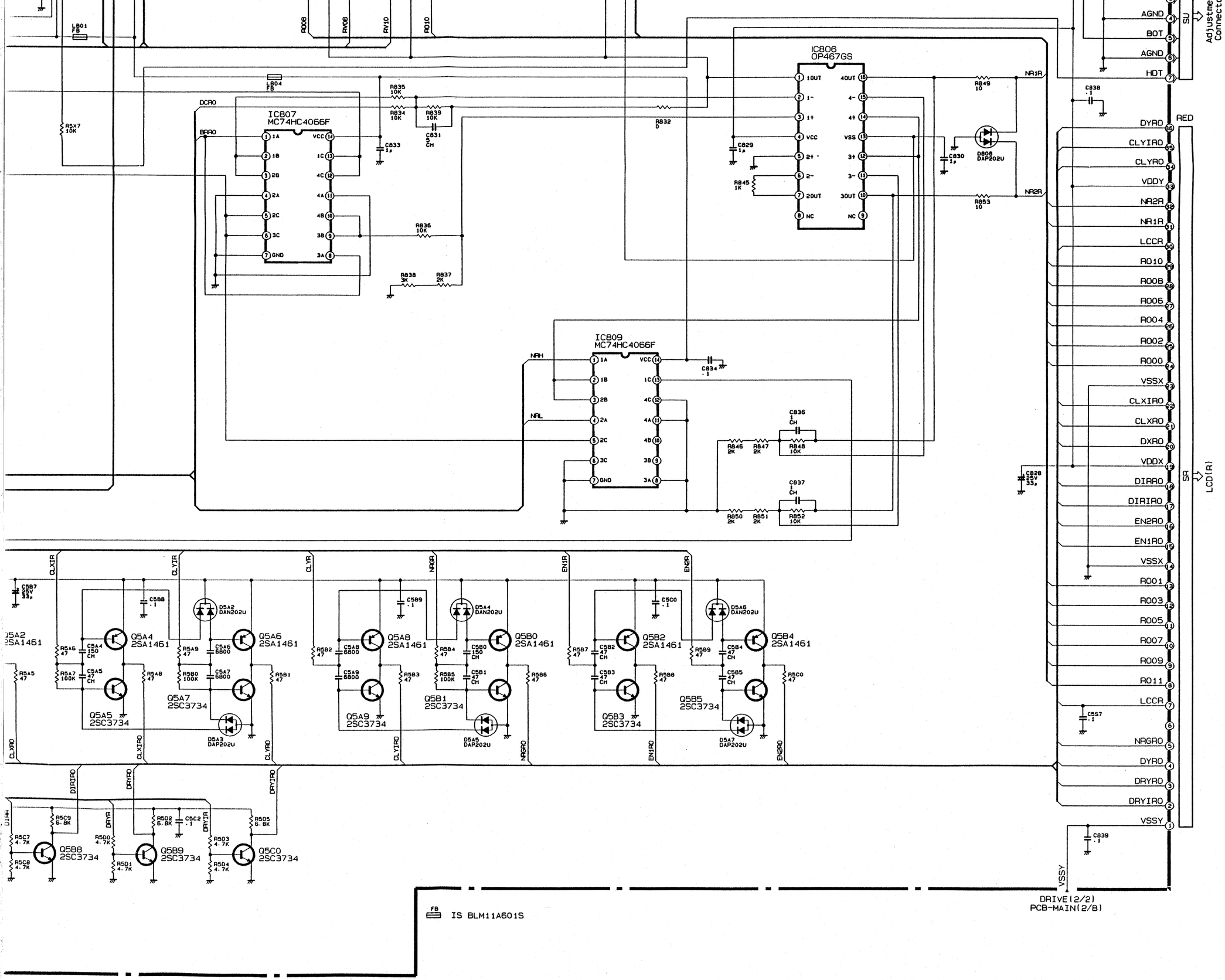

IC806
OP467GS
IC807
MC74HC4066F
IC809
MC74HC4066F
Q5A2
2SA1461
Q5A4
2SA1461
Q5A5
2SC3734
Q5A6
2SA1461
Q5A7
2SC3734
Q5A8
2SA1461
Q5A9
2SC3734
Q5B0
2SA1461
Q5B1
2SC3734
Q5B2
2SA1461
Q5B3
2SC3734
Q5B4
2SA1461
Q5B5
2SC3734
Q5B8
2SC3734
Q5B9
2SC3734
Q5C0
2SC3734
D5A2
DAN202U
D5A3
DAP202U
D5A4
DAN202U
D5A5
DAP202U
D5A6
DAN202U
D5A7
DAP202U
D806
DAP202U
AGND
BOT
AGND
HDT
SU
Adjustme
Connecto
RED
DYRO
CLYIRO
CLYRO
VDDY
NR2R
NR1R
LCCR
RO10
RO08
RO06
RO04
RO02
RO00
VSSX
CLXIRO
CLXRO
DXRO
VDDX
DIRRO
DIRIRO
EN2RO
EN1RO
VSSX
RO01
RO03
RO05
RO07
RO09
RO11
LCCR
NRGRO
DYRO
DRYRO
DRYIRO
VSSY
SR
LCD(R)
VSSY
DRIVE(2/2)
PCB-MAIN(2/8)
IS BLM11A601S

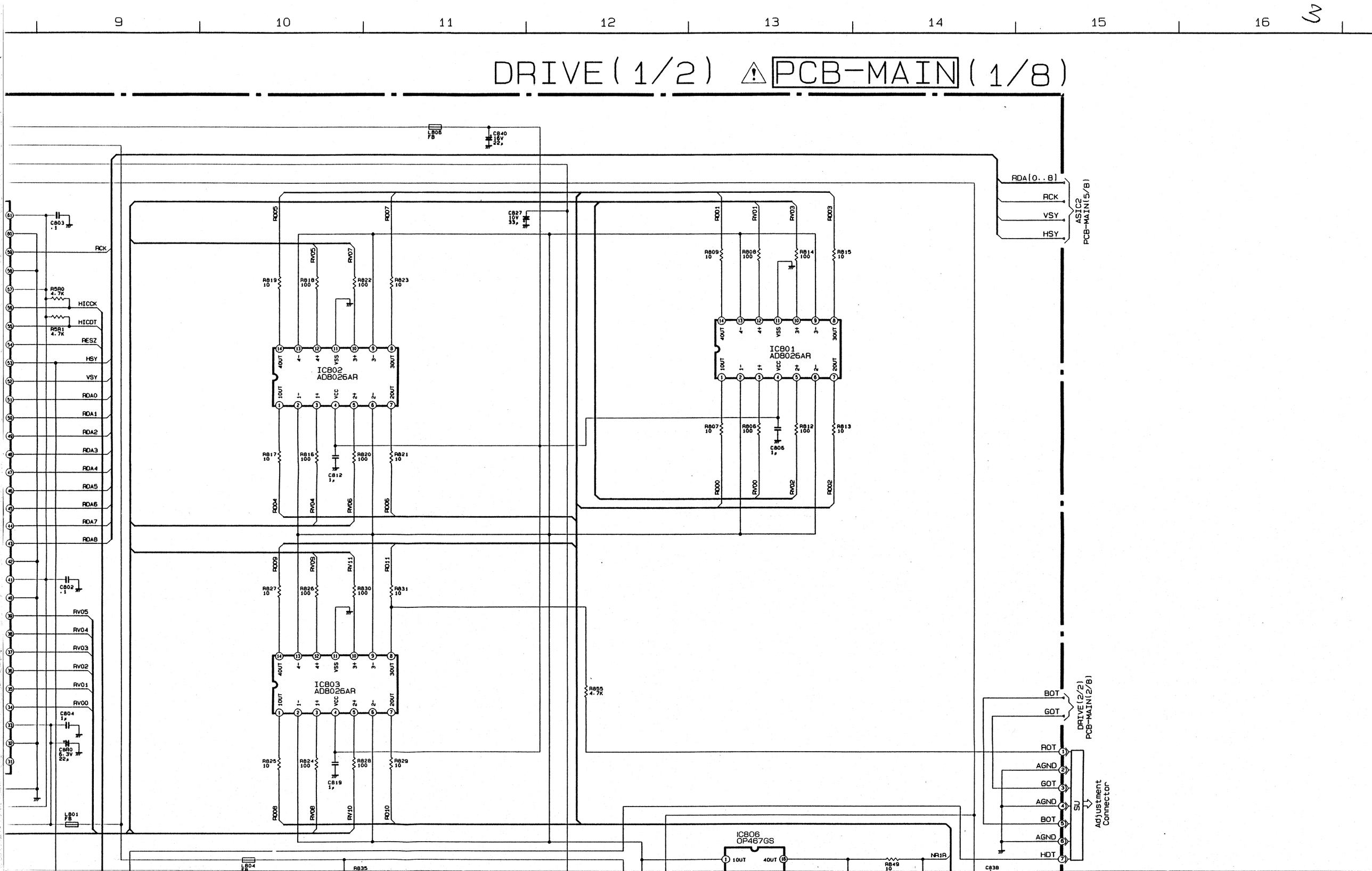

9
10
11
12
13
14
15
16
3
DRIVE(1/2) ⚠ PCB-MAIN (1/8)
RDA[0..8]
RCK
VSY
HSY
ASIC2
PCB-MAIN(5/8)
IC802
AD8026AR
IC801
AD8026AR
IC803
AD8026AR
IC806
OP467GS
BOT
GOT
ROT
AGND
GOT
AGND
BOT
AGND
HDT
SU
Adjustment
Connector
DRIVE(2/2)
PCB-MAIN(2/8)
RCK
HICCK
HICDT
RESZ
HSY
VSY
RDA0
RDA1
RDA2
RDA3
RDA4
RDA5
RDA6
RDA7
RDA8
RV05
RV04
RV03
RV02
RV01
RV00

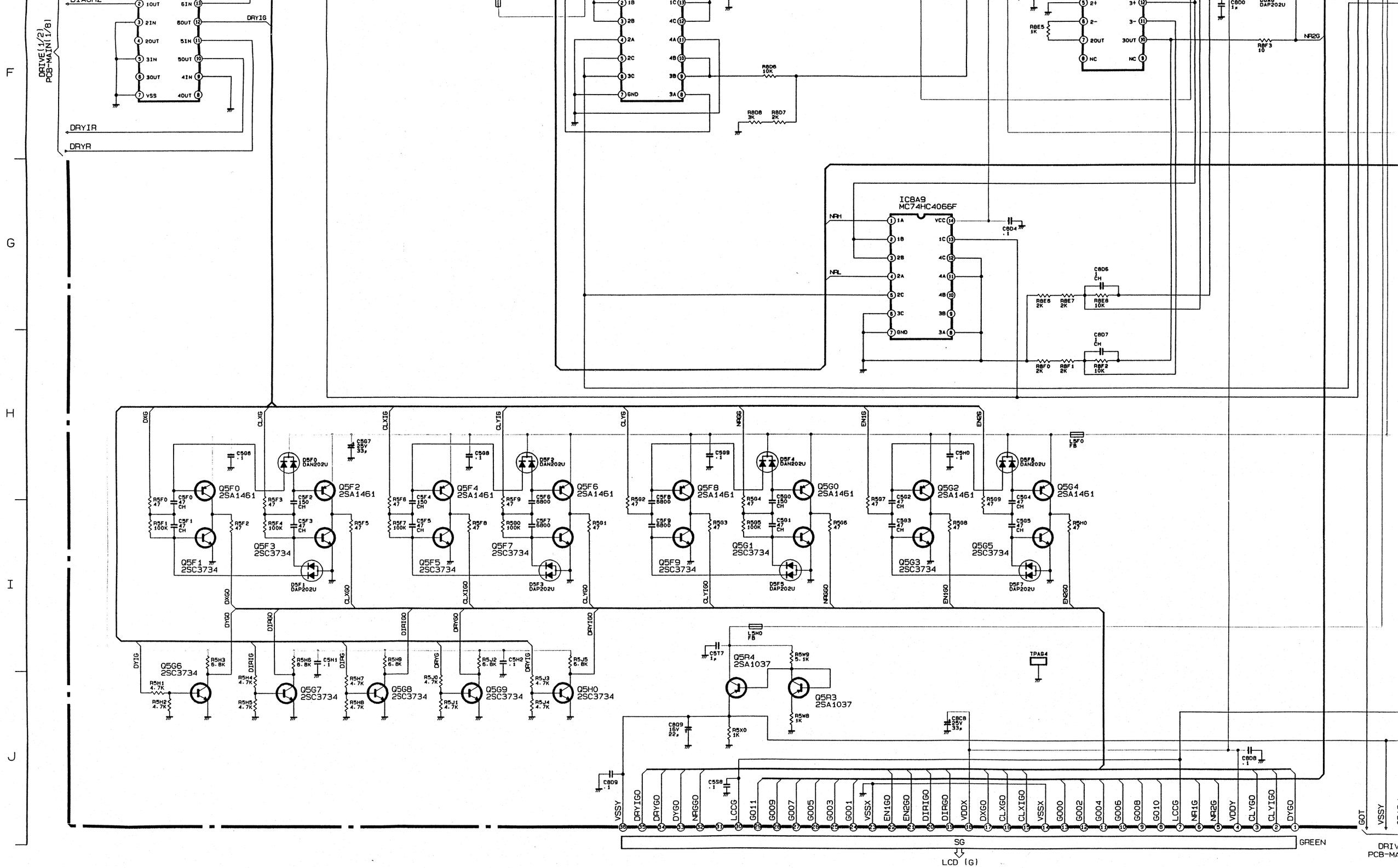
DRIVE(1/2)
PCB-MAIN(1/8)
DRYIG
DRYIR
DRYR
IC8A9
MC74HC4066F
NRH
NRL
Q5F0
2SA1461
Q5F1
2SC3734
Q5F2
2SA1461
Q5F3
2SC3734
Q5F4
2SA1461
Q5F5
2SC3734
Q5F6
2SA1461
Q5F7
2SC3734
Q5F8
2SA1461
Q5F9
2SC3734
Q5G0
2SA1461
Q5G1
2SC3734
Q5G2
2SA1461
Q5G3
2SC3734
Q5G4
2SA1461
Q5G5
2SC3734
Q5G6
2SC3734
Q5G7
2SC3734
Q5G8
2SC3734
Q5G9
2SC3734
Q5H0
2SC3734
Q5R4
2SA1037
Q5R3
2SA1037
TPAG4
SG
LCD (G)
GREEN
GOT
VSSY

LVP-X200E

④

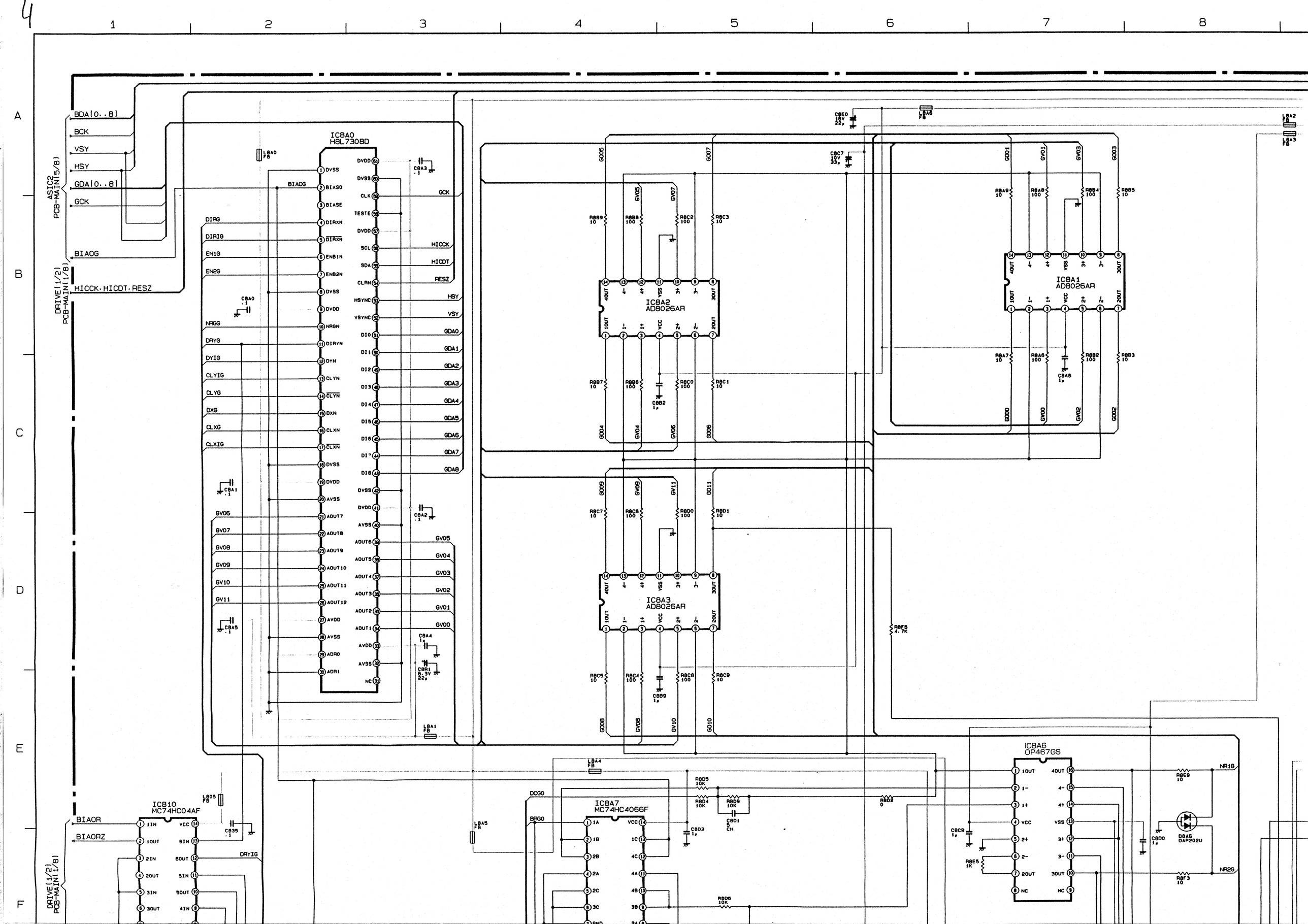

ASIC2
PCB-MAIN(5/8)
DRIVE(1/2)
PCB-MAIN(1/8)
BDA(0..8)
BCK
VSY
HSY
GDA(0..8)
GCK
BIAOG
HICCK.HICDT.RESZ
IC8A0
H8L7308D
IC8A1
AD8026AR
IC8A2
AD8026AR
IC8A3
AD8026AR
IC8A6
OP467GS
IC8A7
MC74HC4066F
IC8B10
MC74HC04AF
BIAOR
BIAORZ
DRYIG
DCGO
BRGO
NR1G
NR2G
D8A6
DAP202U

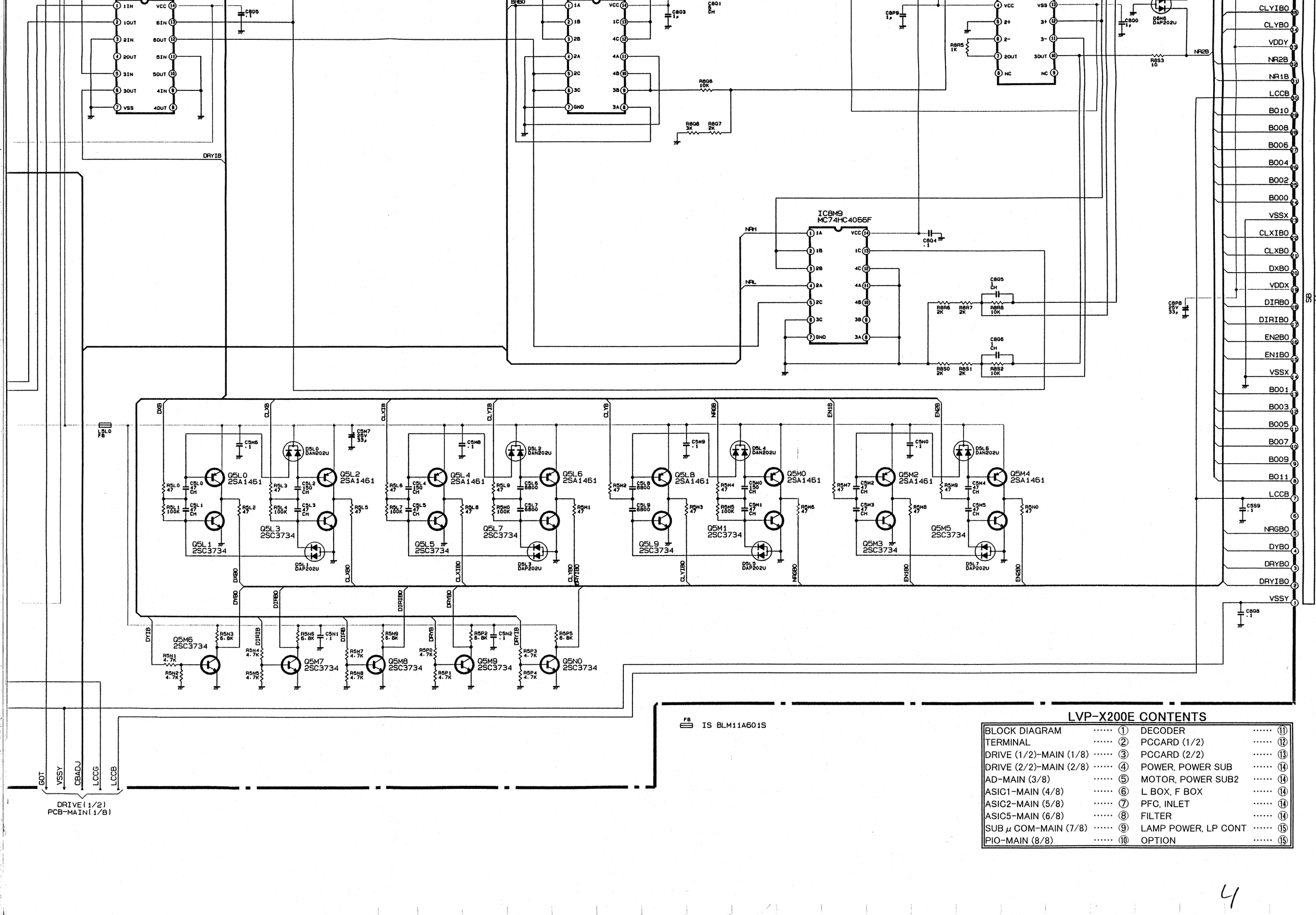

LVP-X200E CONTENTS

BLOCK DIAGRAM	①	DECODER	⑪
TERMINAL	②	PCCARD (1/2)	⑫
DRIVE (1/2)-MAIN (1/8)	③	PCCARD (2/2)	⑬
DRIVE (2/2)-MAIN (2/8)	④	POWER, POWER SUB	⑭
AD-MAIN (3/8)	⑤	MOTOR, POWER SUB2	⑭
ASIC1-MAIN (4/8)	⑥	L BOX, F BOX	⑭
ASIC2-MAIN (5/8)	⑦	PFC, INLET	⑭
ASIC5-MAIN (6/8)	⑧	FILTER	⑭
SUB µ COM-MAIN (7/8)	⑨	LAMP POWER, LP CONT	⑮
PIO-MAIN (8/8)	⑩	OPTION	⑮

9 10 11 12 13 14 15 16

DRIVE(2/2) ⚠ PWB-MAIN (2/8)

SUB#COM PCB-MAIN(7/8)

SW5A SW17 SW15 SW12

IC8M0 H8L7308D

DVSS BIAOB BIASO BIASE DIRXN DIRXN ENB1N ENB2N DVSS DVDD NRBN DIRYN DYN CLYN CLYN DXN CLXN CLXN DVSS DVDD AVSS AOUT7 AOUT8 AOUT9 AOUT10 AOUT11 AOUT12 AVDD AVSS ADR0 ADR1

DVDD DVSS CLK TESTE DVDD SCL SDA CLRN HSYNC VSYNC DIO DI1 DI2 DI3 DI4 DI5 DI6 DI7 DI8 DVSS DVDD AVSS AOUT6 AOUT5 AOUT4 AOUT3 AOUT2 AOUT1 AVDD AVSS NC

DIAB DIAIB EN1B EN2B NRGB DRYB DYIB CLYIB CLYB DXB CLXB CLXIB BV06 BV07 BV08 BV09 BV10 BV11

BCK HICCK HICDT RESZ HSY VSY BOA0 BOA1 BOA2 BOA3 BOA4 BOA5 BOA6 BOA7 BOA8 BV05 BV04 BV03 BV02 BV01 BV00

C8M0 .1 C8M1 .1 C8M2 .1 C8M3 .1 C8M4 1μ C8M5 .1 C8R2 16V 22μ

LBA2 FB LBA3 FB LBM0 FB LBM1 FB LBM2 FB LBM3 FB LBM4 FB LBM5 FB

C8S0 16V 22μ C8P7 10V 33μ

IC8M2 AD8026AR

BO05 BO07 BV05 BV07 R8N9 10 R8N8 100 R8P2 100 R8P3 10 R8N7 10 R8N6 100 R8P0 100 R8P1 10 C8N2 1μ BO04 BV04 BV06 BO06

IC8M3 AD8026AR

BO09 BV09 BV11 BO11 R8P7 10 R8P6 100 R8Q0 100 R8Q1 10 R8P5 10 R8P4 100 R8P8 100 R8P9 10 C8N9 1μ BO08 BV08 BV10 BO10

IC8M1 AD8026AR

BO01 BV01 BV03 BO03 R8N9 10 R8N8 100 R8N4 100 R8N5 10 R8N7 10 R8N6 100 R8N2 100 R8N3 10 C8N6 1μ BO00 BV00 BV02 BO02

R8S5 4.7K

IC8M6 OP467GS

1OUT 1- 1+ VCC 2+ 2- 2OUT 4OUT 4- 4+ VSS 3+ 3- 3OUT

R8R9 10 NR1B

IC8B0 MC74HC04AF

IC8M7 MC74HC4066F

DCB0 R8Q5 10K R8Q4 10K R8Q9 10K R8Q2 0 C8Q7 .1

BOT DRIVE(1/2) PCB-MAIN(1/8)

DYBO BLUE

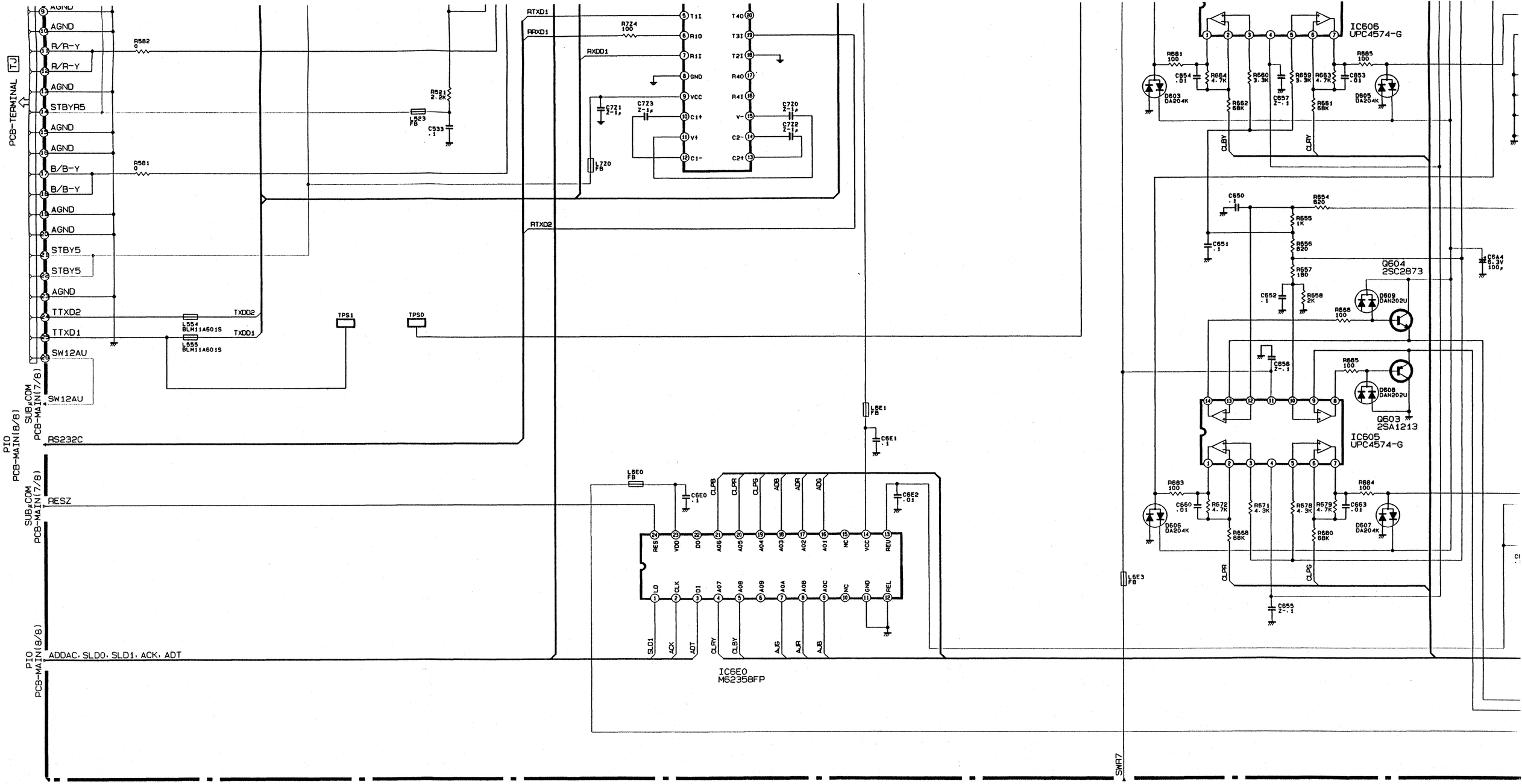

LVP-X200E CONTENTS

BLOCK DIAGRAM	①	DECODER	⑪
TERMINAL	②	PCCARD (1/2)	⑫
DRIVE (1/2)-MAIN (1/8)	③	PCCARD (2/2)	⑬
DRIVE (2/2)-MAIN (2/8)	④	POWER, POWER SUB	⑭
AD-MAIN (3/8)	⑤	MOTOR, POWER SUB2	⑭
ASIC1-MAIN (4/8)	⑥	L BOX, F BOX	⑭
ASIC2-MAIN (5/8)	⑦	PFC, INLET	⑭
ASIC5-MAIN (6/8)	⑧	FILTER	⑭
SUB μ COM-MAIN (7/8)	⑨	LAMP POWER, LP CONT	⑮
PIO-MAIN (8/8)	⑩	OPTION	⑮

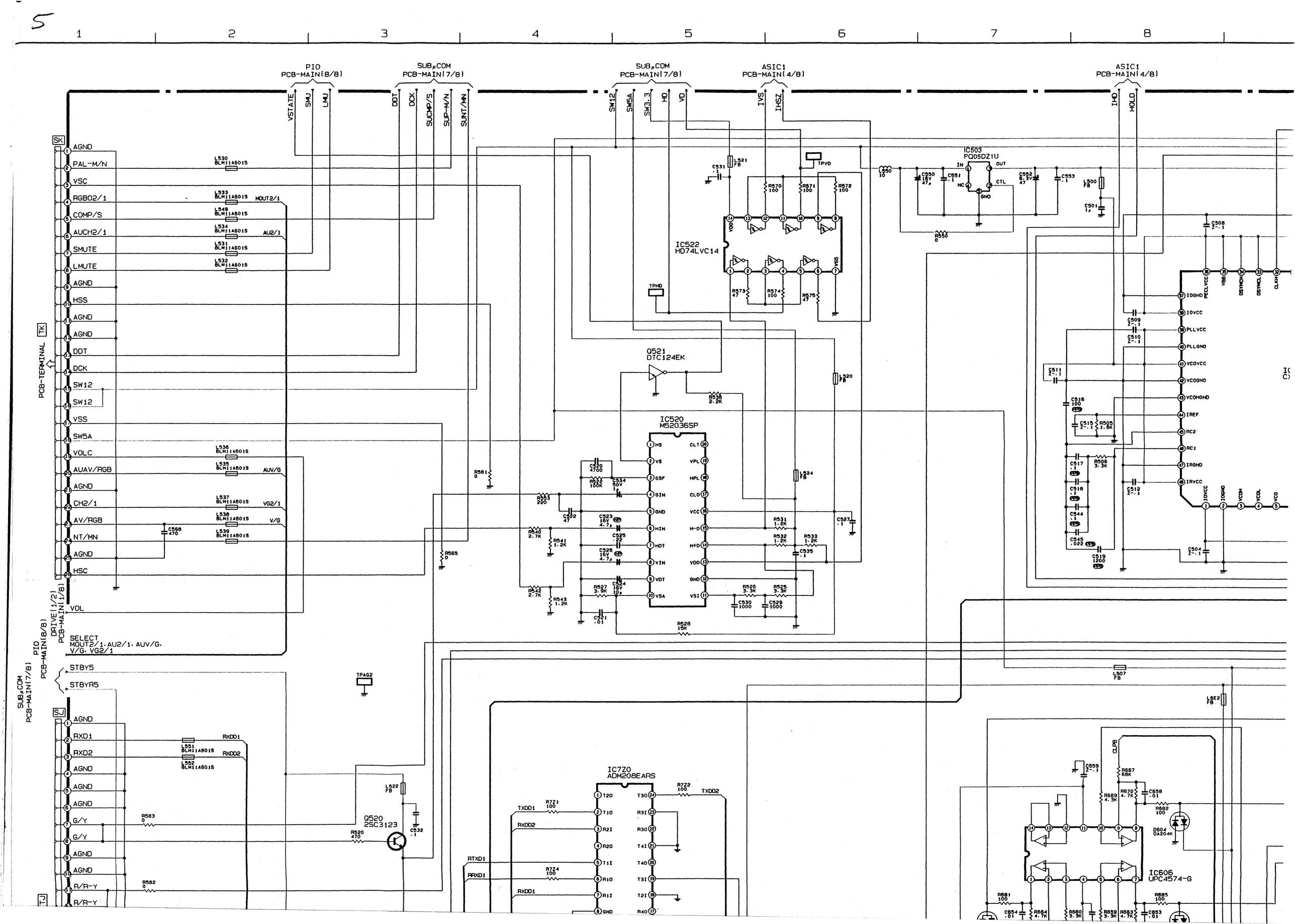

5
1
2
3
4
5
6
7
8
PIO
PCB-MAIN(8/8)
SUBμCOM
PCB-MAIN(7/8)
SUBμCOM
PCB-MAIN(7/8)
ASIC1
PCB-MAIN(4/8)
ASIC1
PCB-MAIN(4/8)
VSTATE
SMU
LMU
DDT
DCK
SUCMP/S
SUP-M/N
SUNT/MN
SW12
SW5A
SW3.3
HD
VD
IVS
IHSZ
IHD
HOLD
SK
AGND
PAL-M/N
VSC
RGBO2/1
COMP/S
AUCH2/1
SMUTE
LMUTE
AGND
HSS
AGND
AGND
DDT
DCK
SW12
SW12
VSS
SW5A
VOLC
AUAV/RGB
AGND
CH2/1
AV/RGB
NT/MN
AGND
HSC
VOL
PCB-TERMINAL
TK
DRIVE(1/2)
PCB-MAIN(1/8)
PIO
PCB-MAIN(8/8)
SELECT
MOUT2/1, AU2/1, AUV/G,
V/G, VG2/1
STBY5
STBYR5
SUBμCOM
PCB-MAIN(7/8)
SJ
AGND
RXD1
RXD2
AGND
AGND
AGND
G/Y
G/Y
AGND
AGND
R/R-Y
R/R-Y
TJ
MOUT2/1
AU2/1
AUV/G
VG2/1
V/G
RXDD1
RXDD2
TPAG2
TPVD
TPHD
IC522
HD74LVC14
IC503
PQ05DZ1U
IN
OUT
NC
CTL
GND
Q521
DTC124EK
IC520
M52036SP
Q520
2SC3123
IC7Z0
ADM208EARS
TXDD1
RXDD2
RTXD1
RRXD1
TXDD2
IC606
UPC4574-G
CLPB
IOGND
IOVCC
PLLVCC
PLLGND
VCOVCC
VCOGND
VCOHGND
IREF
RC2
RC1
IRGND
IRVCC
PECLVCC
VBB
DSYNCH
DSYNCL
CLKH
IOVCC
IOGND
VCOH
VCOL
VCO

IC603
HD74HC4053F

IC604
TL431CPS

IC601
LM1201M

IC602
LM1201M

Q601
2SC2954

Q602
2SC2954

IC608
CXA3026AQ

IC609
CXA3026AQ

TPAG3

RAD[0..15]

ASIC5
PCB-MAIN(6/8)

RGB/YUV

PIO
PCB-MAIN(8/8)

ADCLP

ASIC1
PCB-MAIN(4/8)

IS AGND

AD ⚠ PCB-MAIN (3/8)

ASIC1 PCB-MAIN(4/8)

PIO PCB-MAIN(8/8)

DSYNC

CLK/2

SO-V/G

UNLOCK

GAD[0..15]

ASIC5 PCB-MAIN(6/8)

BAD[0..15]

ASIC5 PCB-MAIN(6/8)

IC502 CXA3106AQ

IC504 TC7W14F

IC600 LM1201M

Q600 2SC2954

IC607 CXA3026AQ

IC608 CXA3026AQ

IC601 LM1201M

IC603 HD74HC4053F

SLDO

ADX

ADT

IC405
SLAA11AF05 (ASIC4)

INITZ
FRZ
STALLZ
SACTZ
R4Z4 22
C484 .1
C498 .1
C497 .1
C496 .1
C495 .1
C494 .1
C493 .1
R4Z8 0
R4S6 0
R4U5 OPEN
R4M0 22
R4M1 22
R4M3 0
R4M4 10
R4U3 OPEN
R4Z2 10
R4Z3 10
R4Y0 10X4
R4Y9 10
R4Z0 10
R4W5 10
R4W2 10X4
R4W3 10X4
R4W4 10X4
R4W5 10X4
R4W6 10X4
R4W7 10X4
R4W8 10X4
R4W9 10X4

HDCLKOUT
QDCLK
F2RASZ
F2CASZ
F2CSZ
F2WEZ
F2A0
F2A1
F2A2
F2A3
F2A4
F2A5
F2A6
F2A7
F2A8
F2A9
F2A10
F2A11
ASHD
PHD
HRST
HRSTOUT

AD PCB-MAIN(3/8)
IHSZ
IVS
HOLD

F14CNT
F24CNT
M_SEL
FSBX
RSTZ
STBYZ
HDCLKOUT
GYD(0..15)
BUD(0..15)
RVD(0..15)

ASIC5 PCB-MAIN(6/8)

FSBX
INITZ
RSTZ
HSCLK
STBYZ
HDCLKOUT
GYD(0..15)
BUD(0..15)
RVD(0..15)

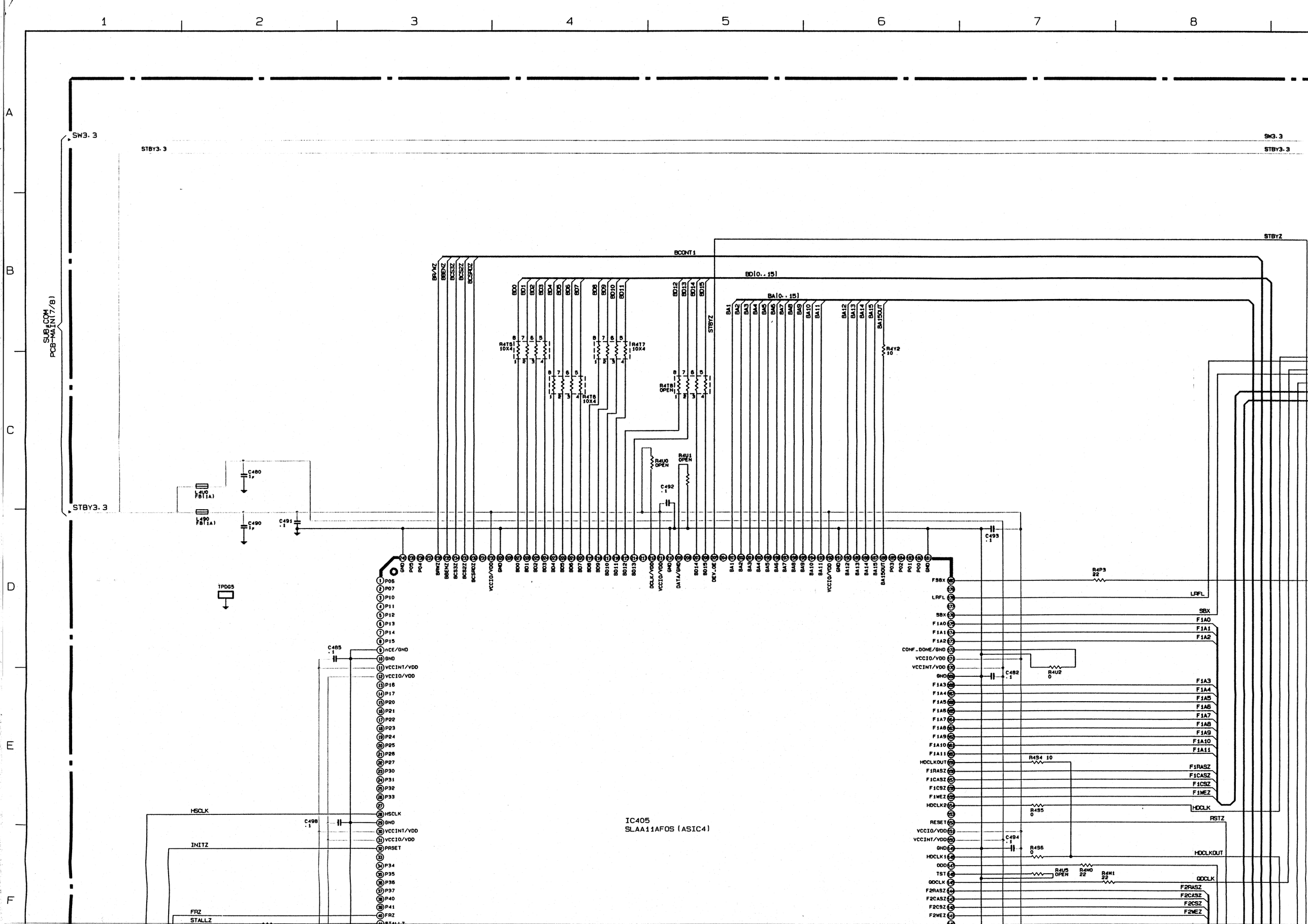

SW3.3
STBY3.3
SUB µCOM
PCB-MAIN(7/8)
BCONT1
BD[0..15]
BA[0..15]
STBYZ
BR/WZ
BBENZ
BCS3Z
BCS2Z
BCSRDZ
R4T5 10X4
R4T6 10X4
R4T7 10X4
R4T8 OPEN
R4U0 OPEN
R4U1 OPEN
R4Y2 10
C480 1µ
C490 1µ
C491 .1
C492 .1
C493 .1
L4U0 FB(1A)
L490 FB(1A)
TPDG5
C485 .1
C498 .1
HSCLK
INITZ
FRZ
STALLZ
IC405
SLAA11AF05 (ASIC4)
R4P3 22
LRFL
SBX
F1A0
F1A1
F1A2
F1A3
F1A4
F1A5
F1A6
F1A7
F1A8
F1A9
F1A10
F1A11
F1RASZ
F1CASZ
F1CSZ
F1WEZ
HDCLK
RSTZ
HDCLKOUT
QDCLK
F2RASZ
F2CASZ
F2CSZ
F2WEZ
R4U2 0
C482 .1
R4S4 10
R4S5 0
R4S6 0
C494 .1
R4U5 OPEN
R4N0 22
R4M1 22

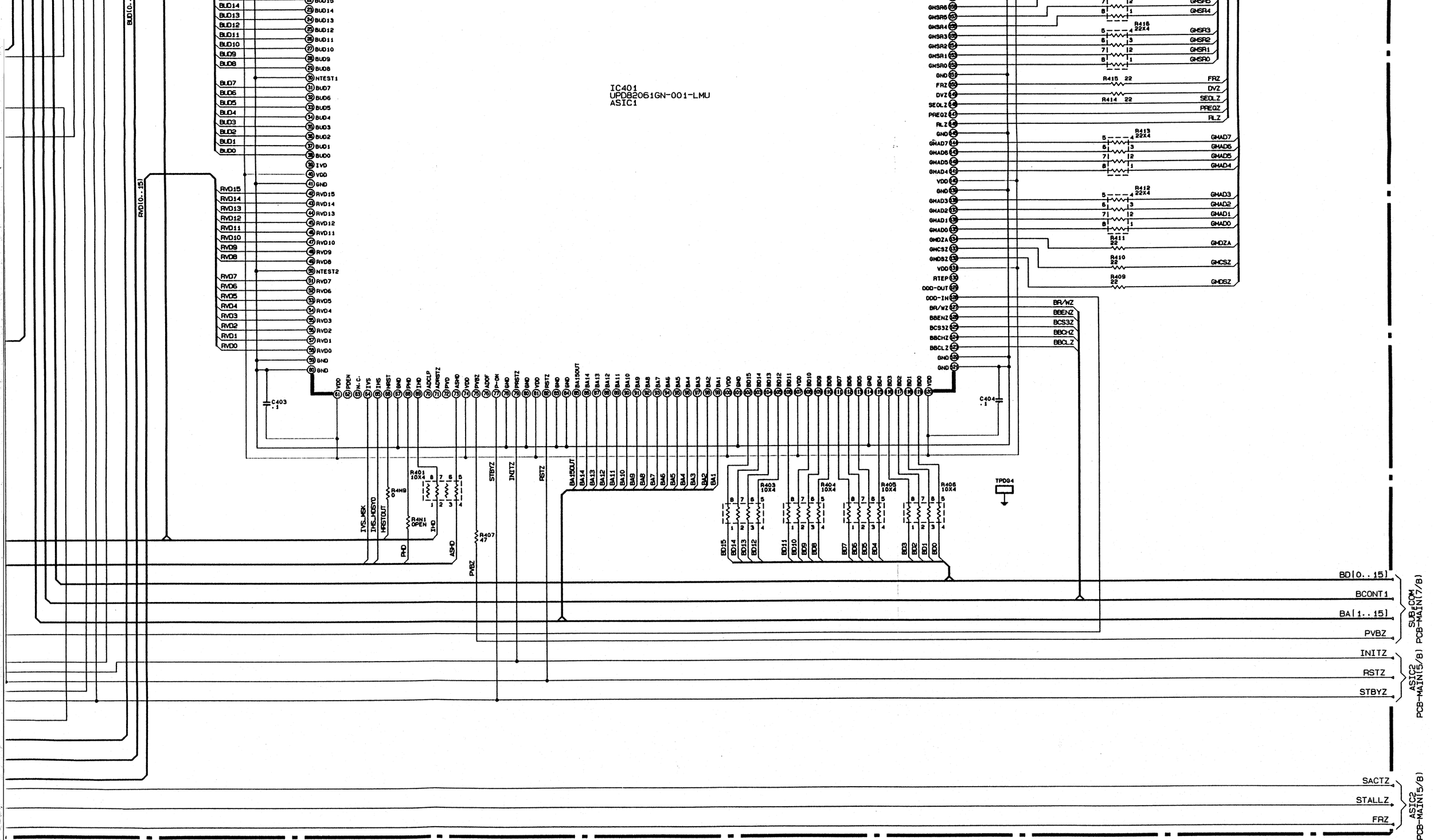

FB IS BLM11A601S

FB(1A) IS BLM11P300S

IS DGND

LVP-X200E CONTENTS

BLOCK DIAGRAM	①	DECODER	⑪
TERMINAL	②	PCCARD (1/2)	⑫
DRIVE (1/2)-MAIN (1/8)	③	PCCARD (2/2)	⑬
DRIVE (2/2)-MAIN (2/8)	④	POWER, POWER SUB	⑭
AD-MAIN (3/8)	⑤	MOTOR, POWER SUB2	⑭
ASIC1-MAIN (4/8)	⑥	L BOX, F BOX	⑭
ASIC2-MAIN (5/8)	⑦	PFC, INLET	⑭
ASIC5-MAIN (6/8)	⑧	FILTER	⑭
SUB μ COM-MAIN (7/8)	⑨	LAMP POWER, LP CONT	⑮
PIO-MAIN (8/8)	⑩	OPTION	⑮

9 10 11 12 13 14 15 16

ASIC1⚠PCB-MAIN(4/8)

AD
PCB-MAIN(3/8)

DSYNC
CLK/2
ADCLP
IHD

R4P4 0

SW3.3
STBY3.3

R4P6 0

IC4P1
HD74LVC245T

T/R
A0 A1 A2 A3 A4 A5 A6 A7
GND
VCC
OE
B0 B1 B2 B3 B4 B5 B6 B7

L4P1 FB
5V→3.3V
C4P1 .1

R4P2 10
TST

STBYZ

HDCLK
HSCLK
SCLK

F2A11 F2A10 F2A9 F2A8 F2A7 F2A6 F2A5 F2A4 F2A3 F2A2 F2A1 F2A0 F2WEZ F2CSZ F2CASZ F2RASZ
R431 10X4
R432 10X4
R433 10X4
R434 10X4

F1WEZ F1CSZ F1CASZ F1RASZ
F1A11 F1A10 F1A9 F1A8 F1A7 F1A6 F1A5 F1A4 F1A3 F1A2 F1A1 F1A0 SBX
R425 10X4
R426 10X4
R427 10X4
R428 10X4
R429 10

R423 22
R422 22

L401 FB1A1
C401 1μ
C402 .1
C405 .1

GYD[0..15]
GYD15 GYD14 GYD13 GYD12 GYD11 GYD10 GYD9 GYD8 GYD7 GYD6 GYD5 GYD4 GYD3 GYD2 GYD1 GYD0

BUD[0..15]
BUD15 BUD14 BUD13 BUD12 BUD11 BUD10 BUD9

GND VDD TST

GMSG7 GMSG6 GMSG5 GMSG4 GMSG3 GMSG2 GMSG1 GMSG0
GMSB7 GMSB6 GMSB5 GMSB4 GMSB3 GMSB2 GMSB1 GMSB0
GMSR7 GMSR6 GMSR5 GMSR4 GMSR3 GMSR2 GMSR1 GMSR0

R421 22X4
R420 22X4
R419 22X4
R418 22X4
R417 22X4
R416 22X4

SCLK
HSCLK
LRFL
PVDT
GMSG[0..7]
GMSB[0..7]
GMSR[0..7]
GMCONT
GMHOST

ASIC2
PCB-MAIN(5/8)

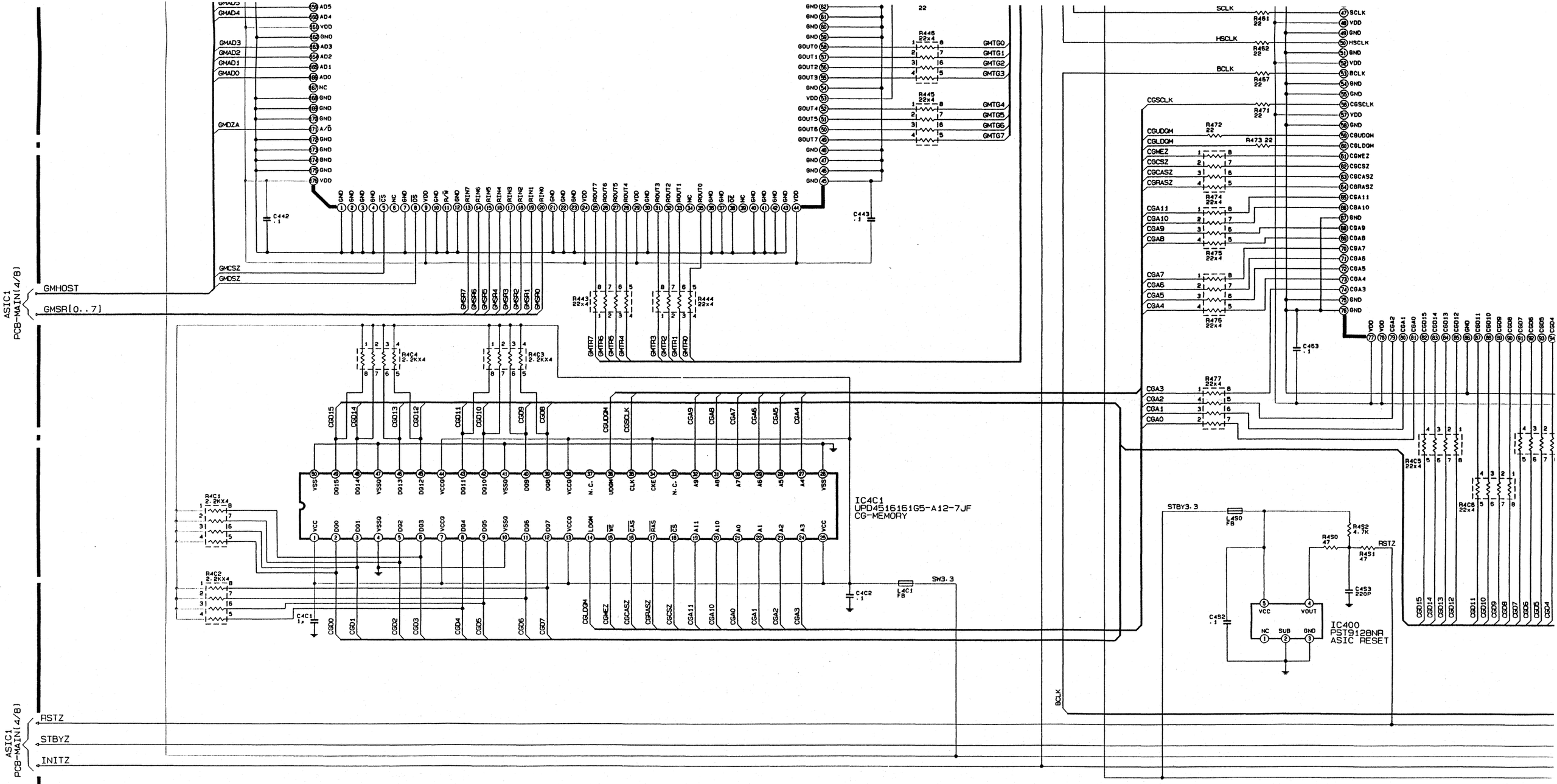

LVP-X200E CONTENTS

BLOCK DIAGRAM ·····	①	DECODER ·····	⑪
TERMINAL ·····	②	PCCARD (1/2) ·····	⑫
DRIVE (1/2)-MAIN (1/8) ·····	③	PCCARD (2/2) ·····	⑬
DRIVE (2/2)-MAIN (2/8) ·····	④	POWER, POWER SUB ·····	⑭
AD-MAIN (3/8) ·····	⑤	MOTOR, POWER SUB2 ·····	⑭
ASIC1-MAIN (4/8) ·····	⑥	L BOX, F BOX ·····	⑭
ASIC2-MAIN (5/8) ·····	⑦	PFC, INLET ·····	⑭
ASIC5-MAIN (6/8) ·····	⑧	FILTER ·····	⑭
SUB μ COM-MAIN (7/8) ·····	⑨	LAMP POWER, LP CONT ·····	⑮
PIO-MAIN (8/8) ·····	⑩	OPTION ·····	⑮

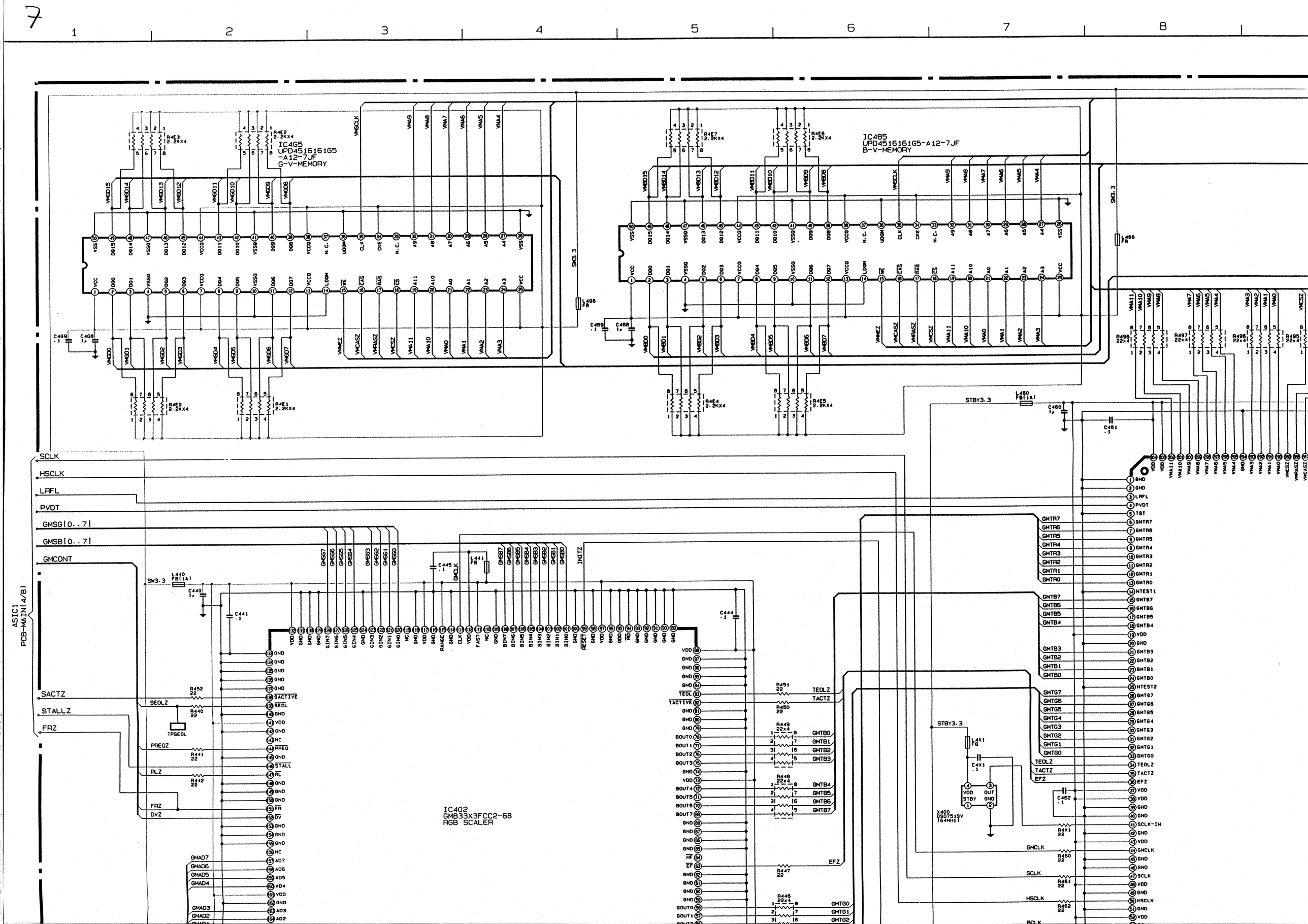

7
1
2
3
4
5
6
7
8
IC4G5
UPD4516161G5
-A12-7JF
G-V-MEMORY
IC4B5
UPD4516161G5-A12-7JF
B-V-MEMORY
SCLK
HSCLK
LRFL
PVDT
GMSG[0..7]
GMSB[0..7]
GMCONT
SACTZ
STALLZ
FRZ
ASIC1
PCB-MAIN(4/8)
IC402
GMB33X3FCC2-68
RGB SCALER
TPSEOL
X400
DS0751SV
(64MHz)
STBY3.3
SW3.3

IC403
UPD98085GL-002-NMU
ASIC2

IS BLM11A601S
IS BLM11P300S
IS DGND

9 10 11 12 13 14 15 16

ASIC2 ⚠ PCB-MAIN (5/8)

IC4R5
UPD4516161G5-A12-7JF
R-V-MEMORY

IC403
UPD82085GL-002-NMU
ASIC2

GDA[0..8]
GCK
BDA[0..8]
BCK
RDA[0..8]

DRIVE (2/2)
PCB-MAIN(2/8)

DRIVE (1/2)
PCB-MAIN(1/8)

RAD[0..15]

BAD13
BAD14
BAD15
RAD0
RAD1
RAD2
RAD3
RAD4
RAD5
RAD6
RAD7
RAD8
RAD9
RAD10
RAD11
RAD12
RAD13
RAD14
RAD15

C424 .1
C437 .1
C436 .1
C423 .1
C435 .1

F2RD4 F2RD3 F2RD2 F2RD1 F2RD0
R4J6 10X4

F1RD15 F1RD14 F1RD13 F1RD12
R4J5 10X4

F1RD11 F1RD10 F1RD9 F1RD8
R4J4 10X4

F1RD7 F1RD6 F1RD5 F1RD4
R4J3 10X4

F1RD3 F1RD2 F1RD1 F1RD0
R4J2 10X4

F1RD[0..15]

TP083

L4R3 FB
C4R4 .1

R4H0 10X4
R4H1 10X4
R4H2 10X4
R4H3 10X4
R4H4 10X4
R4H5 10X4
R4H6 10X4
R4H7 10X4
R4H8 10X4
R4H9 10X4
R4J0 10X4
R4J1 10X4

GYD[0..15]
BUD[0..15]
RVD[0..15]

HDCLKOUT
STBYZ

F2GD[0..15]
F2BD[0..15]
F2RD[0..15]

FB IS BLM11A601S
FB(1A) IS BLM11P300S
IS DGND

1 2 3 4 5 6 7 8

A B C D E F

SUBμCOM PCB-MAIN(7/8) SW3.3

SUBμCOM PCB-MAIN(7/8) STBY3.3

AD PCB-MAIN(3/8)

GAD[0..15]

BAD[0..15]

RAD[0..15]

F2GD[0..15]

F1GD[0..15]

F2BD[0..15]

F1BD[0..15]

L430 FB(1A)

C430 1μ

C431 .1

C432 .1

C433 .1

C422 .1

C423 .1

C424 .1

C425 .1

C434 .1

C438 .1

R458 0

R4L5 10X4

R4L3 10X4

R4L1 10X4

R4L2 10X4

R4L4 10X4

R4L0 10X4

R4K9 10X4

R4K7 10X4

R4K8 10X4

R4K5 10X4

R4K6 10X4

R4K4 10X4

R4K3 10X4

R4K2 10X4

R4K1 10X4

R4K0 10X4

R4J8 10X4

R4J9 10X4

R4J7 10X4

R4J6 10X4

R4J5 10X4

R4J4 10X4

R4J3 10X4

IC407 SLAA11AFOT
ASIC5
BUS_EXCHANGE

SW3.3

L4G3 FB

C4G4 .1

L4B3 FB

C4B4 .1

F1GD[0..15]

F1BD[0..15]

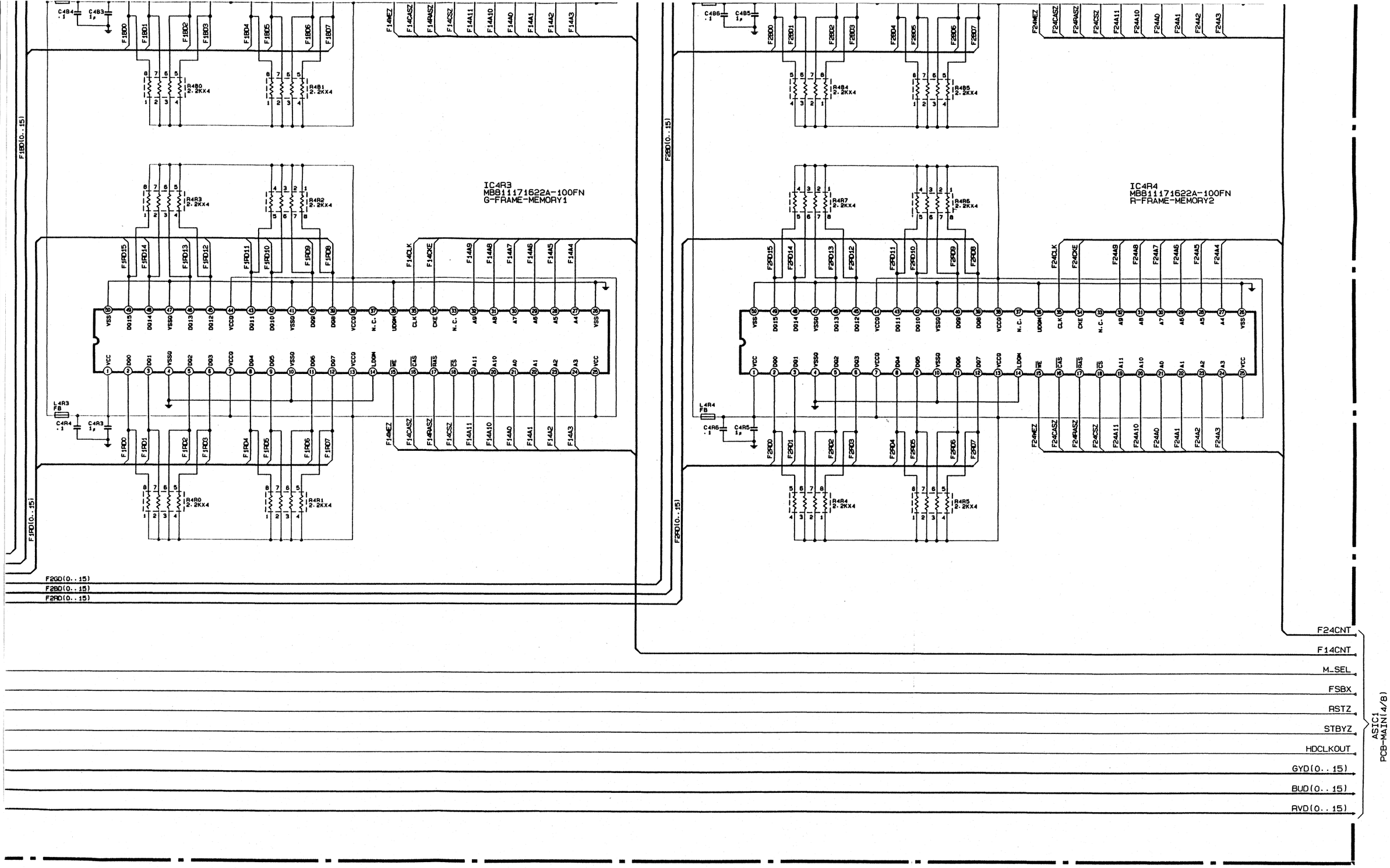

LVP-X200E CONTENTS

BLOCK DIAGRAM	①	DECODER	⑪
TERMINAL	②	PCCARD (1/2)	⑫
DRIVE (1/2)-MAIN (1/8)	③	PCCARD (2/2)	⑬
DRIVE (2/2)-MAIN (2/8)	④	POWER, POWER SUB	⑭
AD-MAIN (3/8)	⑤	MOTOR, POWER SUB2	⑭
ASIC1-MAIN (4/8)	⑥	L BOX, F BOX	⑭
ASIC2-MAIN (5/8)	⑦	PFC, INLET	⑭
ASIC5-MAIN (6/8)	⑧	FILTER	⑭
SUB μ COM-MAIN (7/8)	⑨	LAMP POWER, LP CONT	⑮
PIO-MAIN (8/8)	⑩	OPTION	⑮

ASIC5⚠PCB-MAIN(6/8)

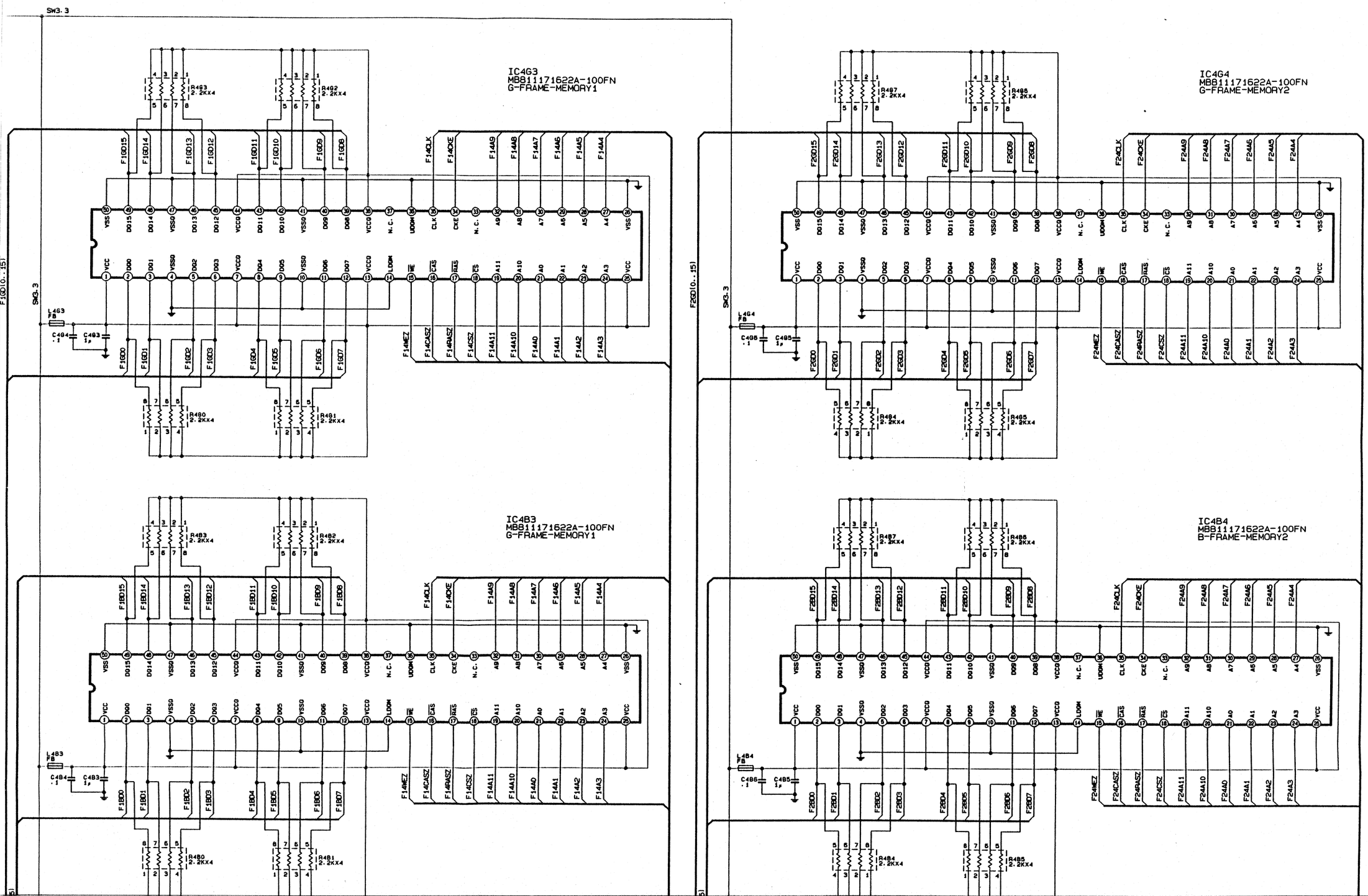

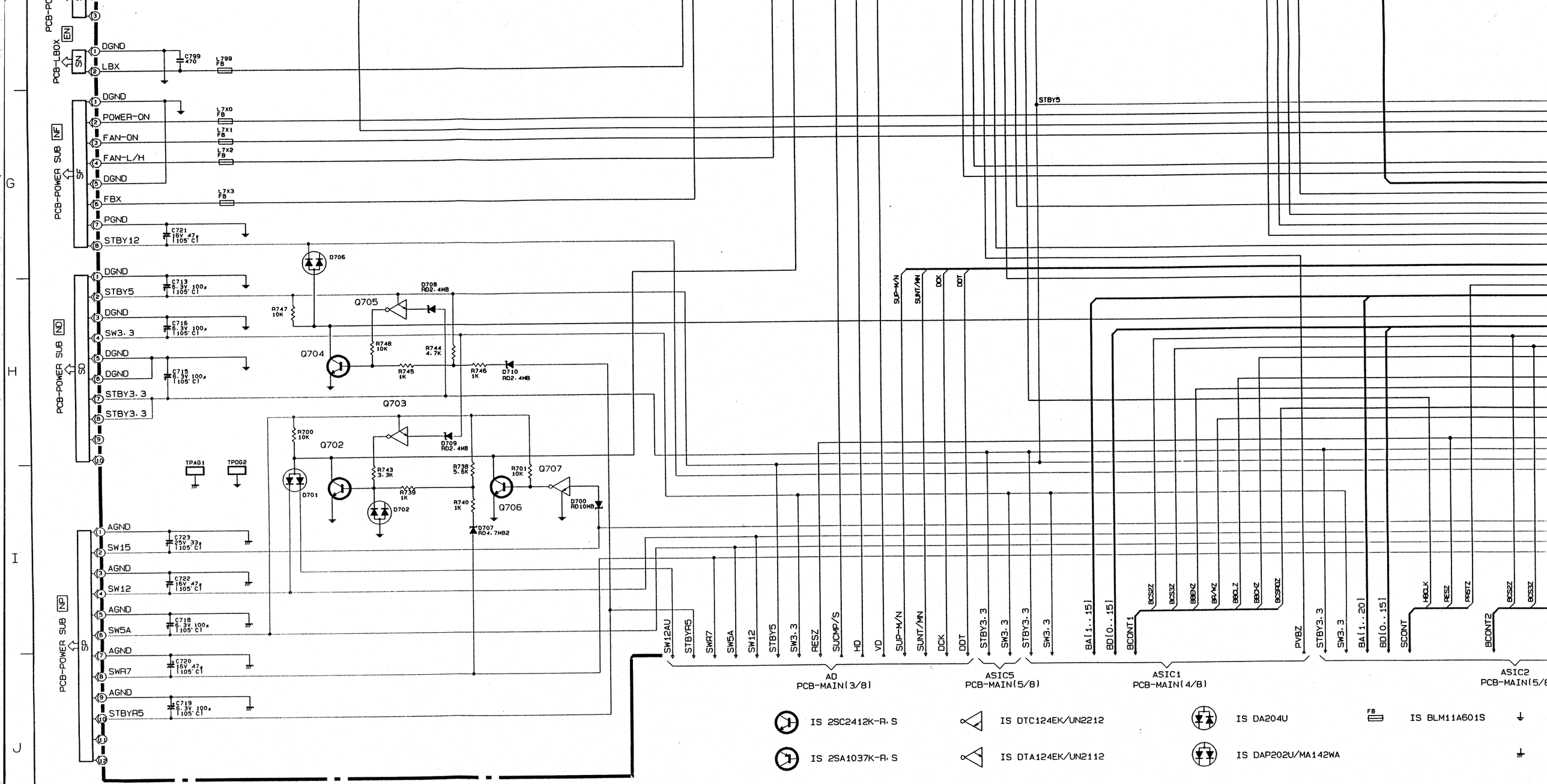

LVP-X200E CONTENTS

BLOCK DIAGRAM	①	DECODER	⑪
TERMINAL	②	PCCARD (1/2)	⑫
DRIVE (1/2)-MAIN (1/8)	③	PCCARD (2/2)	⑬
DRIVE (2/2)-MAIN (2/8)	④	POWER, POWER SUB	⑭
AD-MAIN (3/8)	⑤	MOTOR, POWER SUB2	⑭
ASIC1-MAIN (4/8)	⑥	L BOX, F BOX	⑭
ASIC2-MAIN (5/8)	⑦	PFC, INLET	⑭
ASIC5-MAIN (6/8)	⑧	FILTER	⑭
SUB μ COM-MAIN (7/8)	⑨	LAMP POWER, LP CONT	⑮
PIO-MAIN (8/8)	⑩	OPTION	⑮

9

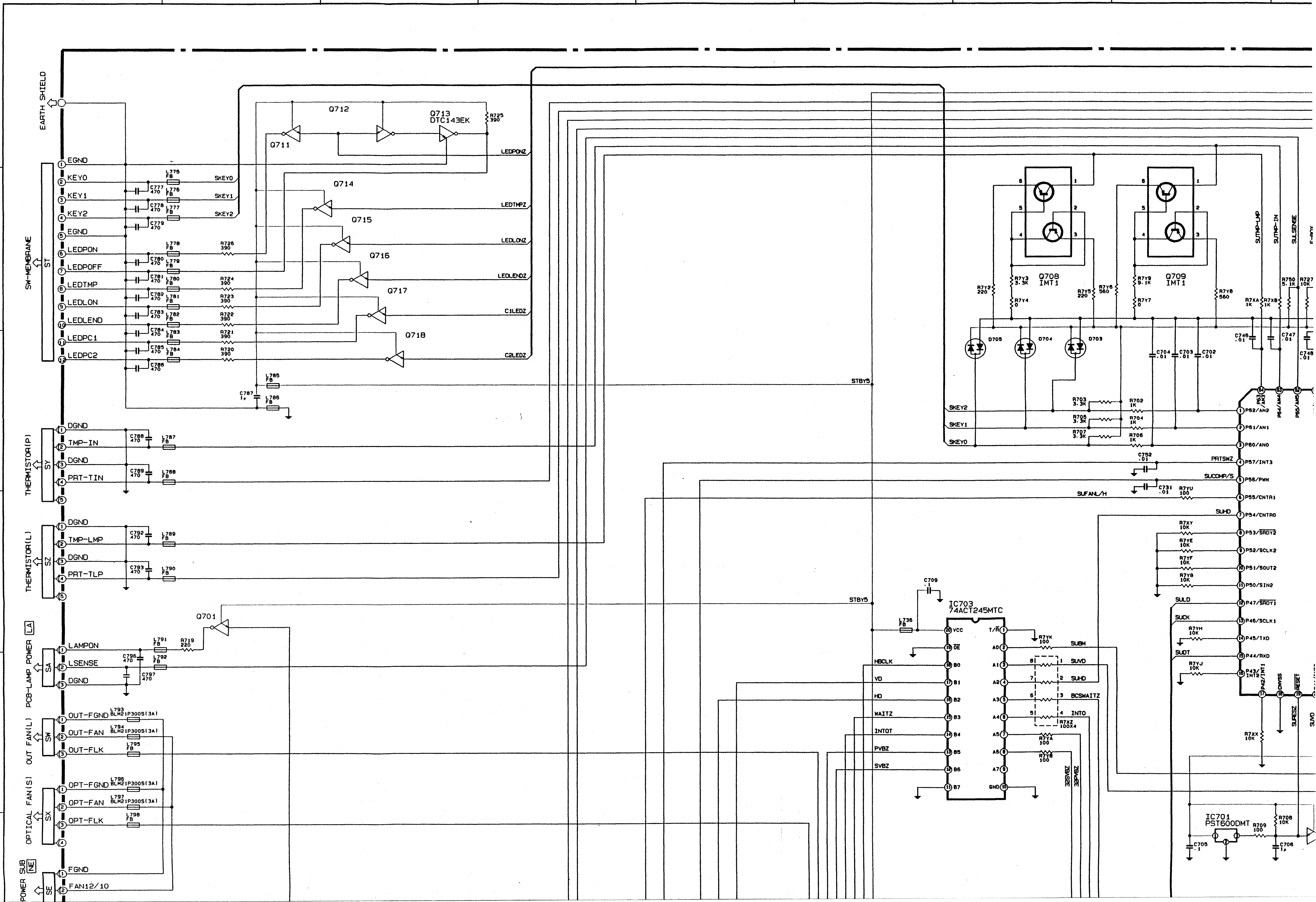
1 2 3 4 5 6 7 8
EARTH SHIELD
SW-MEMBRANE ST
EGND
KEY0
KEY1
KEY2
EGND
LEDPON
LEDPOFF
LEDTMP
LEDLON
LEDLEND
LEDPC1
LEDPC2
Q711
Q712
Q713 DTC143EK
Q714
Q715
Q716
Q717
Q718
LEDPONZ
LEDTMPZ
LEDLONZ
LEDLENDZ
C1LEDZ
C2LEDZ
SKEY0
SKEY1
SKEY2
STBY5
THERMISTOR(P) SY
DGND
TMP-IN
PRT-TIN
THERMISTOR(L) SZ
TMP-LMP
PRT-TLP
PCB-LAMP POWER LA SA
LAMPON
LSENSE
Q701
OUT FAN(L) SW
OUT-FGND
OUT-FAN
OUT-FLK
OPTICAL FAN(S) SX
OPT-FGND
OPT-FAN
OPT-FLK
POWER SUB NE SE
FGND
FAN12/10
BLM21P300S(3A)
Q708 IMT1
Q709 IMT1
D705
D704
D703
SUTMP-LMP
SUTMP-IN
SULSENSE
PRTSWZ
SUCOMP/S
SUFANL/H
SUHD
SULD
SUCK
SUDT
P62/AN2
P61/AN1
P60/AN0
P57/INT3
P56/PWM
P55/CNTR1
P54/CNTR0
P53/SRDY2
P52/SCLK2
P51/SOUT2
P50/SIN2
P47/SRDY1
P46/SCLK1
P45/TXD
P44/RXD
P43/INT2
P42/INT1
CNVSS
RESET
SURESZ
IC703 74ACT245MTC
VCC
OE
T/R
HBCLK
VD
HD
WAITZ
INTOT
PVBZ
SVBZ
SUBM
SUVD
BCSWAITZ
INTO
3SSVBZ
3SPVBZ
IC701 PST600DMT

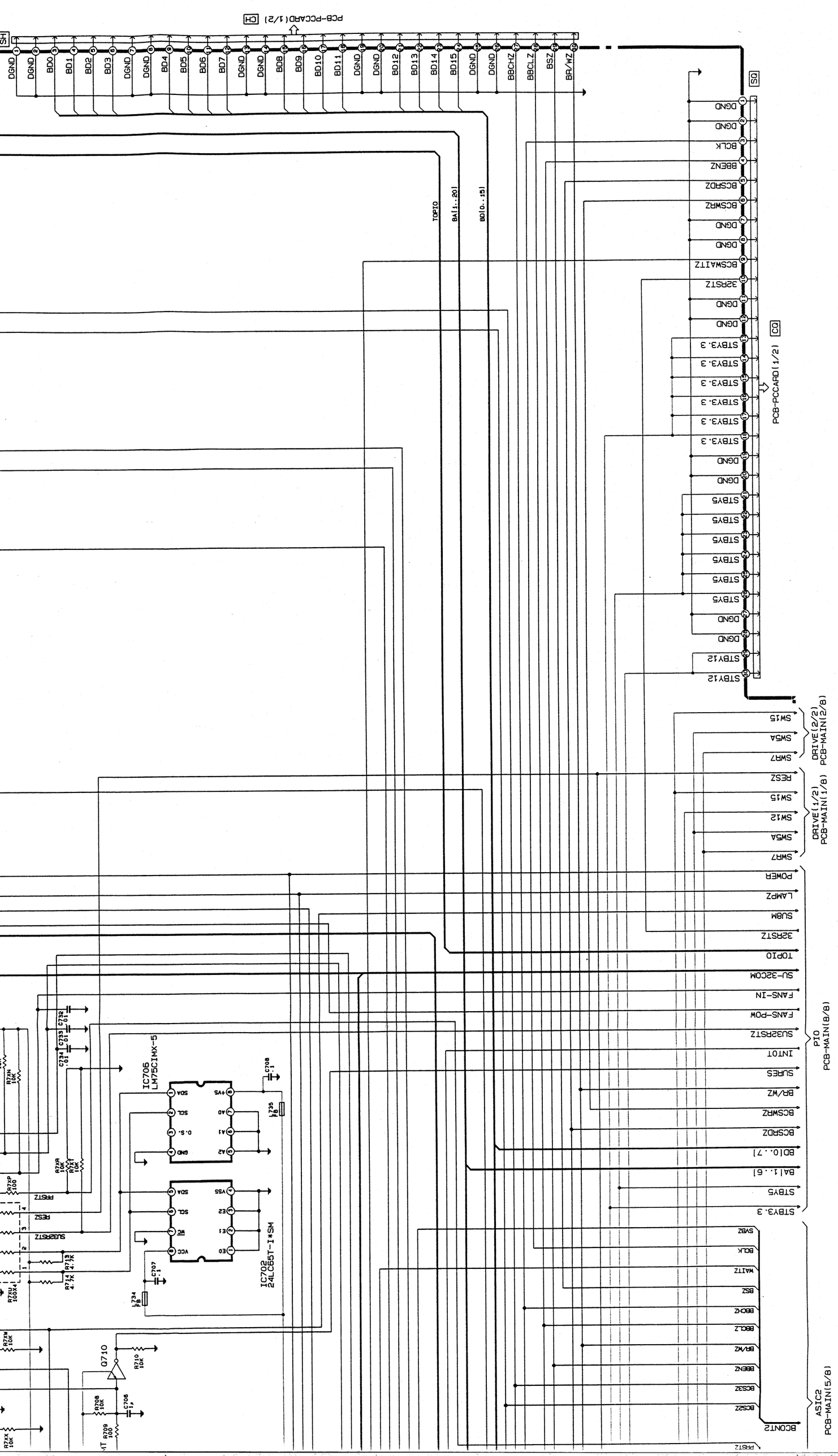
CH
PCB-PCCARD(1/2)
DGND
BD0
BD1
BD2
BD3
BD4
BD5
BD6
BD7
BD8
BD9
BD10
BD11
BD12
BD13
BD14
BD15
BBCHZ
BBCLZ
BSZ
BR/WZ
TOPIO
BA[1..20]
BD[0..15]
CO
PCB-PCCARD(1/2)
BCLK
BBENZ
BCSRDZ
BCSWRZ
BCSWAITZ
32RSTZ
STBY3.3
STBY5
STBY12
SW15
SW5A
SW7
RESZ
DRIVE(2/2)
PCB-MAIN(2/8)
DRIVE(1/2)
PCB-MAIN(1/8)
POWER
LAMPZ
SU8M
SU-32COM
FANS-IN
FANS-POW
SU32RSTZ
INTOT
SURES
BA[1..6]
BD[0..7]
PIO
PCB-MAIN(8/8)
SYBZ
WAITZ
BSZ
BBCHZ
BBCLZ
BBENZ
BCSU2
BCONT2
ASIC2
PCB-MAIN(5/8)
PRSTZ
IC706
LM75C1MX-5
IC702
24LC65T-I*SM
Q710
IS DGND
IS AGND

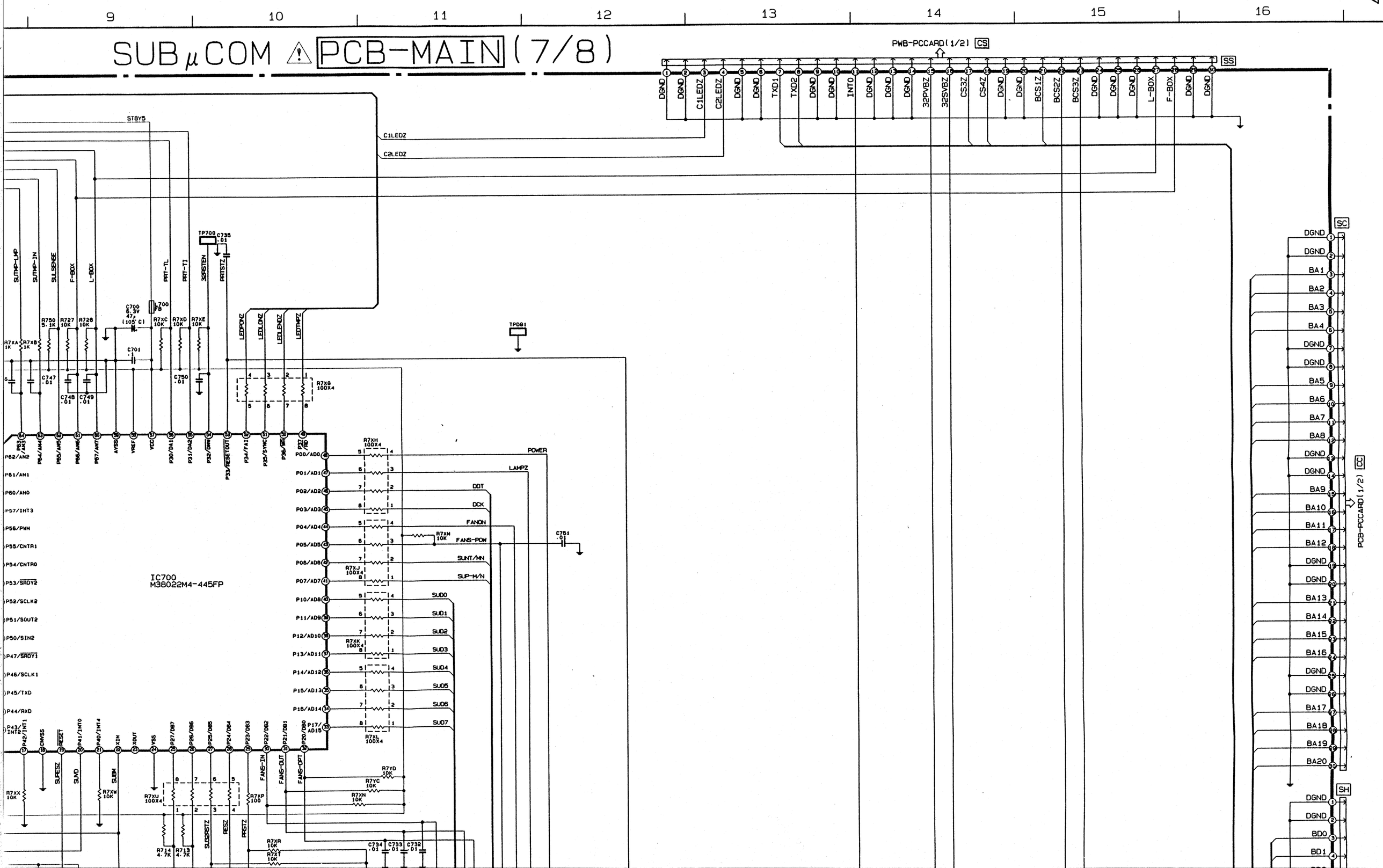

SUBμCOM ⚠ PCB-MAIN (7/8)
PWB-PCCARD(1/2) CS
SS
SC
CC
SH
PCB-PCCARD(1/2)
IC700
M38022M4-445FP
STBY5
C1LEDZ
C2LEDZ
SUTMP-LMP
SUTMP-IN
SULSENSE
F-BOX
L-BOX
PRT-TL
PRT-TI
32RSTEN
PRTSTZ
LEDPONZ
LEDLONZ
LEDLENDZ
LEDTMPZ
TP700
TPDG1
POWER
LAMPZ
DDT
DCK
FANON
FANS-POW
SUNT/MN
SUP-M/N
SUD0
SUD1
SUD2
SUD3
SUD4
SUD5
SUD6
SUD7
SUPESZ
SUVD
SUBM
FANS-IN
FANS-OUT
FANS-OPT
SUB2RSTZ
RESZ
PRSTZ
DGND
C1LEDZ
C2LEDZ
TXD1
TXD2
INT0
32PVBZ
32SVBZ
CS3Z
CS4Z
BCS1Z
BCS2Z
BCS3Z
L-BOX
F-BOX
BA1
BA2
BA3
BA4
BA5
BA6
BA7
BA8
BA9
BA10
BA11
BA12
BA13
BA14
BA15
BA16
BA17
BA18
BA19
BA20
BD0
BD1

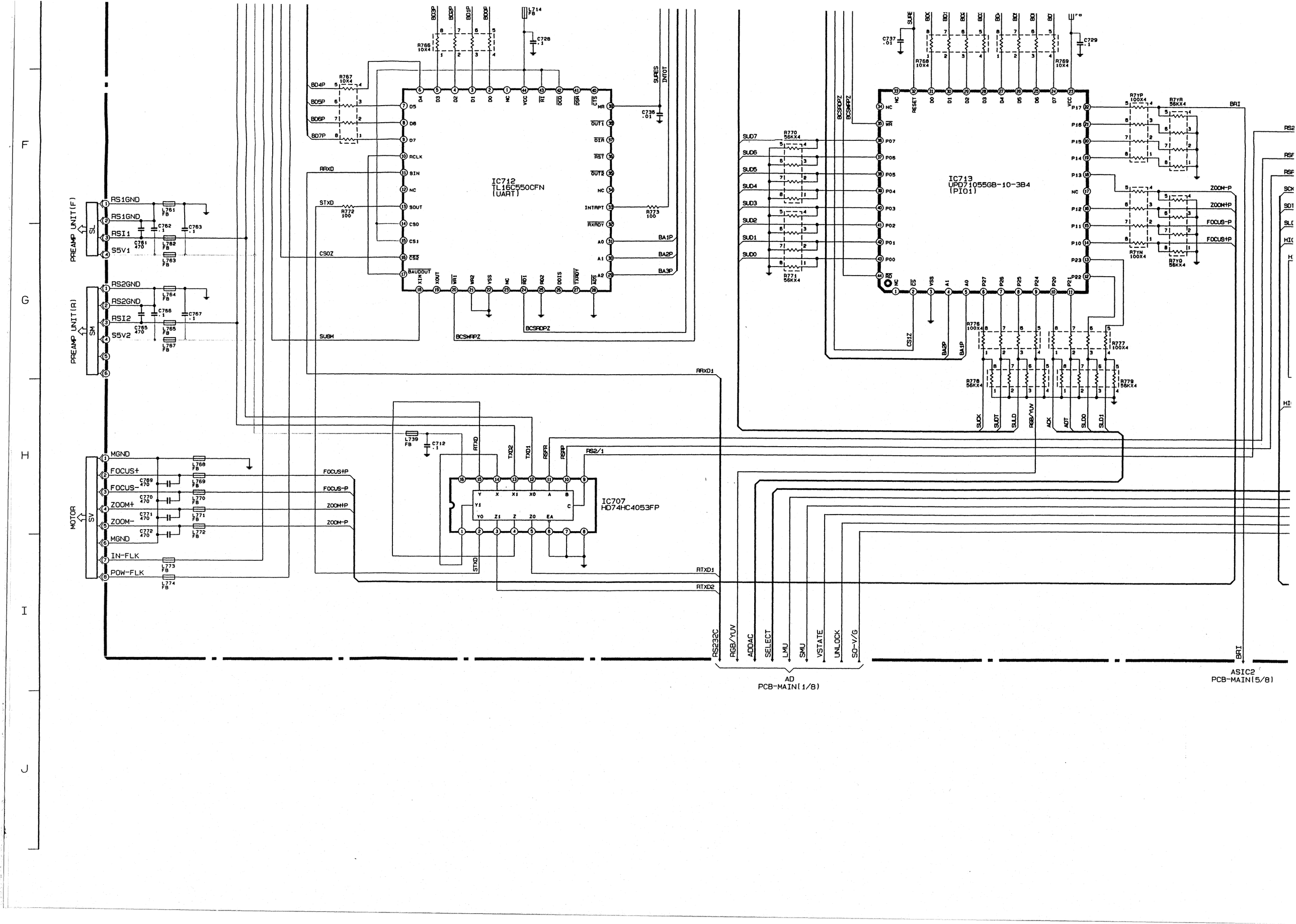

IC712
TL16C550CFN
(UART)
IC713
UPD71055GB-10-3B4
(PIO1)
IC707
HD74HC4053FP
PREAMP UNIT(F)
PREAMP UNIT(R)
MOTOR
RS1GND
RSI1
S5V1
RS2GND
RSI2
S5V2
MGND
FOCUS+
FOCUS-
ZOOM+
ZOOM-
IN-FLK
POW-FLK
RS232C
RGB/YUV
ADDAC
SELECT
LMU
SMU
VSTATE
UNLOCK
SO-V/G
AD
PCB-MAIN(1/8)
ASIC2
PCB-MAIN(5/8)

1 2 3 4 5 6 7 8

A B C D E F

SUB μCOM
PCB-MAIN(7/8)

STBY5 STBY3.3 BA[1..6] BD[0..7] BCSRDZ BCSWRZ BRDWRZ SURES INTOT SU32RSTZ FANS-POW FANS-IN SU-32COM TOPIO 32RSTZ SUBM LAMPZ POWER

TXD2 TXD1 BCS1Z CS3Z CS4Z

STBY3.3 L710 FB C724 .1

BA1 BA2 BA3 BCSRDZ BCSWRZ SU32RSTZ

IC708
HD74LVC245T

R753 56X4 R754 56X4

BA1P BA2P BA3P BCSRDZ BCSWRZ 32RSTZ

BAP[1..3]
BDP[0..7]

BCS1Z BA5 BA5 BA4

IC709
HD74LVC138T

R759 22 R756 22X4 C725 .1 L711 FB

CS4Z CS3Z CS2Z CS1Z CS0Z

STBY3.3 L713 FB C727 .1

BCS1Z BD0 BD1 BD2 BD3 BD4 BD5 BD6 BD7

R758 10X4 R759 10X4

IC711
HD74LVC245T

BRDWRZ R760 10X4 R761 10X4 R762 56KX4 R763 56KX4

BD0P BD1P BD2P BD3P BD4P BD5P BD6P BD7P

STBY5

BD0P BD2P BD1P BD0P L714 FB C728 .1

R766 10X4 R767 10X4

BD4P BD5P BD6P BD7P

D4 D3 D2 D1 D0 NC VCC RI DCD DSR CTS MR OUT1 DTR RST

D5 D6 D7 RCLK

SURES INTOT C736 .01

SURES BD0P BD1P BD2P BD3P BD4P BD5P BD6P BD7P L715 FB C737 .01 C729 .1

R768 10X4 R769 10X4

BCSRDZ BCSWRZ

NC RESET D0 D1 D2 D3 D4 D5 D6 D7 VCC

NC WR P07 P06 P17 P16 P15 P14

SUD7 SUD6 R770 56KX4

R7YP 100X4 R7YR 56KX4 BRI

RS2 RSFF

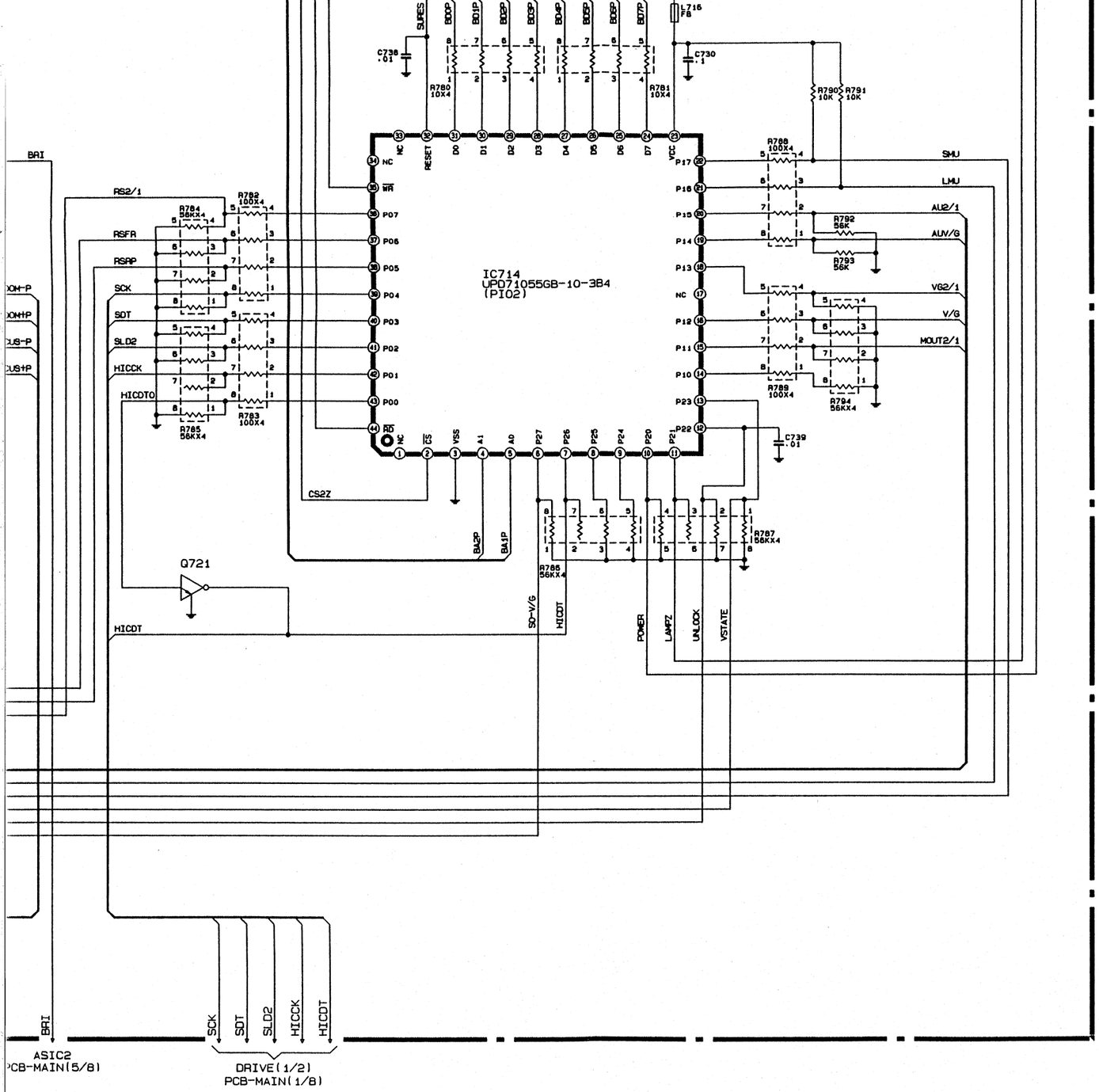

IS BLM11A601S

IS DTC124EK/UN2212

IS DGND

LVP-X200E CONTENTS

BLOCK DIAGRAM	①	DECODER	⑪
TERMINAL	②	PCCARD (1/2)	⑫
DRIVE (1/2)-MAIN (1/8)	③	PCCARD (2/2)	⑬
DRIVE (2/2)-MAIN (2/8)	④	POWER, POWER SUB	⑭
AD-MAIN (3/8)	⑤	MOTOR, POWER SUB2	⑭
ASIC1-MAIN (4/8)	⑥	L BOX, F BOX	⑭
ASIC2-MAIN (5/8)	⑦	PFC, INLET	⑭
ASIC5-MAIN (6/8)	⑧	FILTER	⑭
SUB μCOM-MAIN (7/8)	⑨	LAMP POWER, LP CONT	⑮
PIO-MAIN (8/8)	⑩	OPTION	⑮

9 10 11 12 13 14 15 16

PIO ⚠PCB-MAIN(8/8)

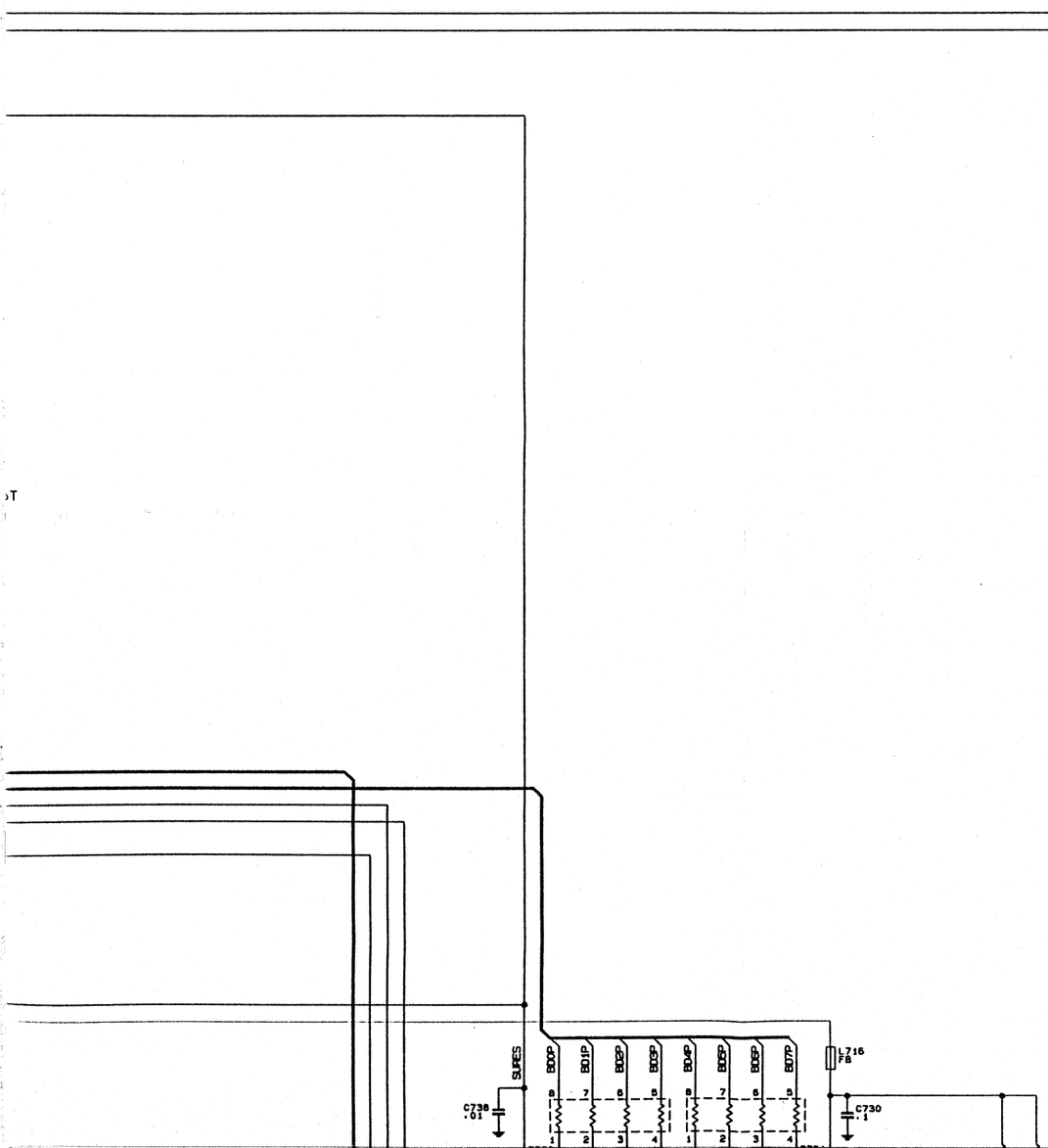

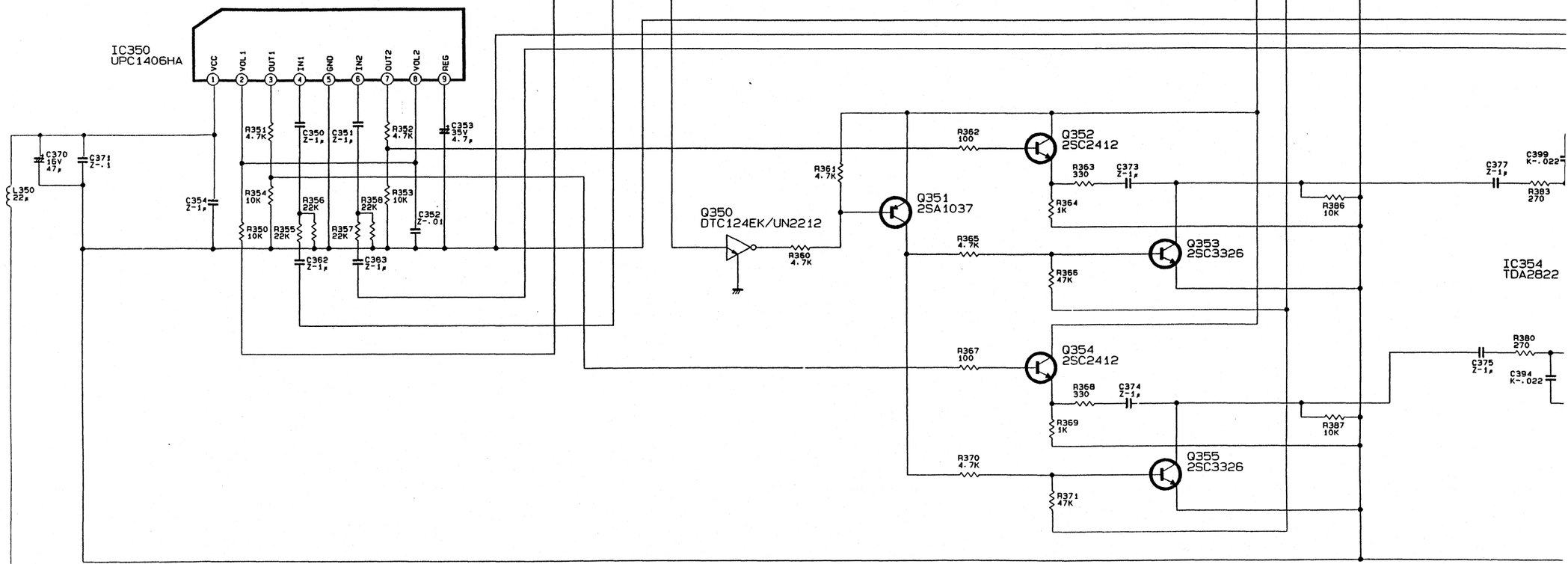

LVP-X200E CONTENTS

BLOCK DIAGRAM	①	DECODER	⑪
TERMINAL	②	PCCARD (1/2)	⑫
DRIVE (1/2)-MAIN (1/8)	③	PCCARD (2/2)	⑬
DRIVE (2/2)-MAIN (2/8)	④	POWER, POWER SUB	⑭
AD-MAIN (3/8)	⑤	MOTOR, POWER SUB2	⑭
ASIC1-MAIN (4/8)	⑥	L BOX, F BOX	⑭
ASIC2-MAIN (5/8)	⑦	PFC, INLET	⑭
ASIC5-MAIN (6/8)	⑧	FILTER	⑭
SUB µ COM-MAIN (7/8)	⑨	LAMP POWER, LP CONT	⑮
PIO-MAIN (8/8)	⑩	OPTION	⑮

FB IS BLM11A601S

PCB-TERMINAL TA — GA

1 AGND
2 DDT
3 DCK
4 COMP/S
5 SW12
6 AGND
7 SW5A
8 AGND
9 YIN
10 AGND
11 CIN
12 AGND
13 CVBS
14 PAL-M/N

IC2A0
M52055FP

9 IN3H
10 GND3
11 IN2L
12 CONT2
13 VCC
14 IN2H
15 GND1
16 IN1L
8 IN3L
7 CONT3
6 OUT3
5 OUT2
4 GND2
3 OUT1
2 CONT1
1 IN1H

C2H7 Z-.1
C2H8 Z-.1
C2H9 Z-.1
C2A1 K-.1
C2A2 6.3V 47μ
C2A3 Z-1μ
C2A5 6.3V 47μ
C2A6 6.3V 47μ
R2A0 100
R2A1 100
R2A2 100
L2A1 22
L2B3 FB
R2J8 1.2K
R2J9 1.2K

IC2A2
TDA9141

32 SREF
31 SXTAL
30 RXTAL
29 CPLL
28 FREF
27 AGND
26 Y/CVIN
25 CIN
24 HPLL
23 FSC
22 ADD
21 R
20 G
19 B
18 F
17 HA
1 -(R-Y)
2 -(B-Y)
3 UIN
4 VIN
5 SCL
6 SDA
7 VCC
8 DIG
9 DGND
10 SAN
11 VA
12 YOUT
13 YOUT
14 UOUT
15 I/O
16 XLLC

C2C3 .1
C2B9 Z-1μ
C2B8 Z-.1
C2C6 .1
C2C4 15 CH
C2C2 .1
C2C1 3300
C2C0 .1
C2E1 .1
C2E4 .1
C2E0 3300
C2E5 .022
R2B0 F-15K
X2A1 4.43M
R2A9 F-82K
C2D4 Z-.1
C2D3 Z-1μ
C2D1 Z-.1
C2D2 6.3V 22μ
C2C7 K-.1
C2C8 K-.1
C2C9 K-.1
C2D0 K-.1
L2A3 22
L2A4 22

IC2A4
NJM78M08DLA

V OUT 1
GND 2
V IN 3

C2D7 Z-.1
C2H1 16V 47μ
C2D8 Z-.1
C2D9 16V 47μ
L2A5 FB

IC2A3
TDA4665T

16 INR
15 NC
14 INB
13 NC
12 OUTB
11 OUTR
10 GND
9 VP1
1 VP2
2 NC
3 GND
4 IC
5 SAN
6 NC
7 IC
8 IC

C2D5 Z-.1
C2D6 6.3V 22μ

R2A6 4.7K
R2A5 4.7K
R2A7 100
R2A8 100
DCK
DDT

Q2C8
DTC124EK/UN2212
D2A1
DAP202K
R2C2 4.7K
R2C3 10K
R2C4 10K
R2C5 4.7K
R2C9 10K
Q2C9
DTC124EK/UN2212

Q2B2
2SC3123
Q2B3
2SC3123
Q2B4
2SC3123

X2A3 PAL-M 3.575M
X2A2 PAL-N 3.582M
X2A0 NTSC 3.579M
C2F1 12 CH
C2F0 18 CH
C2C5 15 CH

R2D0 10K
R2D1 10K

R2B2 1.8K
R2B4 1.8K
R2B1 47
R2B3 47
C2H2 Z-.1

Q2A0
2SA1037
Q2A1
2SA1037

-UOUT
-VOUT
YOUT

-VOUT

YOUT

L352 22μ

L353 22μ

AGND 1
HA 2
NT/MN 3
SMUTE 4
VOLC 5
AGND 6
STBY5 7
STBYR5 8
AGND 9
AUL 10
AGND 11
AUR 12
SW12AU 13
AGND 14

PCB-TERMINAL TC

L358 BLM11P600S

L359 BLM11P600S

GC

C377 Z-1μ
C399 K-.022
R384 10K
C3A0 10V 33μ
R383 270

R385 4.7 1/4W
C3A1 16V 470μ
C3A3 .1
C3A2 16V 470μ

IC354 TDA2822

16 IN2+	15 N.C.	14 IN2-	13 GND	12 GND	11 OUT2	10 N.C.	9 N.C.
1 IN1+	2 N.C.	3 IN1-	4 GND	5 GND	6 OUT1	7 N.C.	8 VS

R380 270
C375 Z-1μ
C394 K-.022
R381 10K
C395 10V 33μ
C393 16V 470μ
C392 Z-.1

L360 BLM11P300S

C396 16V 470μ
R382 4.7 1/4W
C398 .1
C397 16V 470μ

AUGND 1
SW12AU 2
3
4

GV

PCB-POWER SUB NV

SPRGND 1
SP-R 2

GD

SPEAKER-R

L354 BLM11P600S
L355 BLM11P600S

SPLGND 1
SP-L 2
3

GE

SPEAKER-L

L357 BLM11P600S
L356 BLM11P600S

⚠ PCB-DECODER

L2B6 FB
R2D4 2K
R2D7 10K
C2H3 Z-.1
R2D9 47
Q2B6 2SC2412
R2D5 47
R2K0 1K
L2B4 22μ
L2B5 47μ
R2K1 1K
C2J0 7 CH
C2J1 33 CH
C2J2 82 CH
Q2B5 2SC2412
C2F4 Z-.1
C2F5 6.3V 47μ
R2E0 1K
R2D6 3.3K
R2D8 10K

L2B7 FB
R2E7 2K
R2F0 10K
C2H4 Z-.1
R2F2 47
Q2B9 2SC2412
R2E8 100
R2K2 1K
L2B8 22μ
L2B9 47μ
R2K3 1K
C2J3 7 CH
C2J4 33 CH
C2J5 82 CH
Q2B8 2SC2412
C2F8 Z-.1
C2F9 6.3V 47μ
R2F3 1K
R2E9 3.3K
R2F1 10K

L2B2 22μ
L2C0 FB
C2H5 Z-.1
L2C7 220μ
R2M0 2.2K
R2M3 150
C2K9 220 CH
C2K8 K-4700
R2L9 2.7K
C2L0 6.3V 22μ
R2L7 1K
R2L8 2K
C2L1 150 CH
C2K6 15 CH
C2K7 10V 33μ
C2L4 Z-.1
R2M1 5.6K
R2M2 3K
C2K5 Z-1
C2L5 6.3V 47μ
IC2A5 NJM2209M
(8) FCOMP (9) N.C. (10) VIN (11) N.C. (12) DELAY (13) GND (14) N.C.
(7) DIFOUT (6) N.C. (5) CONT (4) VCC (3) DIFIN (2) N.C. (1) VOUT

R2M4 5.6K
R2M7 2K
Q2A2 2SA1037
R2G1 330
Q2C1 2SC2412
C2L3 82 CH
R2B5 47
R2M5 2.7K
R2M6 390
R2H0 560

L2A5 FB
C2D8 Z-.1
C2D9 16V 47μ
C2H2 Z-.1

AGND (1)
VA (2)
AGND (3)
YOUT (4)
AGND (5)
UOUT (6)
AGND (7)
VOUT (8)
PCB-TERMINAL TB
GB

-UOUT
-VOUT
YOUT

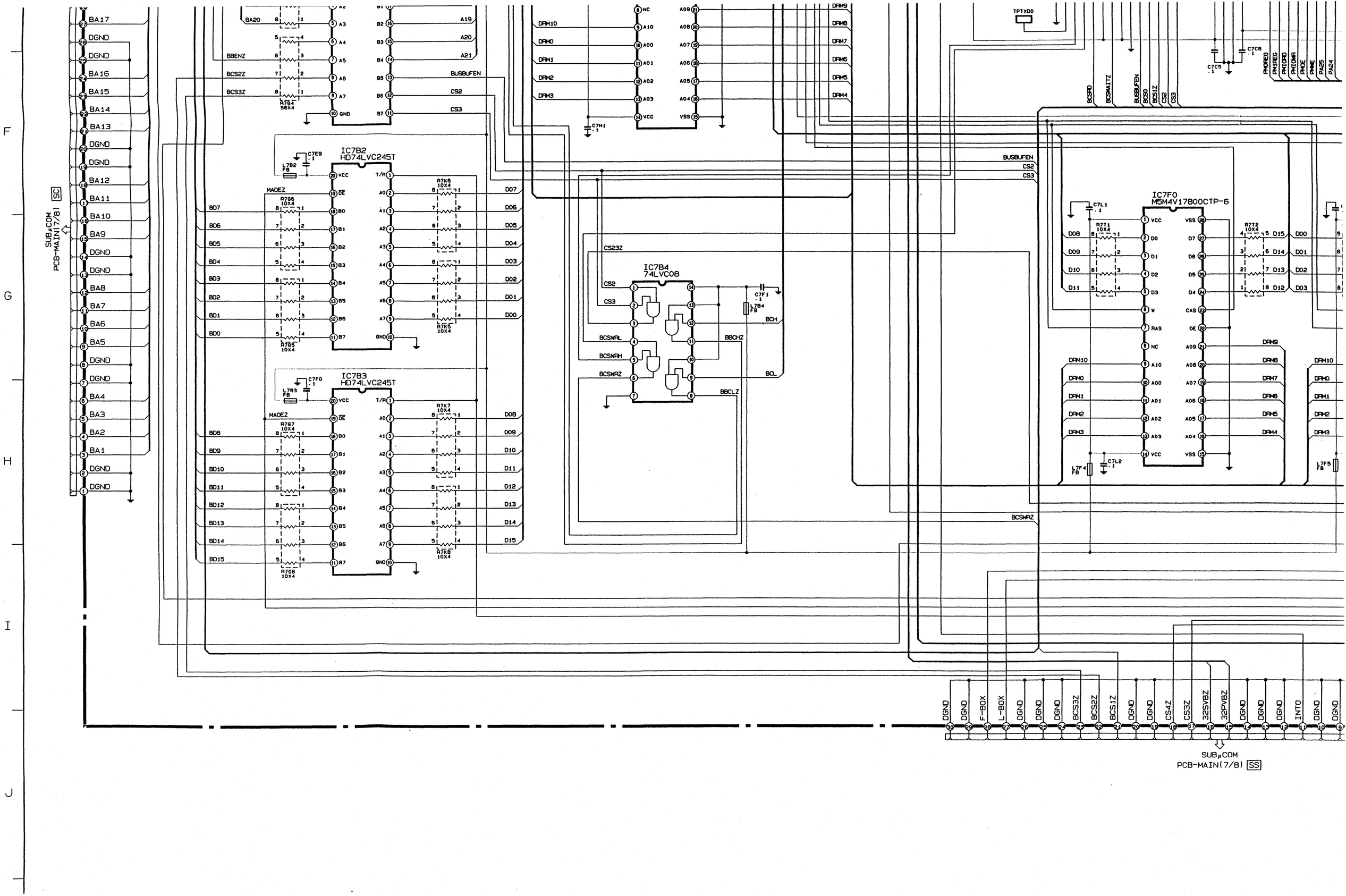

IC7B2
HD74LVC245T
IC7B3
HD74LVC245T
IC7B4
74LVC08
IC7F0
M5M4V17800CTP-6
SUBμCOM
PCB-MAIN(7/8) SC
SUBμCOM
PCB-MAIN(7/8) SS

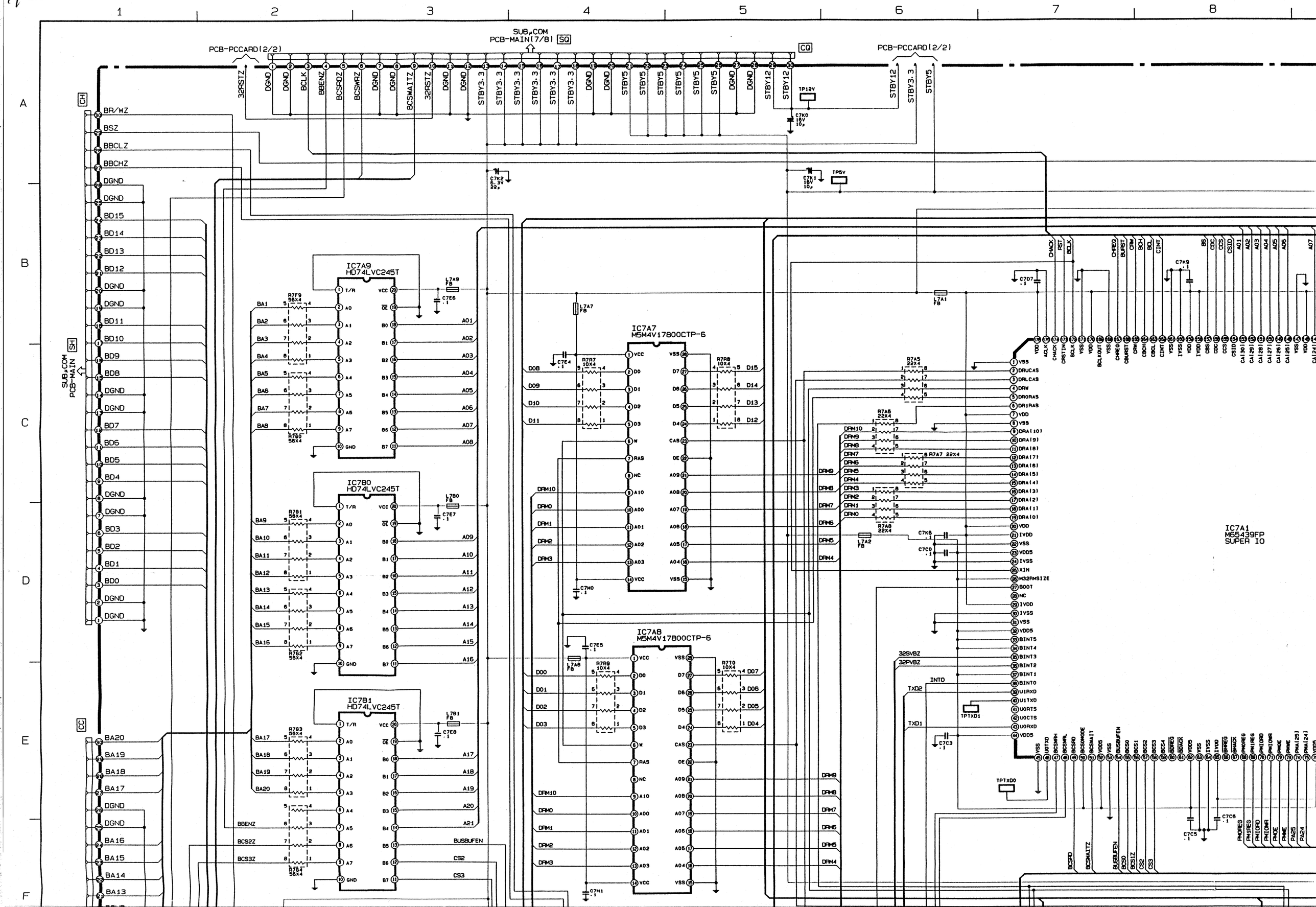
SUBμCOM
PCB-MAIN(7/8) SQ
PCB-PCCARD(2/2)
CQ
CH
SH
CC
SUBμCOM
PCB-MAIN
IC7A9
HD74LVC245T
IC7B0
HD74LVC245T
IC7B1
HD74LVC245T
IC7A7
M5M4V17800CTP-6
IC7A8
M5M4V17800CTP-6
IC7A1
M65439FP
SUPER IO
TP12V
TP5V
TPTXD1
TPTXD0
32SVBZ
32PVBZ
INTO
TXD2
TXD1
BR/WZ
BSZ
BBCLZ
BBCHZ
DGND
BD15
BD14
BD13
BD12
BD11
BD10
BD9
BD8
BD7
BD6
BD5
BD4
BD3
BD2
BD1
BD0
BA20
BA19
BA18
BA17
BA16
BA15
BA14
BA13
BBENZ
BCS2Z
BCS3Z
BUSBUFEN
CS2
CS3
32RSTZ
BCLK
BBENZ
BCSRDZ
BCSWRZ
BCSWAITZ
STBY3.3
STBY5
STBY12
DRUCAS
DRLCAS
DRW
DRORAS
DR1RAS
VDD
VSS
DRA(10)
DRA(9)
DRA(8)
DRA(7)
DRA(6)
DRA(5)
DRA(4)
DRA(3)
DRA(2)
DRA(1)
DRA(0)
IVDD
VDD5
IVSS
XIN
M32RMSIZE
BOOT
NC
BINT5
BINT4
BINT3
BINT2
BINT1
BINT0
U1RXD
U1TXD
U0RTS
U0CTS
U0RXD
VDD5
BCSRD
BCSWAITZ
BUSBUFEN
BCS0
BCS1Z
CS2
CS3
PMOREG
PM1REG
PM1ORD
PM1OWR
PMOE
PMWE
PA25
PA24

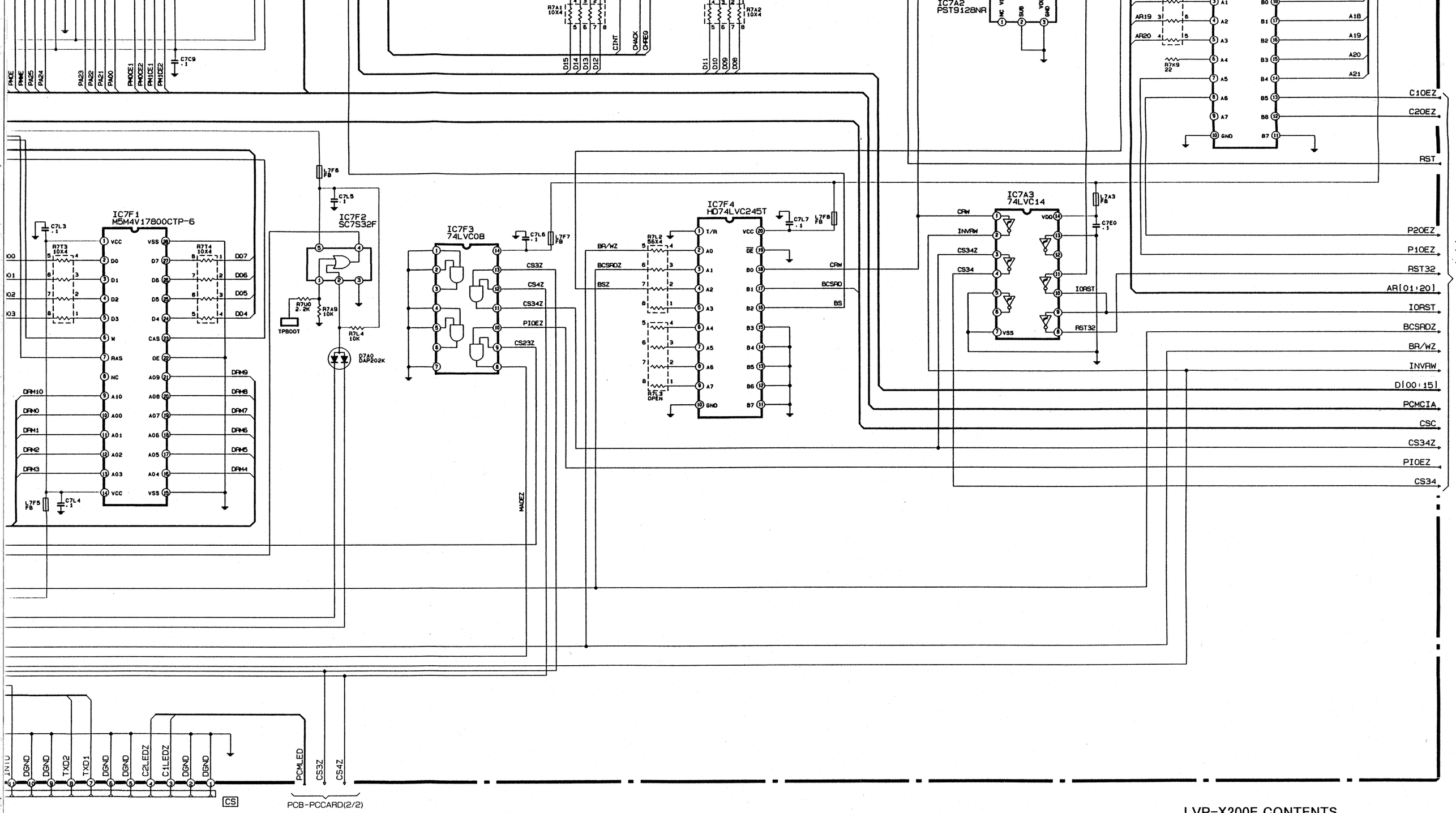

LVP-X200E CONTENTS

BLOCK DIAGRAM ·····	①	DECODER ·····	⑪
TERMINAL ·····	②	PCCARD (1/2) ·····	⑫
DRIVE (1/2)-MAIN (1/8) ·····	③	PCCARD (2/2) ·····	⑬
DRIVE (2/2)-MAIN (2/8) ·····	④	POWER, POWER SUB ·····	⑭
AD-MAIN (3/8) ·····	⑤	MOTOR, POWER SUB2 ·····	⑭
ASIC1-MAIN (4/8) ·····	⑥	L BOX, F BOX ·····	⑭
ASIC2-MAIN (5/8) ·····	⑦	PFC, INLET ·····	⑭
ASIC5-MAIN (6/8) ·····	⑧	FILTER ·····	⑭
SUB μ COM-MAIN (7/8) ·····	⑨	LAMP POWER, LP CONT ·····	⑮
PIO-MAIN (8/8) ·····	⑩	OPTION ·····	⑮

9 10 11 12 13 14 15 16

⚠ PCB-PCCARD (1/2)

TPGND

STBY3.3

IC7A0
M32000D4AFP
M32A/D

IC7A4
74ACT245MTC

IC7A5
74ACT245MTC

IC7A6
74ACT245MTC

IC7A2
PST9128NR

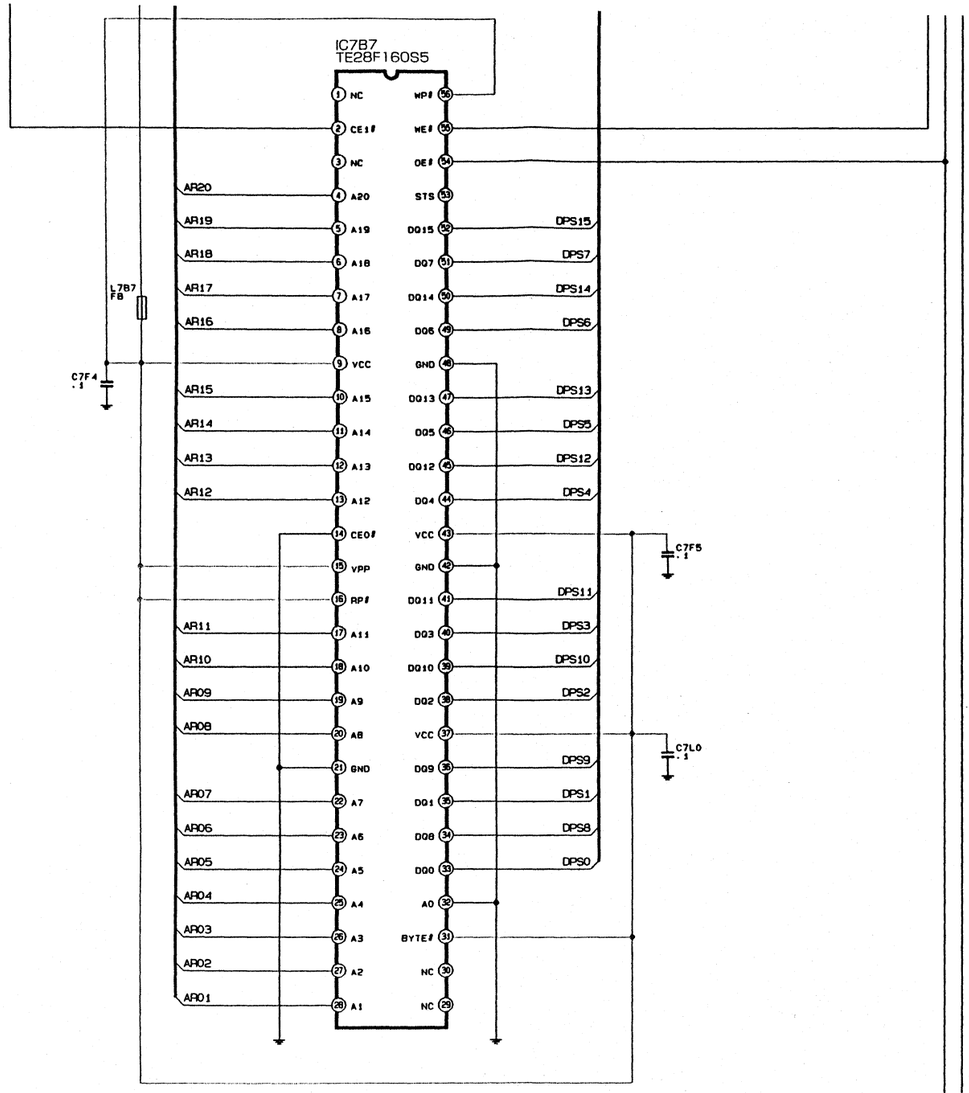

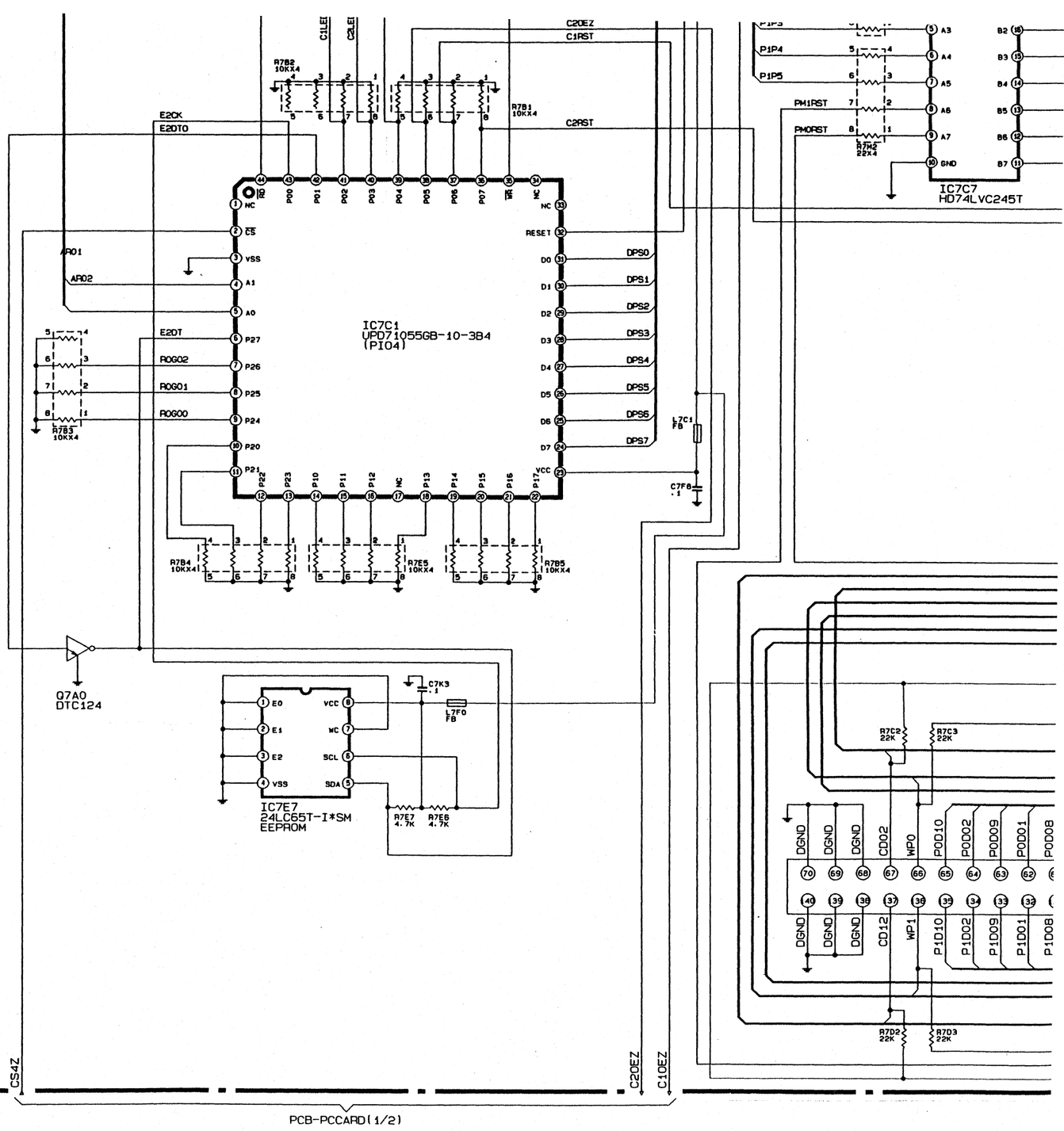

BCSRDZ
IORST
PCMLED

PCB-PCCARD(1/2)

PCB-PCCARD(1/2)

LVP-X200E CONTENTS

BLOCK DIAGRAM	①	DECODER	⑪
TERMINAL	②	PCCARD (1/2)	⑫
DRIVE (1/2)-MAIN (1/8)	③	PCCARD (2/2)	⑬
DRIVE (2/2)-MAIN (2/8)	④	POWER, POWER SUB	⑭
AD-MAIN (3/8)	⑤	MOTOR, POWER SUB2	⑭
ASIC1-MAIN (4/8)	⑥	L BOX, F BOX	⑭
ASIC2-MAIN (5/8)	⑦	PFC, INLET	⑭
ASIC5-MAIN (6/8)	⑧	FILTER	⑭
SUB μ COM-MAIN (7/8)	⑨	LAMP POWER, LP CONT	⑮
PIO-MAIN (8/8)	⑩	OPTION	⑮

13

1 2 3 4 5 6 7 8

A B C D E F

PCB-PCCARD(1/2)

CS3Z

AR[01:20]
BR/WZ
STBY3.3
STBY12
STBY5
PCMCIA
D[00:15]
CSC
BCS1Z
BCS0
CS34Z
INVRW
BCSWRZ
RPOEZ

IC7C3
74LVC08
C7C0 .1
L7C3 FB
PMDEN
PMSWDEN

IC7B5
HD74LVC245T
C7F2 .1
L7B5 FB
R7H8 10X4
R7H4 10X4
R7H9 10X4
R7H5 10X4
DD00 DD01 DD02 DD03 DD04 DD05 DD06 DD07
DR00 DR01 DR02 DR03 DR04 DR05 DR06 DR07

IC7B6
HD74LVC245T
C7F3 .1
L7B6 FB
R7J1 10X4
R7H7 10X4
R7J0 10X4
R7H6 10X4
DD08 DD09 DD10 DD11 DD12 DD13 DD14 DD15
DR08 DR09 DR10 DR11 DR12 DR13 DR14 DR15

R7B6 10KX4
R7B7 10KX4
R7B8 10KX4
R7B9 10KX4
P0P0 P0P1 P0P2 P0P3 P0P4 P0P5
P1P0 P1P1 P1P2 P1P3 P1P4 P1P5

IC7C2
UPD71055GB-10-3B4
(PI03)
NC CS VSS A1 A0 P27 P26 P25 P24 P20 P21
PD0 PD1 PD2 PD3 PD4 PD5 PD6 PD7 RD NC
RESET D0 D1 D2 D3 D4 D5 D6 D7 VCC
WR P22 P23 P10 P11 P12 NC P13 P14 P15 P16 P17
AR02 AR01 BVPP BVPC BVC5 BVC3 AVC3 AVC5
AVPC AVPP
L7C2 FB
C7F9 .1
DPS0 DPS1 DPS2 DPS3 DPS4 DPS5 DPS6 DPS7

IC7C5
HD74LVC245T
R7L5 22X4
R7L6 22X4

IC7E9
HD74LVC245T
R7L7 22X4
R7L8 22X4
DPS8 DPS9 DPS10 DPS11 DPS12 DPS13 DPS14 DPS15

IC7C6
HD74LVC245T
R7L9 22X4
R7H0 22X4
P0P0 P0P1 P0P2 P0P3 P0P4 P0P5

IC7E8
HD74LVC245T
R7M1 22X4
R7M0 22X4
P1P0 P1P1 P1P2

T/R A0 A1 A2 A3 A4 A5 A6 A7 GND
VCC OE B0 B1 B2 B3 B4 B5 B6 B7

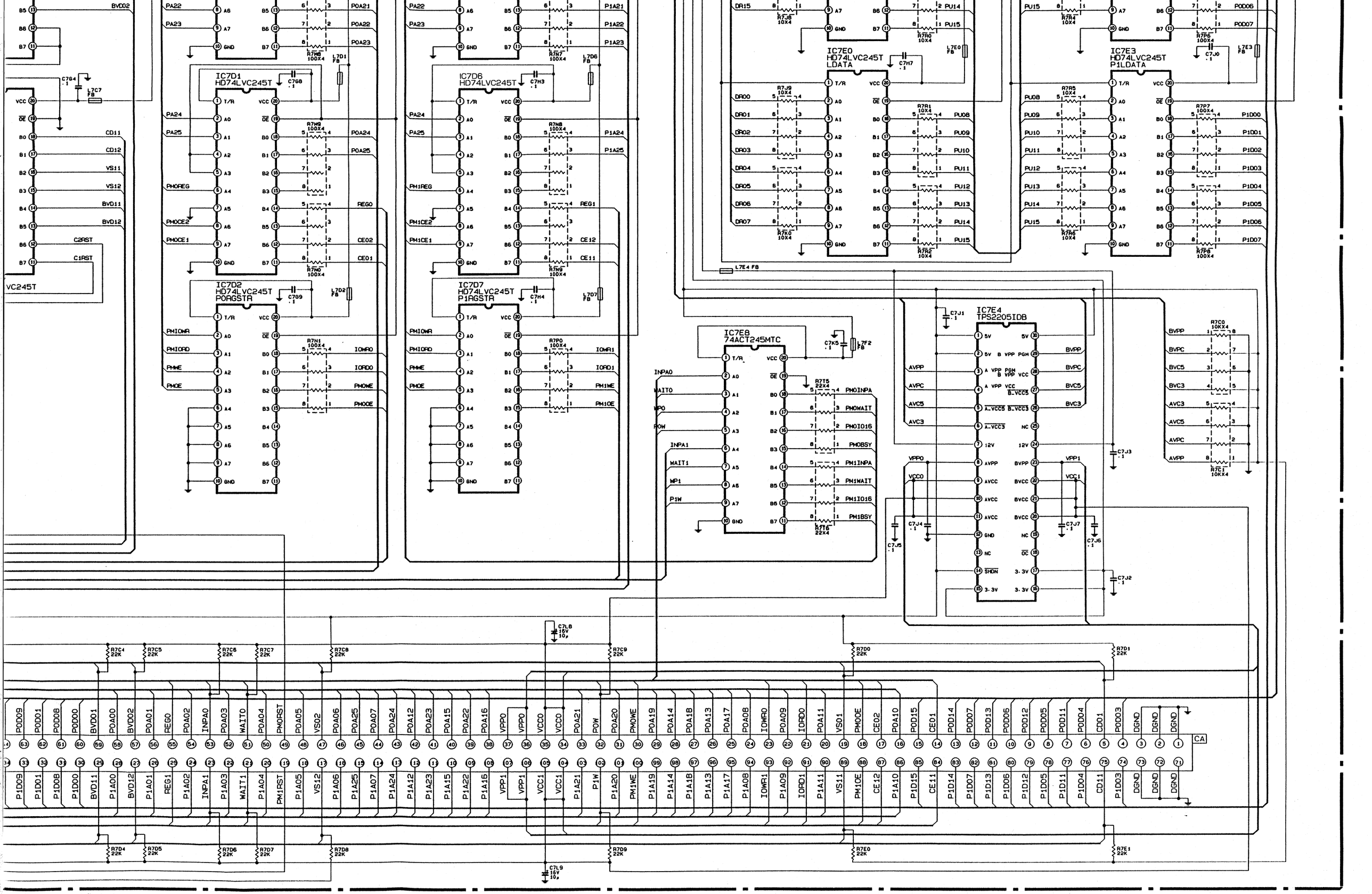
IC7D1
HD74LVC245T
IC7D6
HD74LVC245T
IC7D2
HD74LVC245T
P0RGSTR
IC7D7
HD74LVC245T
P1RGSTR
IC7E0
HD74LVC245T
LDATA
IC7E3
HD74LVC245T
P1LDATA
IC7E8
74ACT245MTC
IC7E4
TPS2205IDB
CA

⚠ PCB-PCCARD (2/2)

PCB-PCCARD(1/2)

P10EZ

P20EZ

PCB-PCCARD(1/2)

RST

RST32

32RSTZ

CS34

P10EZ

IC7C8 HD74LVC245T

IC7D3 HD74LVC245T

IC7E1 HD74LVC245T POUDARTA

IC7E5 74LVC08

IC7C9 HD74LVC245T

IC7D4 HD74LVC245T

IC7D8 HD74LVC245T P1UDATA

IC7E6 74LVC32

IC7D0 HD74LVC245T

IC7D5 HD74LVC245T

IC7D9 HD74LVC245T SWDATA

IC7E2 HD74LVC245T POLDATA

IC7E0 HD74LVC245T LDATA

IC7E3 HD74LVC245T P1LDATA

RPOEZ

CD01

CD02

VS01

VS02

BVD01

BVD02

CS34

BCS1Z

PIOEZ

PMDEN

PMDDIR

PMSWDEN

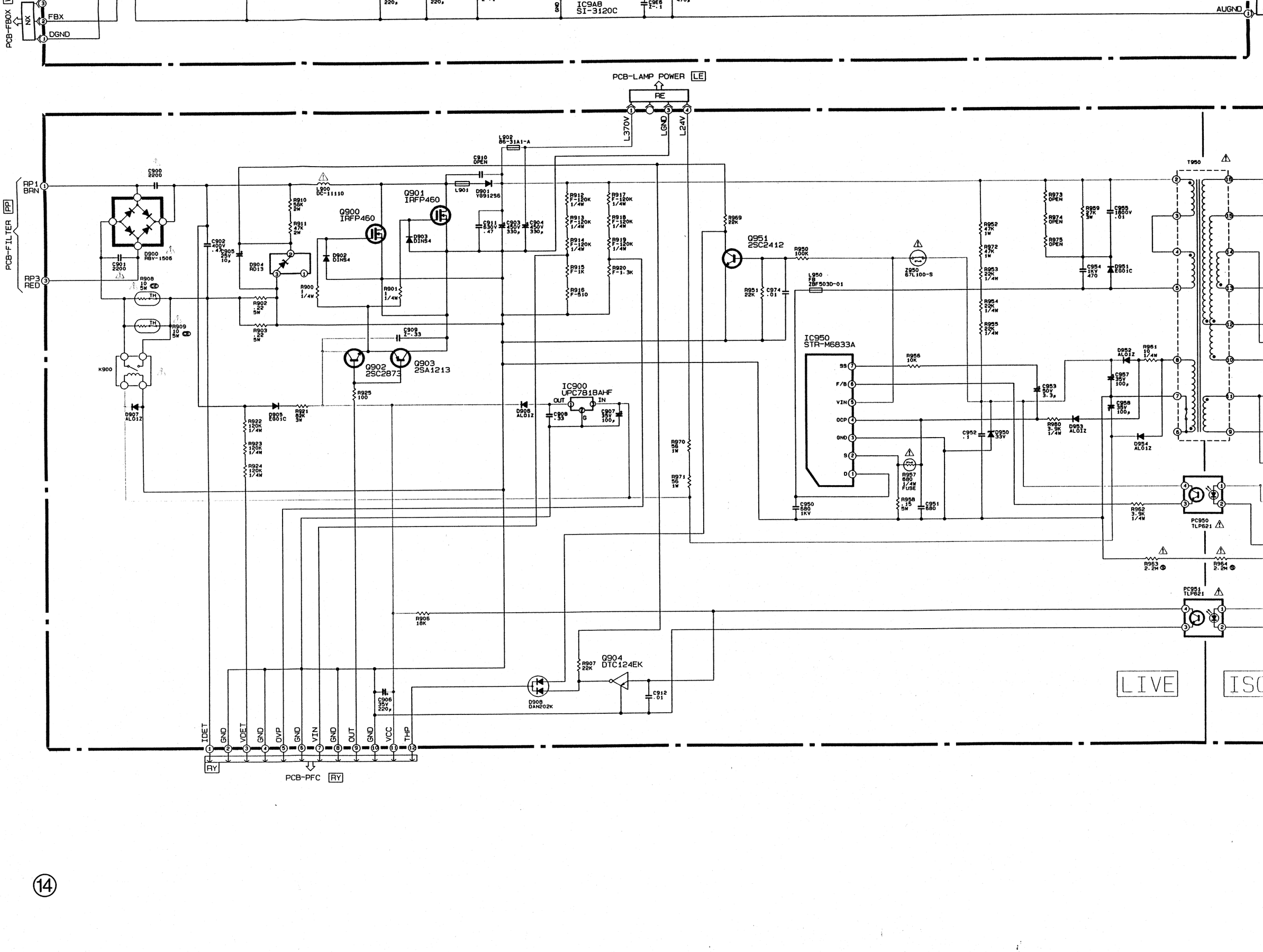
PCB-FBOX
NX
FBX
DGND
IC9A8
SI-3120C
AUGND
PCB-LAMP POWER LE
RE
L370V
LGND
L24V
PCB-FILTER PP
RP1 BRN
RP3 RED
C900 2200
D900 RBV-1506
C901 2200
R908 10 5W
R909 10 5W
K900
D907 AL01Z
C902 400V .47
C905 25V 10μ
R910 56K 2W
R911 47K 2W
L900 DC-11110
D904 RD13
R902 .22 5W
R903 .22 5W
Q900 IRFP460
D902 DIN54
R900 1 1/4W
R901 1 1/4W
L902 86-31A1-A
C910 OPEN
L901
D901 V091Z56
Q901 IRFP460
D903 DIN54
C911 630V .47
C903 450V 330μ
C904 450V 330μ
R912 F-120K 1/4W
R913 F-120K 1/4W
R914 F-120K 1/4W
R915 F-1K
R916 F-510
R917 F-120K 1/4W
R918 F-120K 1/4W
R919 F-120K 1/4W
R920 F-1.3K
C909 Z-.33
Q902 2SC2873
Q903 2SA1213
R925 100
D905 E01C
R921 62K 3W
R922 120K 1/4W
R923 120K 1/4W
R924 120K 1/4W
D906 AL01Z
IC900 UPC7818AHF
OUT
IN
G
C908 .33
C907 35V 100μ
R969 22K
Q951 2SC2412
R950 100K
R951 22K
C974 .01
L950 FB 2BF503D-01
Z950 67L100-S
R952 47K 1W
R972 47K 1W
R953 22K 1/4W
R954 22K 1/4W
R955 22K 1/4W
R973 OPEN
R974 OPEN
R975 OPEN
R959 47K 3W
C955 1600V .01
C954 1KV 470
D951 EG01C
T950
IC950 STR-M6833A
SS
F/B
VIN
OCP
GND
S
D
R956 10K
C953 50V 3.3μ
R960 3.9K 1/4W
D953 AL01Z
D952 AL01Z
R961 10 1/4W
C957 35V 100μ
C958 35V 100μ
D954 AL01Z
C952 .1
D950 33V
R957 680 1/4W FUSE
R958 .15 5W
C950 680 1KV
C951 680
R962 3.9K 1/4W
PC950 TLP621
R963 2.2M
R964 2.2M
PC951 TLP621
R970 56 1W
R971 56 1W
R906 18K
Q904 DTC124EK
R907 22K
D908 DAN202K
C912 .01
C906 35V 220μ
LIVE
IDET
GND
VDET
GND
OVP
GND
VIN
GND
OUT
GND
VCC
THP
RY
PCB-PFC RY

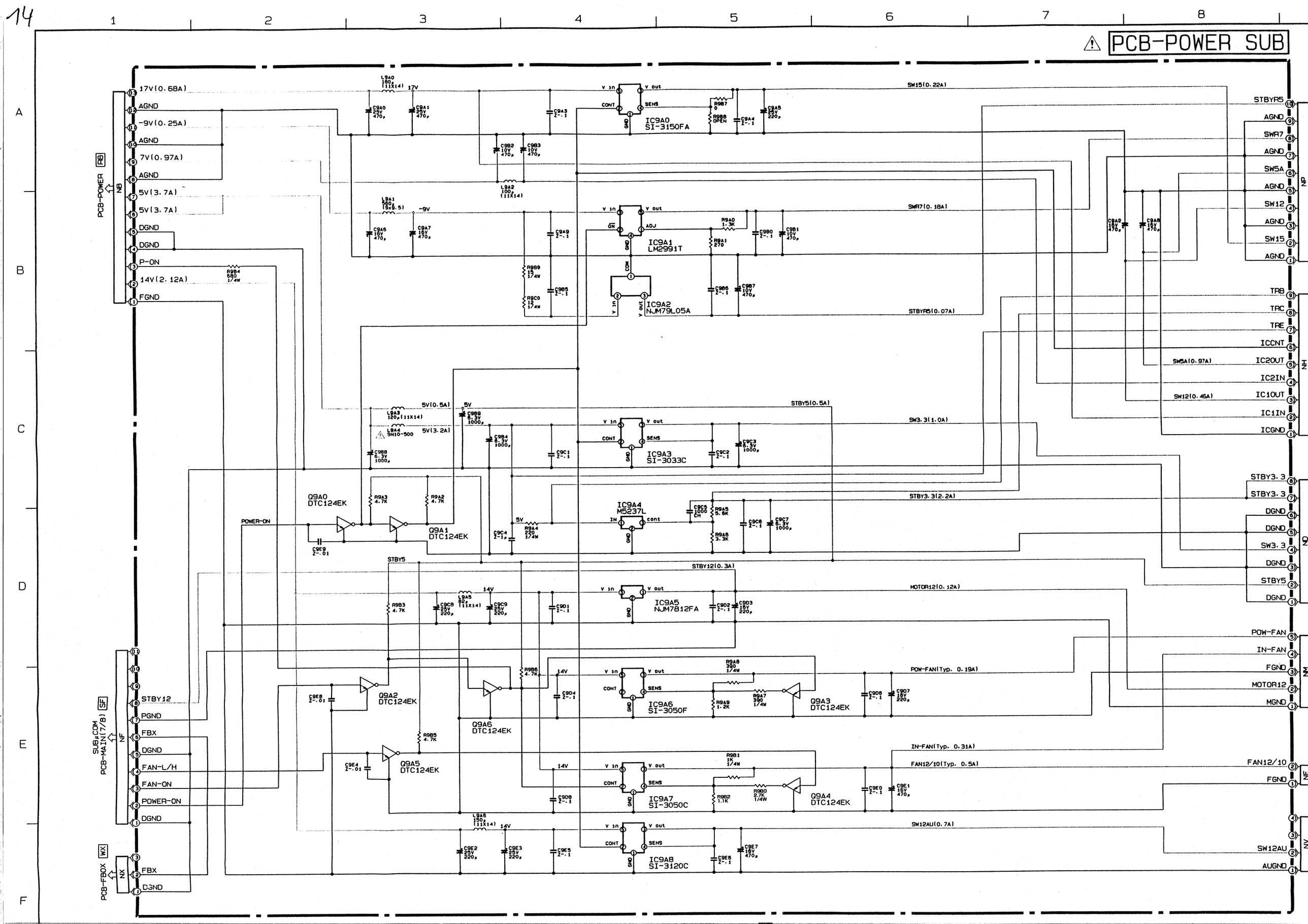
PCB-POWER SUB
PCB-POWER
17V(0.68A)
AGND
-9V(0.25A)
AGND
7V(0.97A)
AGND
5V(3.7A)
5V(3.7A)
DGND
DGND
P-ON
14V(2.12A)
FGND
IC9A0
SI-3150FA
IC9A1
LM2991T
IC9A2
NJM79L05A
IC9A3
SI-3033C
IC9A4
M5237L
IC9A5
NJM7812FA
IC9A6
SI-3050F
IC9A7
SI-3050C
IC9A8
SI-3120C
Q9A0
DTC124EK
Q9A1
DTC124EK
Q9A2
DTC124EK
Q9A3
DTC124EK
Q9A4
DTC124EK
Q9A5
DTC124EK
Q9A6
DTC124EK
POWER-ON
SW15(0.22A)
SW7(0.18A)
STBYR5(0.07A)
STBY5(0.5A)
SW3.3(1.0A)
STBY3.3(2.2A)
STBY12(0.3A)
MOTOR12(0.12A)
POW-FAN(Typ. 0.19A)
IN-FAN(Typ. 0.31A)
FAN12/10(Typ. 0.5A)
SW12AU(0.7A)
STBYR5
AGND
SWR7
AGND
SW5A
AGND
SW12
AGND
SW15
AGND
TRB
TRC
TRE
ICCNT
IC2OUT
IC2IN
IC1OUT
IC1IN
ICGND
SW5A(0.97A)
SW12(0.46A)
STBY3.3
STBY3.3
DGND
DGND
SW3.3
DGND
STBY5
DGND
POW-FAN
IN-FAN
FGND
MOTOR12
MGND
FAN12/10
FGND
SW12AU
AUGND
SUBμCOM
PCB-MAIN(7/8)
STBY12
PGND
FBX
DGND
FAN-L/H
FAN-ON
POWER-ON
DGND
PCB-FBOX
FBX
DGND

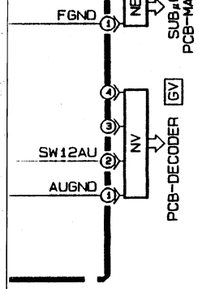

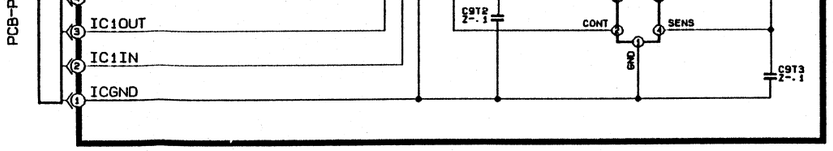

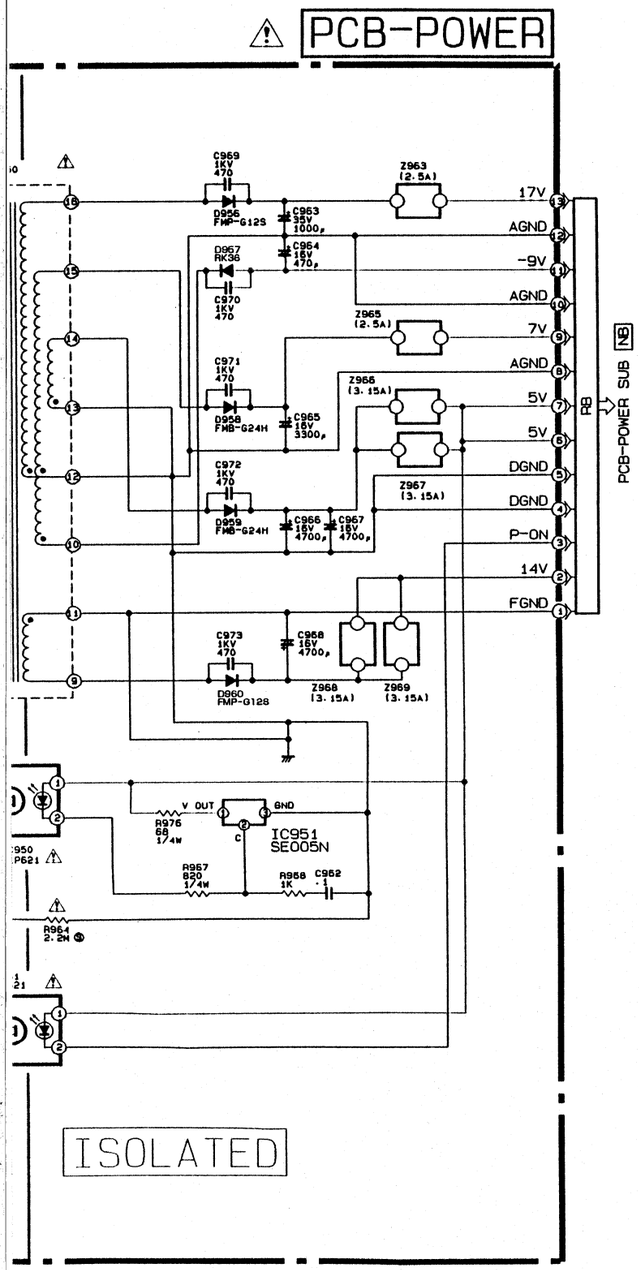

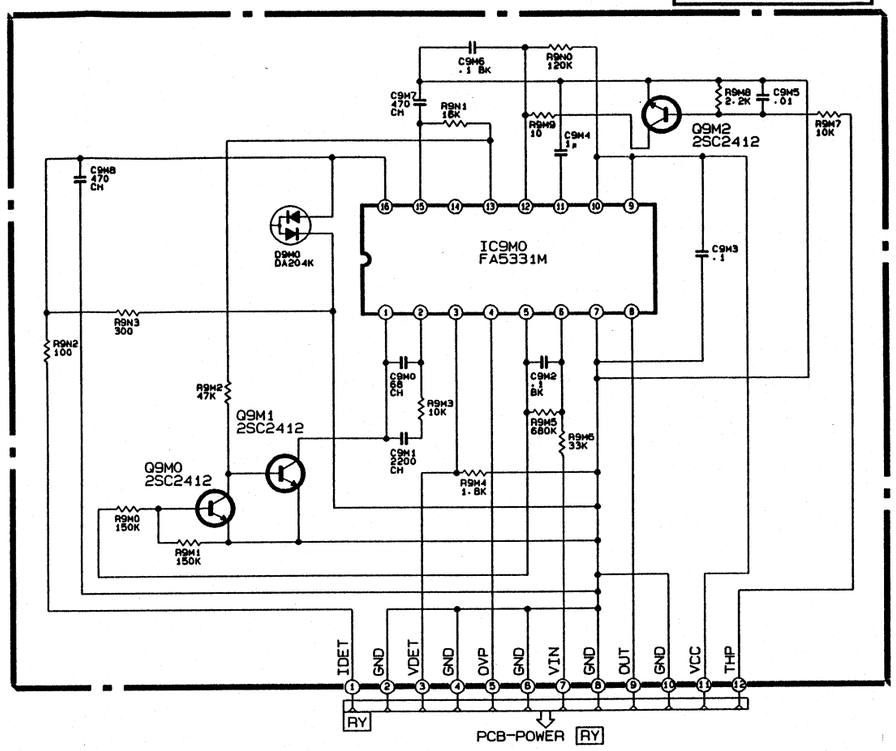

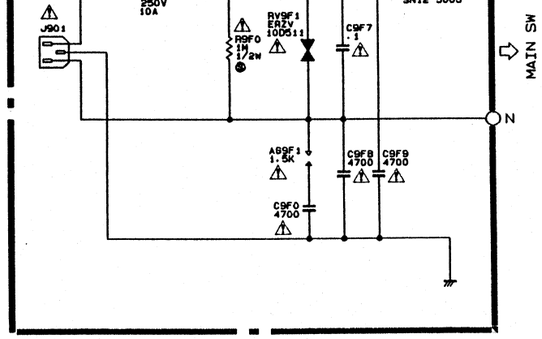

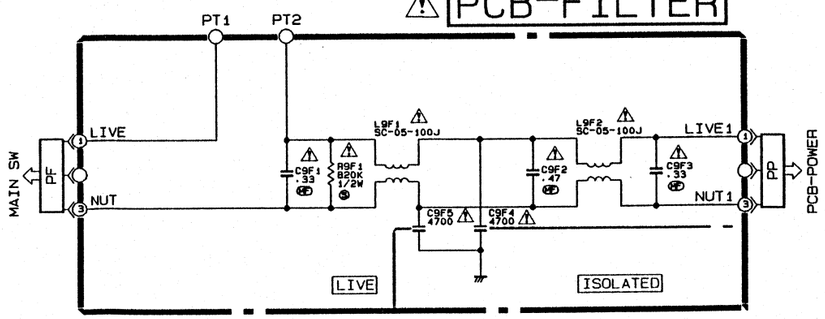

ISOLATED

LVP-X200E CONTENTS

BLOCK DIAGRAM	①	DECODER	⑪
TERMINAL	②	PCCARD (1/2)	⑫
DRIVE (1/2)-MAIN (1/8)	③	PCCARD (2/2)	⑬
DRIVE (2/2)-MAIN (2/8)	④	POWER, POWER SUB	⑭
AD-MAIN (3/8)	⑤	MOTOR, POWER SUB2	⑭
ASIC1-MAIN (4/8)	⑥	L BOX, F BOX	⑭
ASIC2-MAIN (5/8)	⑦	PFC, INLET	⑭
ASIC5-MAIN (6/8)	⑧	FILTER	⑭
SUB μ COM-MAIN (7/8)	⑨	LAMP POWER, LP CONT	⑮
PIO-MAIN (8/8)	⑩	OPTION	⑮

9 10 11 12 13 14 15 16

SUB

STBYR5 10
AGND 9
SWR7 8
AGND 7
SW5A 6
AGND 5
SW12 4
AGND 3
SW15 2
AGND 1
NP → SUB&COM PCB-MAIN(7/8) SP

TRB 9
TRC 8
TRE 7
ICCNT 6
IC2OUT 5
IC2IN 4
IC1OUT 3
IC1IN 2
ICGND 1
NH → PCB-POWER SUB2 XH

STBY3.3 8
STBY3.3 7
DGND 6
DGND 5
SW3.3 4
DGND 3
STBY5 2
DGND 1
ND → SUB&COM PCB-MAIN(7/8) SD

POW-FAN 5
IN-FAN 4
FGND 3
MOTOR12 2
MGND 1
NM → PCB-MOTOR MM

FAN12/10 2
FGND 1
NE → SUB&COM PCB-MAIN(7/8) SE

4
GV

⚠ PCB-MOTOR

PCB-POWER SUB NM
POW-FAN 5
IN-FAN 4
FGND 3
MOTOR12 2
MGND 1

IC950
LB1641
FOCUS MOTOR DRIVE

IC951
LB1641
ZOOM MOTOR DRIVE

C950 16V 470μ
C953 2-.01
C951 2-.01
C954 2-.01
C956 2-.01
C952 16V 470μ
C955 16V 470μ
R950 1K
R956 1K
D950 5.1V
D951 5.1V
R951 120
R952 120
R953 120
R954 120
R955 120
R957 120
R958 120
R959 120
R960 120
R961 120
R962 100
R963 100
R964 100
R965 100
R966 0

FOCUS2 6
FOCUS1 5
ZOOM2 4
ZOOM1 3
MGND 2
MOTOR 1
MA

POW-FLK 4
POW-FAN 3
FGND 2
1
MP → POWER FAN(S)

IN-FLK 3
IN-FAN 2
FGND 1
MK → IN FAN(L)

POW-FLK 8
IN-FLK 7
MGND 6
ZOOM- 5
ZOOM+ 4
FOCUS- 3
FOCUS+ 2
MGND 1
MV → PIO PCB-MAIN(8/8) SV

⚠ PCB-POWER SUB2

PCB-POWER SUB NH
TRB 9
TRC 8
TRE 7
ICCNT 6
IC2OUT 5
IC2IN 4
IC1OUT 3
IC1IN 2
ICGND 1
XH

Q980
2SA1470S (2.2A)

IC980
SI-3120FA
SW12(0.46A)
V in
V out
CONT
SENS
GND
C970 2-.1
C971 2-.1

IC981
SI-3050C
SW5A(0.97A)
C972 2-.1
C973 2-.1

⚠ PCB-LBOX

S9E1
DGND 1
LBX 2
EN → SUB&COM PCB-MAIN(7/8) SN

⚠ PCB-FBOX

S9W1
DGND 1
FBX 2
3
WX → PCB-POWER SUB NX

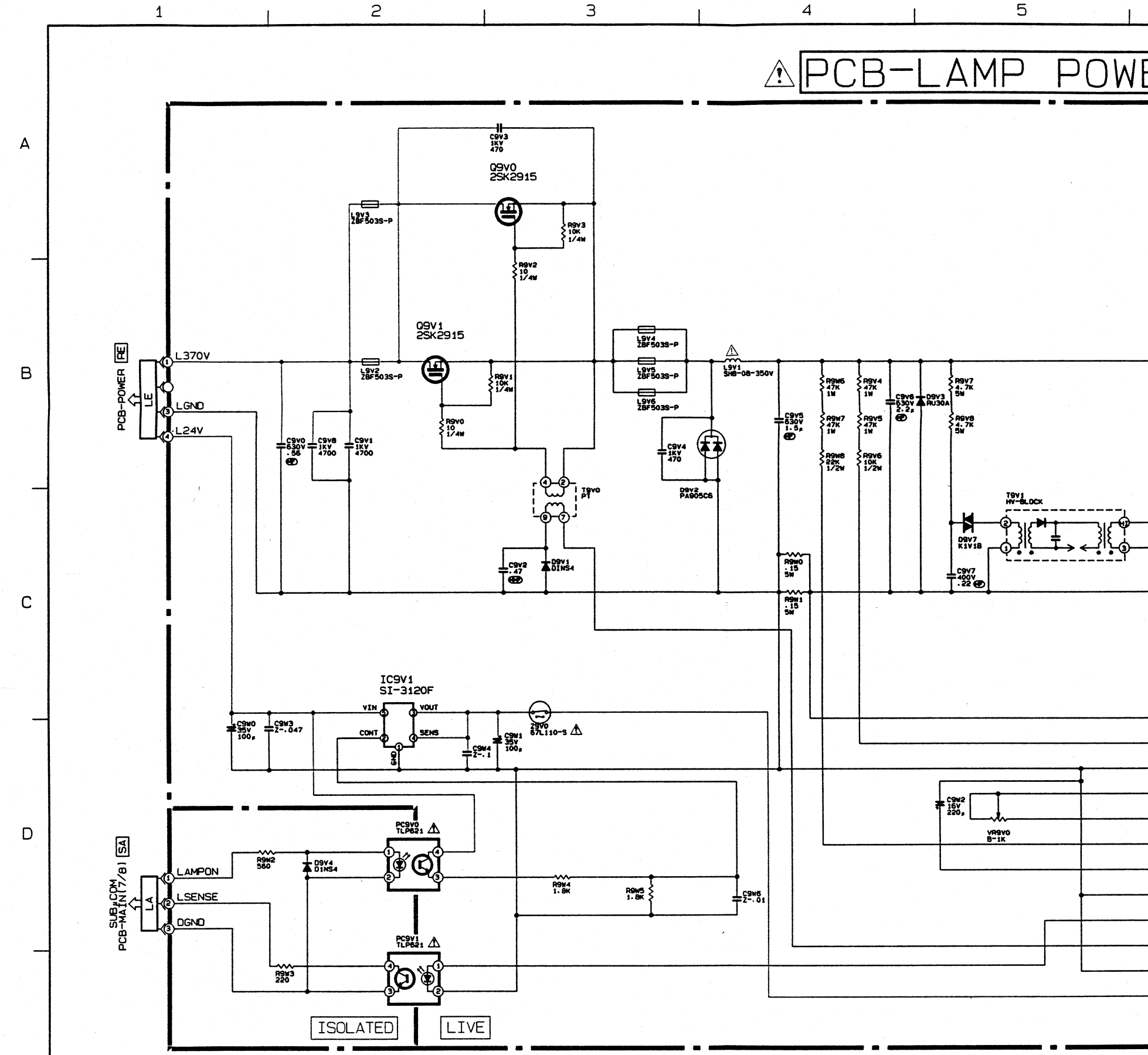

LVP-X200E CONTENTS

BLOCK DIAGRAM	①	DECODER	⑪
TERMINAL	②	PCCARD (1/2)	⑫
DRIVE (1/2)-MAIN (1/8)	③	PCCARD (2/2)	⑬
DRIVE (2/2)-MAIN (2/8)	④	POWER, POWER SUB	⑭
AD-MAIN (3/8)	⑤	MOTOR, POWER SUB2	⑭
ASIC1-MAIN (4/8)	⑥	L BOX, F BOX	⑭
ASIC2-MAIN (5/8)	⑦	PFC, INLET	⑭
ASIC5-MAIN (6/8)	⑧	FILTER	⑭
SUB μ COM-MAIN (7/8)	⑨	LAMP POWER, LP CONT	⑮
PIO-MAIN (8/8)	⑩	OPTION	⑮

5 | 6 | 7 | 8 | 9 | 10

MP POWER

PCE

T9V1
HV-BLOCK

LAMP
LAMP-SOCKET

I-LA
V-LA
GND
VR-
VR+
OVPS
C
GND
LAMPS
DRIVE
GND
VCC

LB

VR9V0
B-1K

Q9X0
2SC2873

Q9X1
2SA1213

D9X1
MA728

C9X8
Z-.33

R9Z5
100K

VCC

R9Z6
0

R9Z7
0

R9Y0
24K

R9Y1
20K

C9Y3
Z-.1

C9Y0
Z-.1

C9X6
Z-.1

R9Z8
0

R9Y3
47K

Q9X4
2SC2

R9Y2
22K

R9X8
100

R9X9
OPEN

C9X7
470
CM

IC9X0
MB3769APF

R9Y8
2.7K

C9X5
Z-.1

R9Y6
6.8K

D9X3
OPEN

D9X2
RD8.2MB1

R9Y7
47K

Q9X3
2SC2412

C9X0
B-1μ

R9X0
22K

R9X1
27K

C9X2
680
CM

R9X2
30K

R9Z4
5.6K

R9X7
2.4K

R9X6
15K

C9X3
B-1μ

R9X5
1M

R9Z2
22K

R9Y5
150

C9Z1
OPEN

C9Z2
OPEN

D9X4
DAN202K

D9X0
RD9.1MB2

R9X3
680

C9X4
Z-.01

R9X4
10K

C9X9
Z-.01

Q9X7
DTC124EK

C9Y2
Z-.1

R9Y4
1.2K

Q9X5
2SC2412

4 5 6 7 8 9

⚠ PCB-LAMP POWER

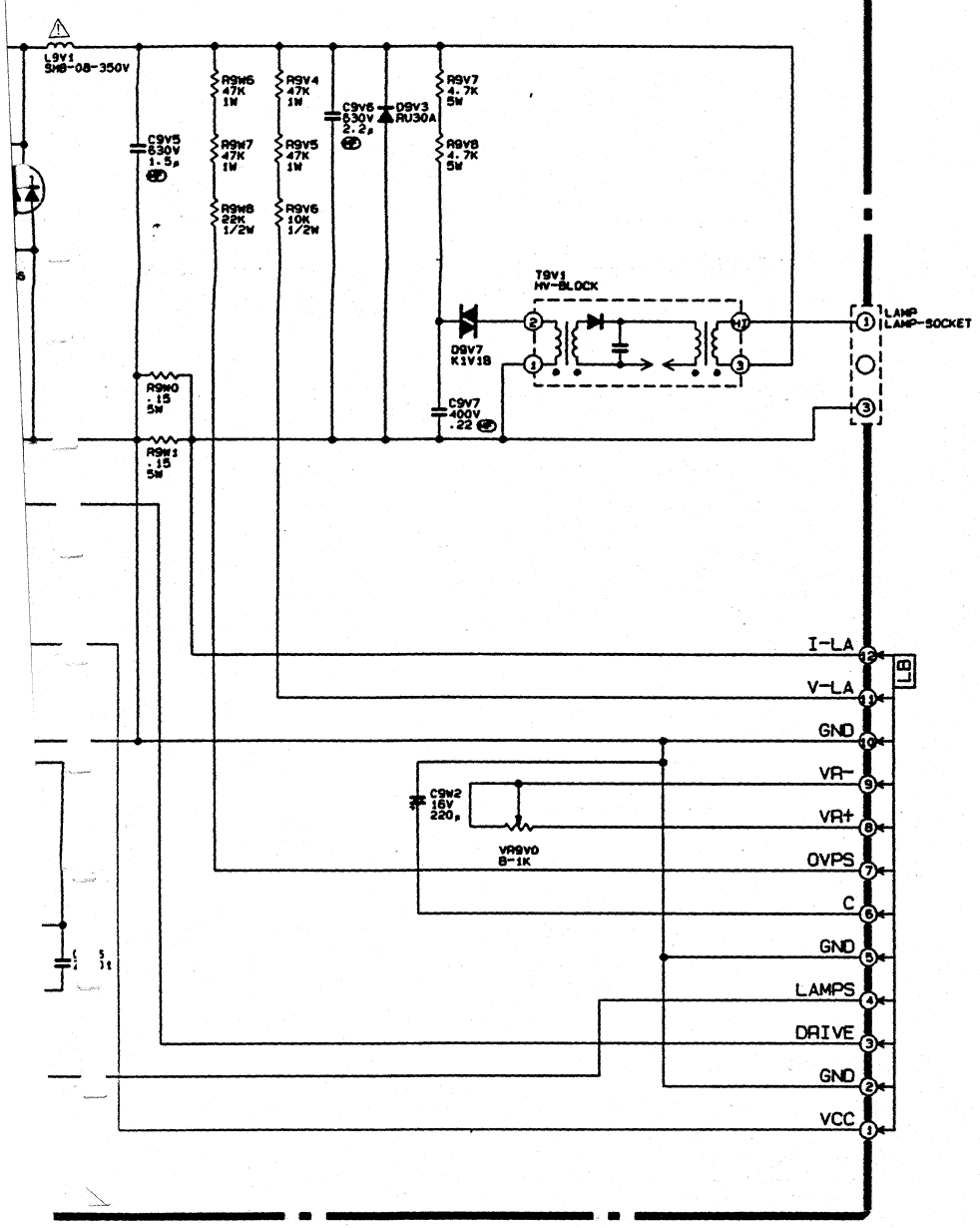

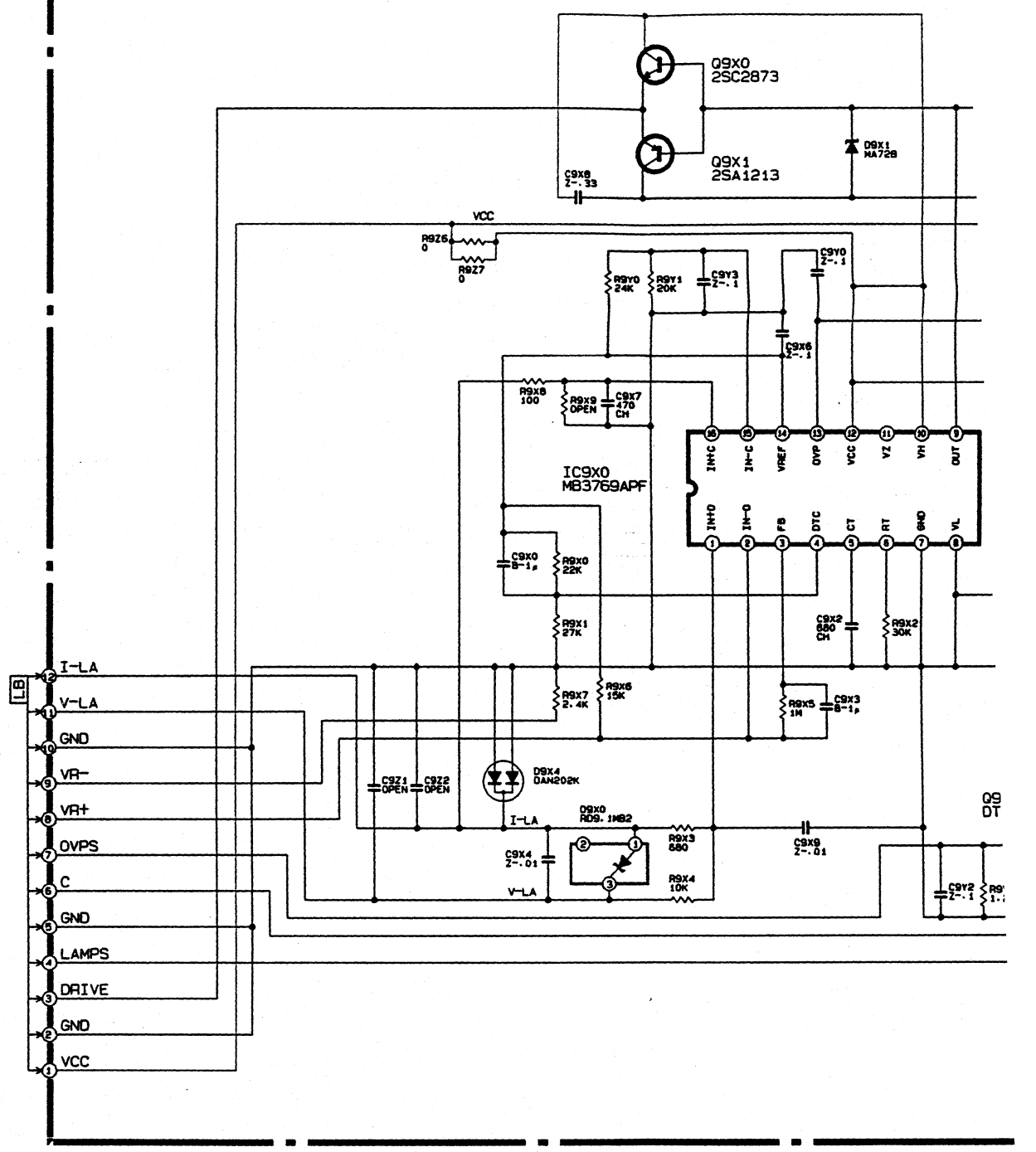

10 11 12 13 14 15

⚠PCB-LP CONT

(VB-X200E) ⚠PCB-OPTION

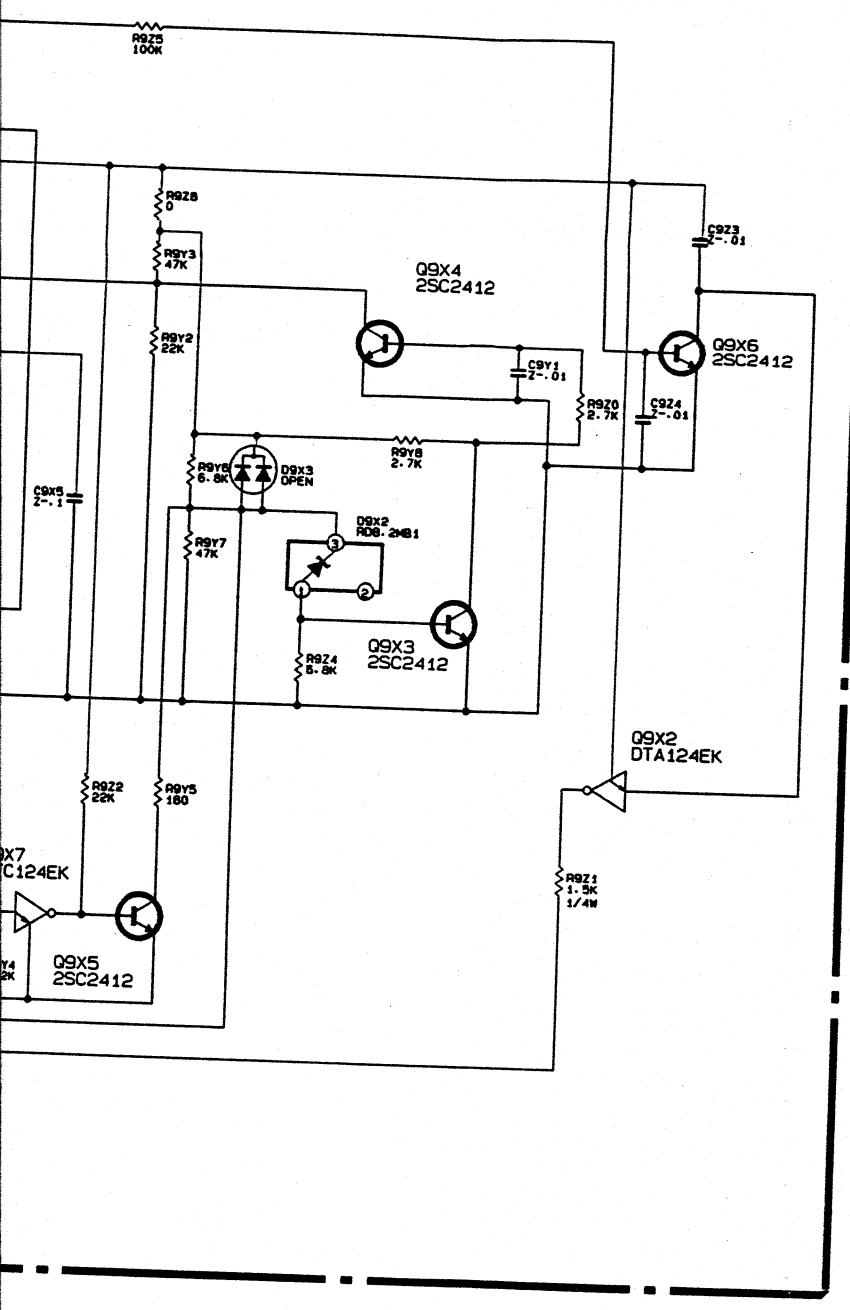

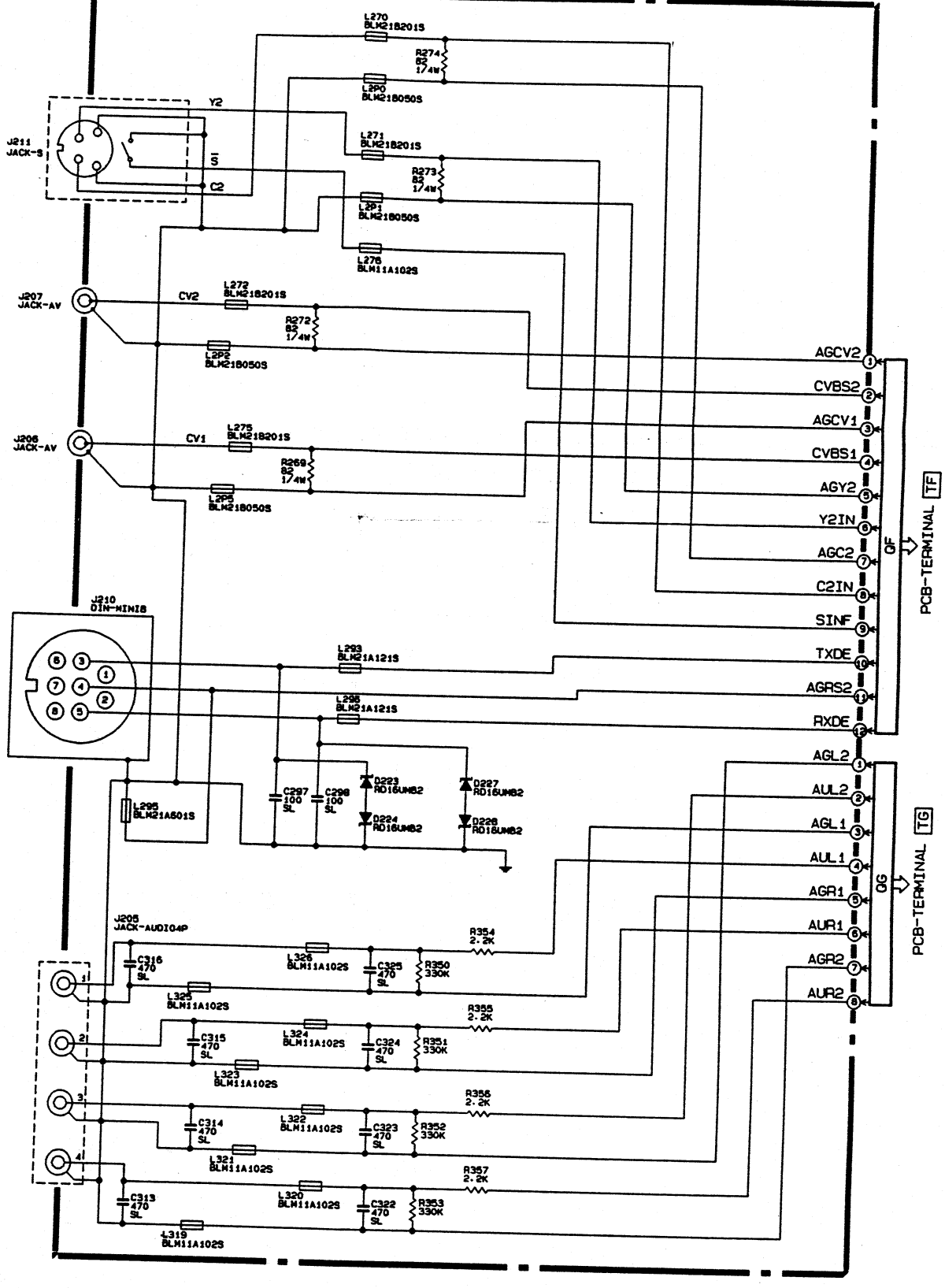

PCB-POWER (COMPONENT SIDE)

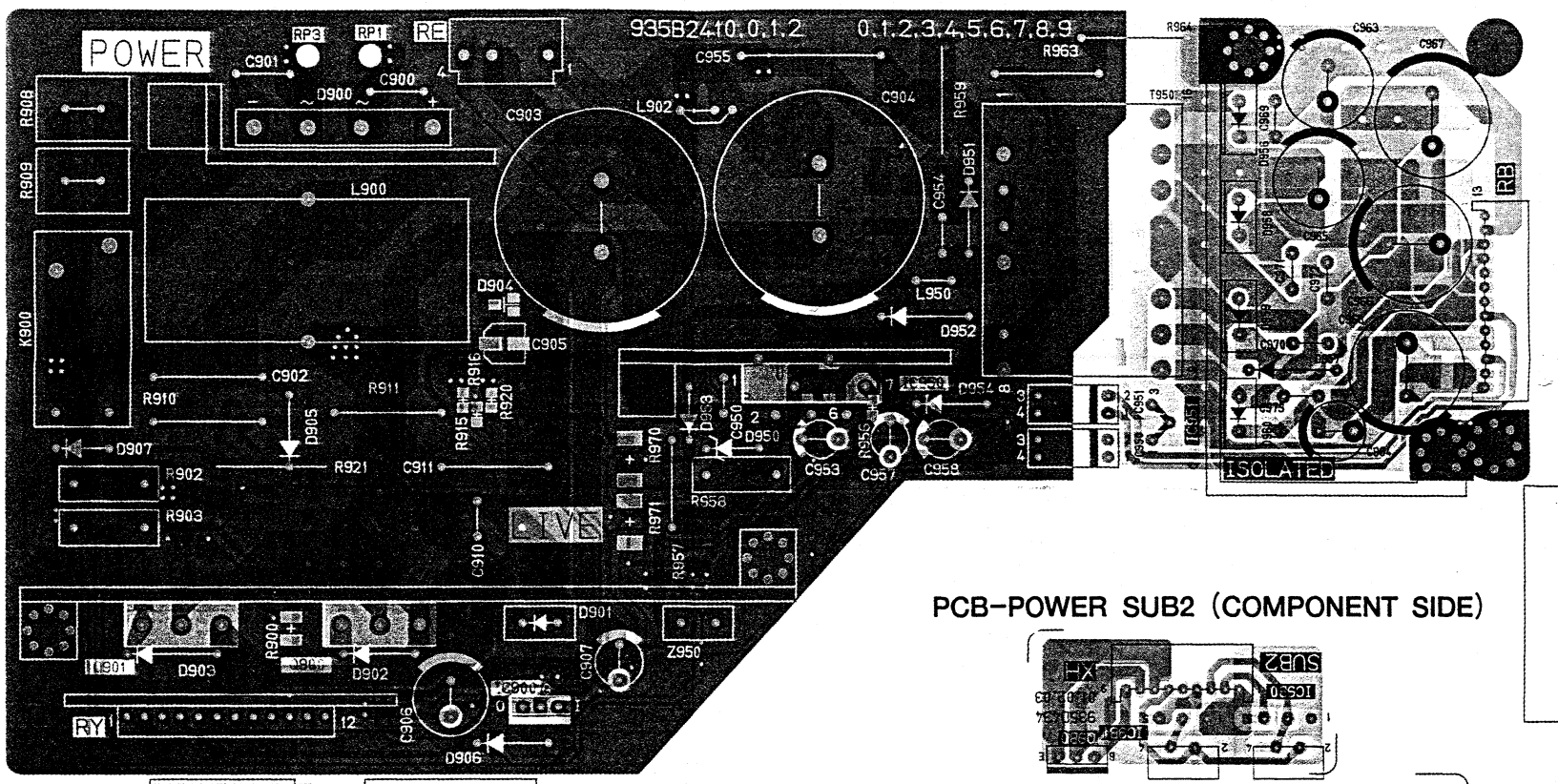

PCB-POWER SUB2 (COMPONENT SIDE)

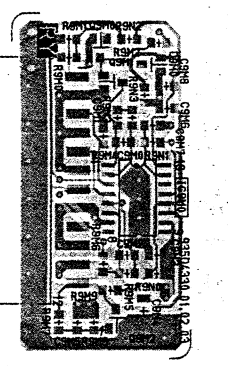

PCB-PFC (COMPONENT SIDE)

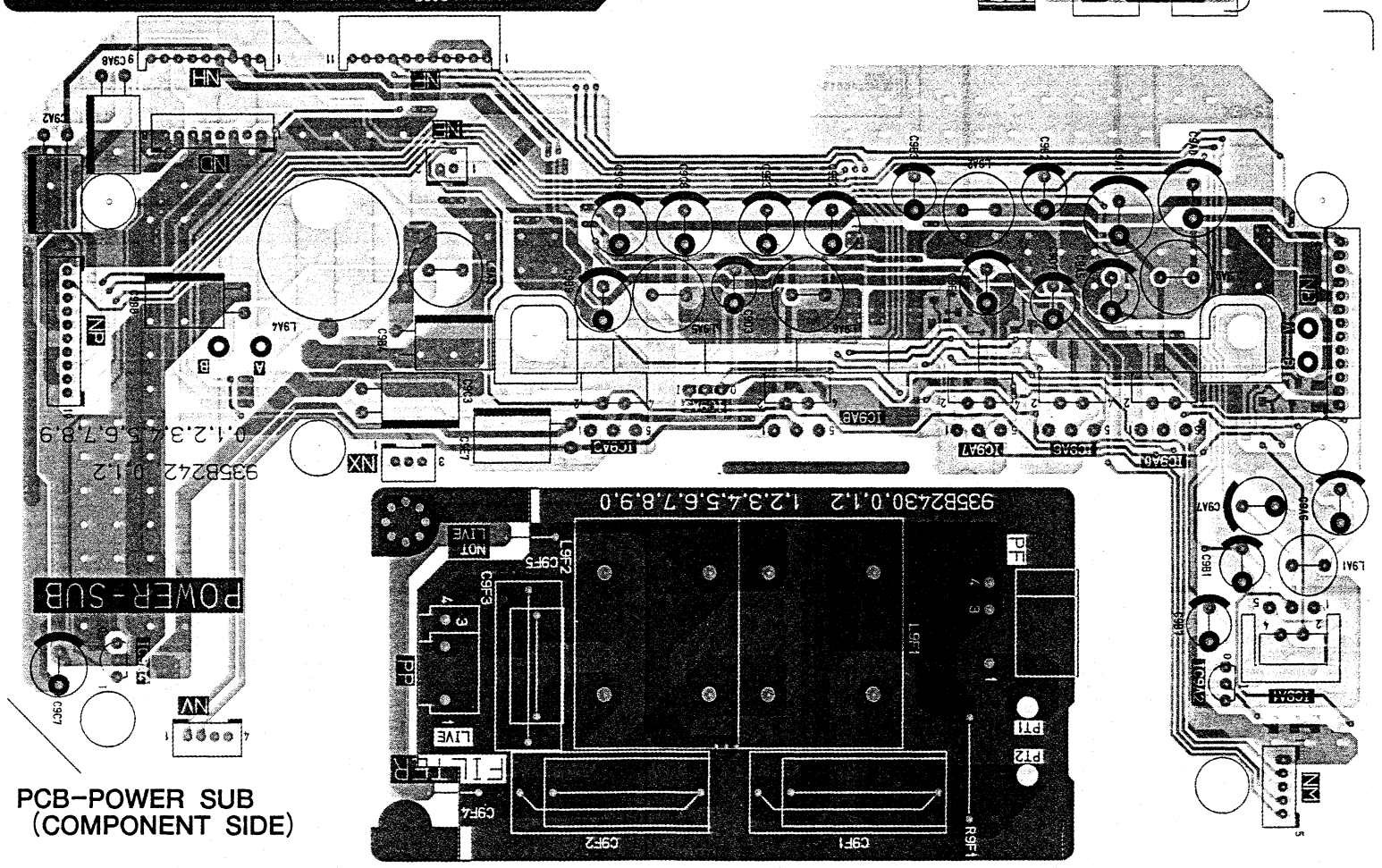

PCB-POWER SUB (COMPONENT SIDE)

PCB-FILTER (COMPONENT SIDE)

SYMBOL NO.	ADDRESS
A	D−1
A	D−4
B	D−4
B	D−1
C900	A−2
C901	A−1
C902	B−1
C903	A−2
C904	A−3
C905	B−2
C906	C−2
C907	C−2
C910	B−2
C911	B−2
C950	B−3
C953	B−3
C954	A−3
C955	A−3
C957	B−3
C958	B−3
C963	A−4
C964	B−4
C965	A−4
C966	A−5
C967	A−5
C968	B−5
C969	A−4
C970	B−4
C971	B−4
C972	B−4
C973	B−4
C9A0	D−4
C9A1	D−4
C9A2	C−1
C9A5	D−4
C9A6	D−5
C9A7	D−4
C9A8	C−1
C9B1	E−4
C9B2	D−4
C9B3	D−3
C9B4	D−2
C9B7	E−4
C9B8	D−1
C9B9	D−2
C9C3	D−2
C9C7	E−1
C9C8	D−3
C9C9	D−2
C9D3	D−3
C9D7	D−4
C9E1	D−4
C9E2	D−3
C9E3	D−3
C9E7	D−2
C9F1	E−3
C9F2	E−3
C9F3	E−2
C9F3	E−2
C9F4	E−2
C9F5	D−2
C9M0	B−5
C9M1	B−5
C9M2	C−5
C9M3	C−5

SYMBOL NO.	ADDRESS
C9M4	C−5
C9M5	C−5
C9M6	B−5
C9M7	B−5
C9M8	B−5
D900	A−1
D901	C−2
D902	C−1
D903	C−1
D904	B−2
D905	B−1
D906	C−2
D907	B−1
D950	B−3
D951	A−3
D952	B−3
D953	B−2
D954	B−3
D956	A−4
D957	B−4
D958	A−4
D959	B−4
D960	B−4
D9M0	B−5
IC900	C−2
IC950	B−3
IC951	B−4
IC9A0	D−4
IC9A1	E−4
IC9A2	E−4
IC9A3	D−2
IC9A4	E−1
IC9A5	D−3
IC9A6	D−4
IC9A7	D−3
IC9A8	D−3
IC9B0	C−4
IC9B1	C−4
IC9M0	C−5
K900	B−1
L900	B−1
L902	A−2
L950	B−3
L9A0	D−4
L9A1	E−5
L9A2	D−4
L9A3	D−2
L9A4	D−2
L9A5	D−3
L9A6	D−3
L9F1	E−3
L9F2	E−3
NB	D−5
ND	C−1
NE	C−2
NF	C−2
NH	C−1
NM	E−4
NP	D−1
NV	E−1
NX	D−2

SYMBOL NO.	ADDRESS
PC950	B−4
PC951	B−4
PF	E−4
PP	E−2
PT1	E−4
PT2	E−4
Q900	C−1
Q901	C−1
Q9B0	C−4
Q9M0	B−5
Q9M1	B−5
Q9M2	C−5
R900	C−1
R902	B−1
R903	B−1
R908	A−1
R909	A−1
R910	B−1
R911	B−1
R915	B−2
R916	B−2
R920	B−2
R921	B−1
R956	B−3
R957	B−2
R958	B−3
R959	A−3
R963	A−3
R964	A−4
R970	B−2
R971	B−2
R9F1	E−3
R9M0	B−5
R9M1	B−5
R9M2	B−5
R9M3	B−5
R9M4	B−5
R9M5	C−5
R9M6	C−5
R9M7	C−5
R9M8	C−5
R9M9	C−5
R9N0	C−5
R9N1	B−5
R9N2	B−5
R9N3	B−5
RB	B−5
RE	A−2
RP1	A−2
RP3	A−1
RY	C−1
RY	B−5
T950	A−3
XH	C−4
Z950	C−2

PCB-POWER (SOLDER SIDE)

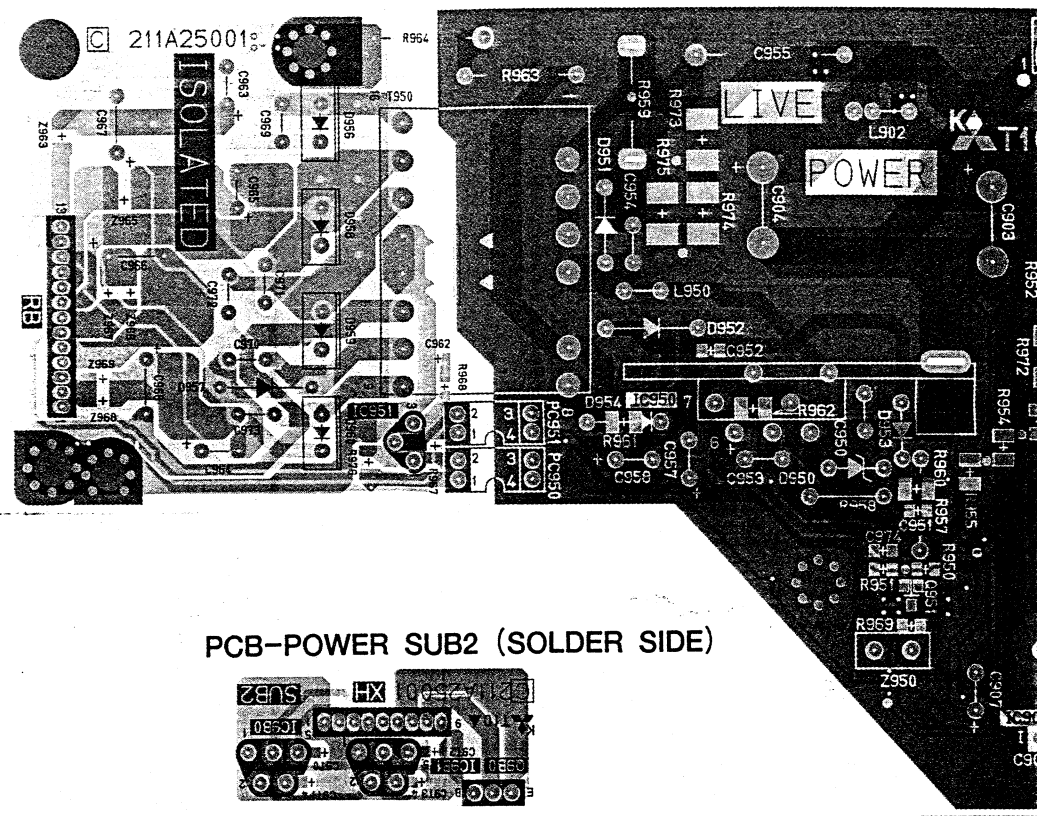

T SIDE)

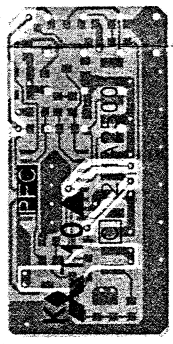

PCB-PFC (SOLDER SIDE)

PCB-POWER SUB2 (SOLDER SIDE)

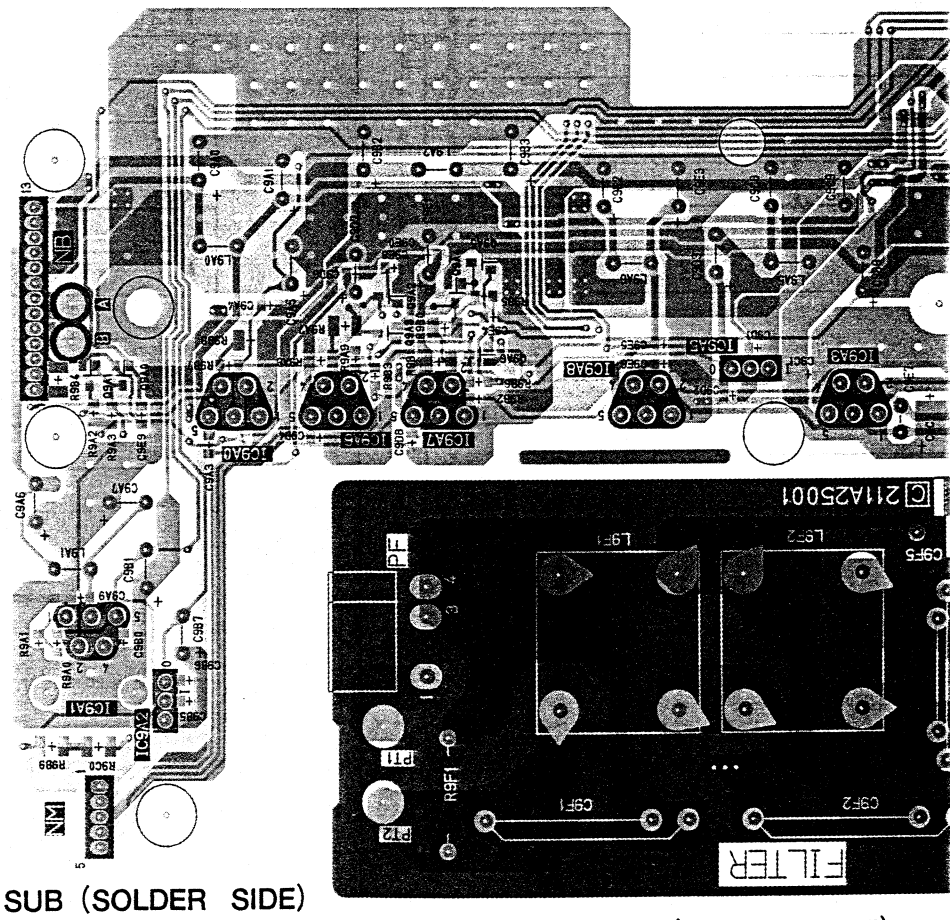

PCB-POWER SUB (SOLDER SIDE)

PCB-FILTER (SOLDER SIDE)

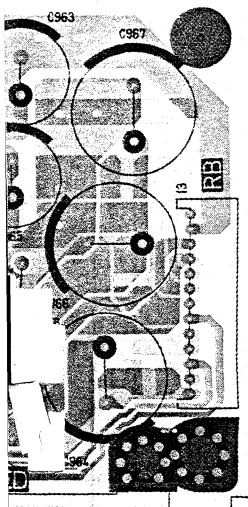

)NENT SIDE)

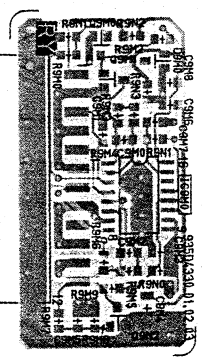

PCB-PFC
(COMPONENT SIDE)

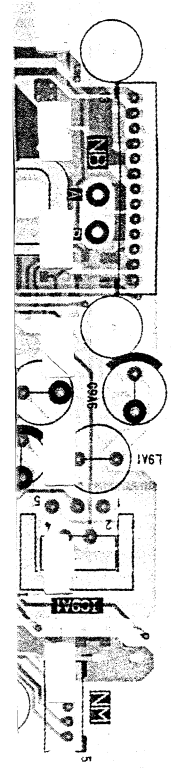

SYMBOL NO.	ADDRESS
A	D−1
A	D−4
B	D−4
B	D−1
C900	A−2
C901	A−1
C902	B−1
C903	A−2
C904	A−3
C905	B−2
C906	C−2
C907	C−2
C910	B−2
C911	B−2
C950	B−3
C953	B−3
C954	A−3
C955	A−3
C957	B−3
C958	B−3
C963	A−4
C964	B−4
C965	A−4
C966	A−5
C967	A−5
C968	B−5
C969	A−4
C970	B−4
C971	B−4
C972	B−4
C973	B−4
C9A0	D−4
C9A1	D−4
C9A2	C−1
C9A5	D−4
C9A6	D−5
C9A7	D−4
C9A8	C−1
C9B1	E−4
C9B2	D−4
C9B3	D−3
C9B4	D−2
C9B7	E−4
C9B8	D−1
C9B9	D−2
C9C3	D−2
C9C7	E−1
C9C8	D−3
C9C9	D−2
C9D3	D−3
C9D7	D−4
C9E1	D−4
C9E2	D−3
C9E3	D−3
C9E7	D−2
C9F1	E−3
C9F2	E−3
C9F3	E−2
C9F3	E−2
C9F4	E−2
C9F5	D−2
C9M0	B−5
C9M1	B−5
C9M2	C−5
C9M3	C−5

SYMBOL NO.	ADDRESS
C9M4	C−5
C9M5	C−5
C9M6	B−5
C9M7	B−5
C9M8	B−5
D900	A−1
D901	C−2
D902	C−1
D903	C−1
D904	B−2
D905	B−1
D906	C−2
D907	B−1
D950	B−3
D951	A−3
D952	B−3
D953	B−2
D954	B−3
D956	A−4
D957	B−4
D958	A−4
D959	B−4
D960	B−4
D9M0	B−5
IC900	C−2
IC950	B−3
IC951	B−4
IC9A0	D−4
IC9A1	E−4
IC9A2	E−4
IC9A3	D−2
IC9A4	E−1
IC9A5	D−3
IC9A6	D−4
IC9A7	D−3
IC9A8	D−3
IC9B0	C−4
IC9B1	C−4
IC9M0	C−5
K900	B−1
L900	B−1
L902	A−2
L950	B−3
L9A0	D−4
L9A1	E−5
L9A2	D−4
L9A3	D−2
L9A4	D−2
L9A5	D−3
L9A6	D−3
L9F1	E−3
L9F2	E−3
NB	D−5
ND	C−1
NE	C−2
NF	C−2
NH	C−1
NM	E−4
NP	D−1
NV	E−1
NX	D−2

SYMBOL NO.	ADDRESS
PC950	B−4
PC951	B−4
PF	E−4
PP	E−2
PT1	E−4
PT2	E−4
Q900	C−1
Q901	C−1
Q9B0	C−4
Q9M0	B−5
Q9M1	B−5
Q9M2	C−5
R900	C−1
R902	B−1
R903	B−1
R908	A−1
R909	A−1
R910	B−1
R911	B−1
R915	B−2
R916	B−2
R920	B−2
R921	B−1
R956	B−3
R957	B−2
R958	B−3
R959	A−3
R963	A−3
R964	A−4
R970	B−2
R971	B−2
R9F1	E−3
R9M0	B−5
R9M1	B−5
R9M2	B−5
R9M3	B−5
R9M4	B−5
R9M5	C−5
R9M6	C−5
R9M7	C−5
R9M8	C−5
R9M9	C−5
R9N0	C−5
R9N1	B−5
R9N2	B−5
R9N3	B−5
RB	B−5
RE	A−2
RP1	A−2
RP3	A−1
RY	C−1
RY	B−5
T950	A−3
XH	C−4
Z950	C−2

PCB-POWER (SOLDER SIDE)

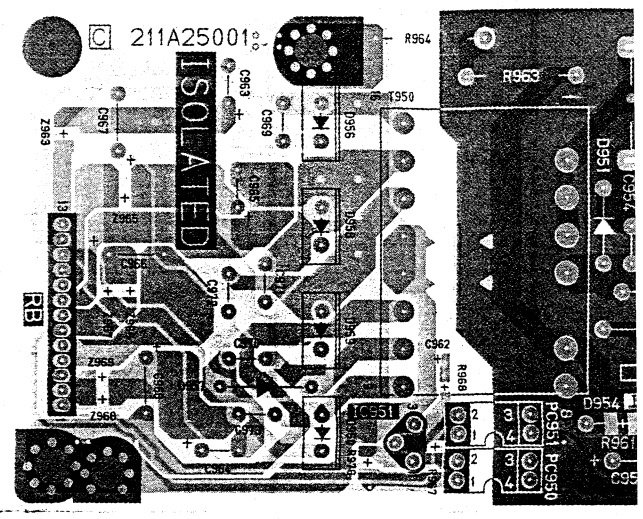

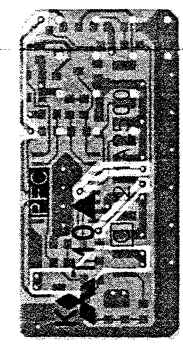

PCB-PFC
(SOLDER SIDE)

PCB-POWER SUB2 (SOLDER

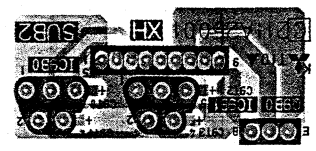

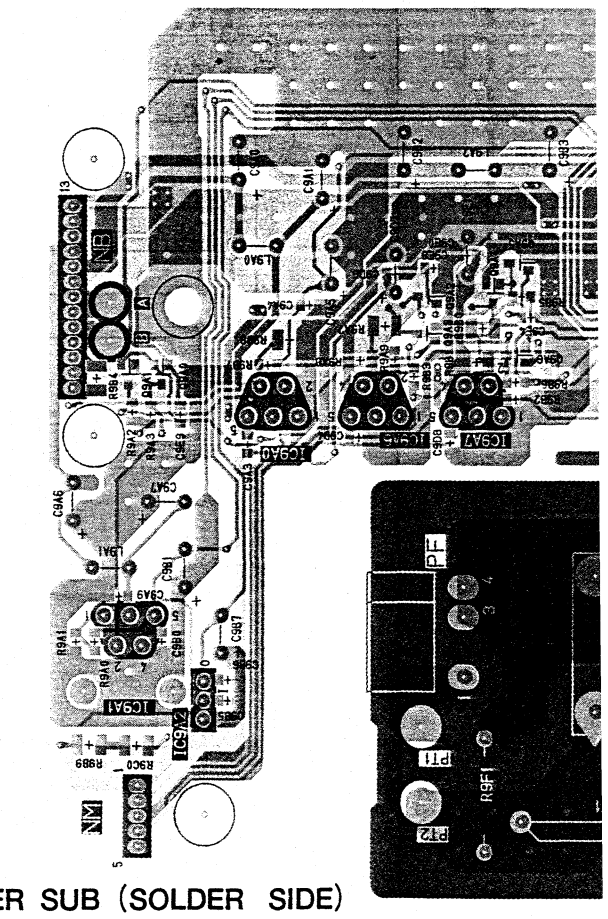

PCB-POWER SUB (SOLDER SIDE)

PCB-F

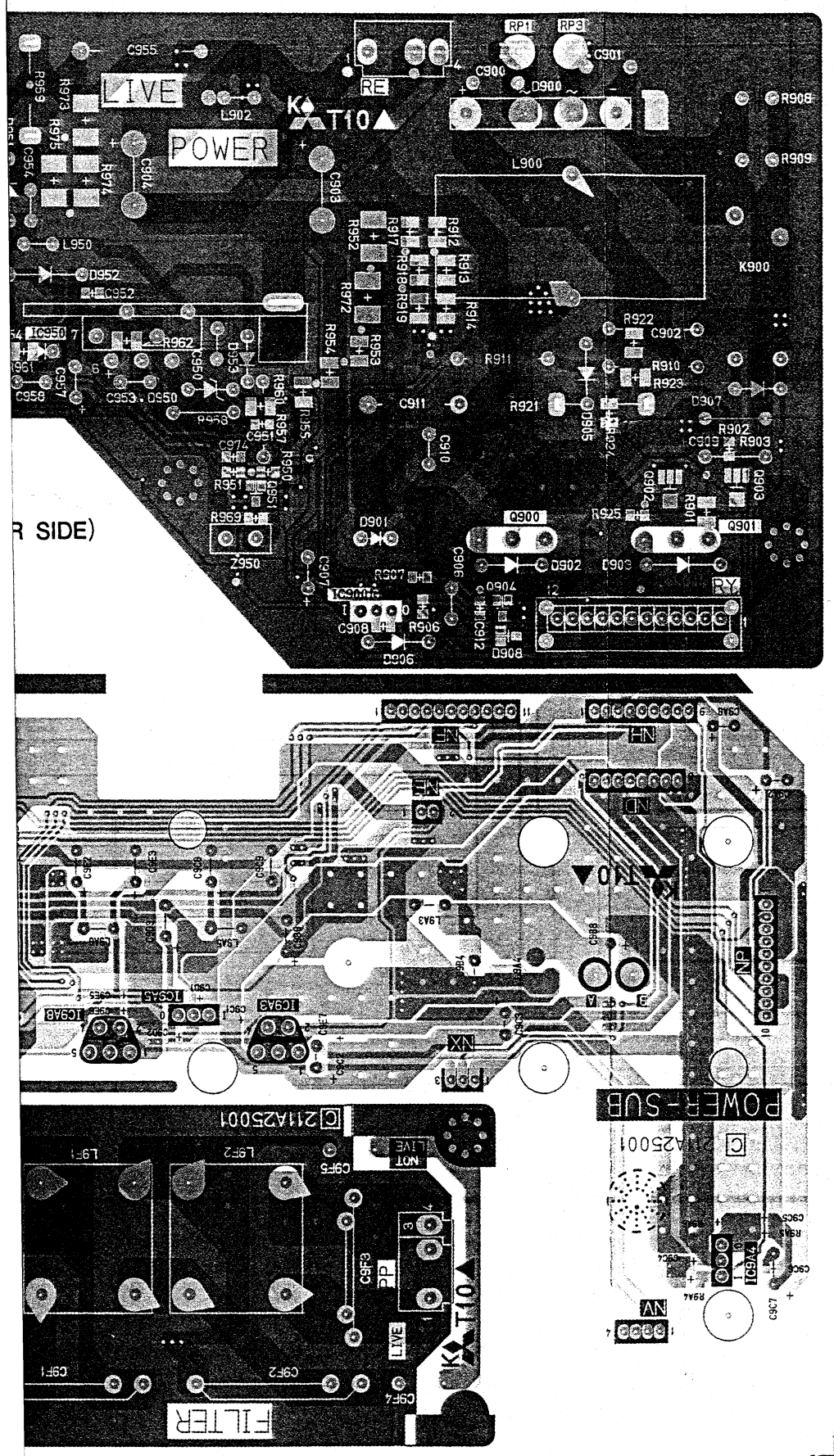

-FILTER (SOLDER SIDE)

SYMBOL NO.	ADDRESS
A	D−5
A	D−1
B	D−1
B	D−5
C900	A−4
C901	A−5
C902	B−5
C903	A−4
C904	A−3
C906	C−4
C907	C−4
C908	C−4
C909	B−5
C910	B−4
C911	B−4
C912	C−4
C950	B−3
C951	B−4
C952	B−3
C953	B−3
C954	A−3
C955	A−3
C957	B−3
C958	B−3
C962	B−2
C963	A−2
C964	B−2
C965	A−2
C966	A−1
C967	A−1
C968	B−1
C969	A−2
C970	B−2
C971	B−2
C972	B−2
C973	B−2
C974	B−3
C9A0	D−2
C9A1	D−2
C9A2	C−5
C9A3	D−2
C9A4	D−2
C9A5	D−2
C9A6	D−1
C9A7	D−2
C9A8	C−5
C9A9	E−2
C9B0	E−2
C9B1	E−2
C9B2	D−2
C9B3	D−3
C9B4	D−4
C9B5	E−2
C9B6	E−2
C9B7	E−2
C9B8	D−5
C9B9	D−4
C9C1	D−3
C9C2	D−4
C9C3	D−4
C9C4	E−5
C9C5	E−5
C9C6	E−5
C9C7	E−5
C9C8	D−3

SYMBOL NO.	ADDRESS
C9C9	D−4
C9D1	D−3
C9D2	D−3
C9D3	D−3
C9D4	D−2
C9D6	D−2
C9D7	D−2
C9D8	D−2
C9E0	D−2
C9E1	D−2
C9E2	D−3
C9E3	D−3
C9E4	D−3
C9E5	D−3
C9E6	D−3
C9E7	D−4
C9E8	D−2
C9E9	D−2
C9F1	E−3
C9F2	E−3
C9F3	E−4
C9F3	E−4
C9F4	E−4
C9F5	D−4
C9T0	C−2
C9T1	C−2
C9T2	C−2
C9T3	C−2
D900	A−5
D901	C−4
D902	C−4
D903	C−5
D905	B−5
D906	C−4
D907	B−5
D908	C−4
D950	B−3
D951	A−3
D952	B−3
D953	B−4
D954	B−3
D956	A−2
D957	B−2
D958	A−2
D959	B−2
D960	B−2
IC900	C−4
IC950	B−3
IC951	B−2
IC9A0	D−2
IC9A1	E−2
IC9A2	E−2
IC9A3	D−4
IC9A4	E−5
IC9A5	D−3
IC9A6	D−2
IC9A7	D−2
IC9A8	D−3
IC9B0	C−2
IC9B1	C−2
K900	B−5
L900	B−5
L902	A−4

SYMBOL NO.	ADDRESS
L950	B−3
L9A0	D−2
L9A1	E−1
L9A2	D−2
L9A3	D−4
L9A4	D−4
L9A5	D−3
L9A6	D−3
L9F1	E−3
L9F2	E−3
NB	D−1
ND	C−5
NE	C−4
NF	C−4
NH	C−5
NM	E−2
NP	D−5
NV	E−5
NX	D−4
PC950	B−2
PC951	B−2
PF	E−2
PP	E−4
PT1	E−2
PT2	E−2
Q900	C−4
Q901	C−5
Q902	B−5
Q903	B−5
Q904	C−4
Q951	B−4
Q9A0	D−2
Q9A1	D−2
Q9A2	D−2
Q9A3	D−2
Q9A4	D−3
Q9A5	D−3
Q9A6	D−3
Q9B0	C−2
R901	B−5
R902	B−5
R903	B−5
R906	C−4
R907	C−4
R908	A−5
R909	A−5
R910	B−5
R911	B−5
R912	B−4
R913	B−4
R914	B−4
R917	B−4
R918	B−4
R919	B−4
R921	B−5
R922	B−5
R923	B−5
R924	B−5
R925	B−5
R950	B−4
R951	B−3

SYMBOL NO.	ADDRESS
R952	B−4
R953	B−4
R954	B−4
R955	B−4
R957	B−4
R958	B−3
R959	A−3
R960	B−4
R961	B−3
R962	B−3
R963	A−3
R964	A−2
R967	B−2
R968	B−2
R969	B−4
R972	B−4
R973	A−3
R974	A−3
R975	A−3
R976	B−2
R9A0	E−1
R9A1	E−1
R9A2	D−2
R9A3	D−2
R9A4	E−5
R9A5	E−5
R9A6	E−5
R9A7	D−2
R9A8	D−2
R9A9	D−2
R9B0	D−2
R9B1	D−2
R9B2	D−3
R9B3	D−2
R9B4	D−1
R9B5	D−3
R9B6	D−3
R9B7	D−2
R9B8	D−2
R9B9	E−1
R9C0	E−2
R9F1	E−3
RB	B−1
RE	A−4
RP1	A−4
RP3	A−5
RY	C−5
RY	B−1
T950	A−3
XH	C−2
Z950	C−4
Z963	A−1
Z965	A−1
Z966	B−1
Z967	B−1
Z968	B−1
Z969	B−1

C7J6	C−3
C7J7	C−3

IC7D3	B−4
IC7D4	B−4

R7A6	B−2
R7A7	B−2

R7P3	B−4
R7P4	B−4

PCB−TERMINAL (COMPONENT SIDE)

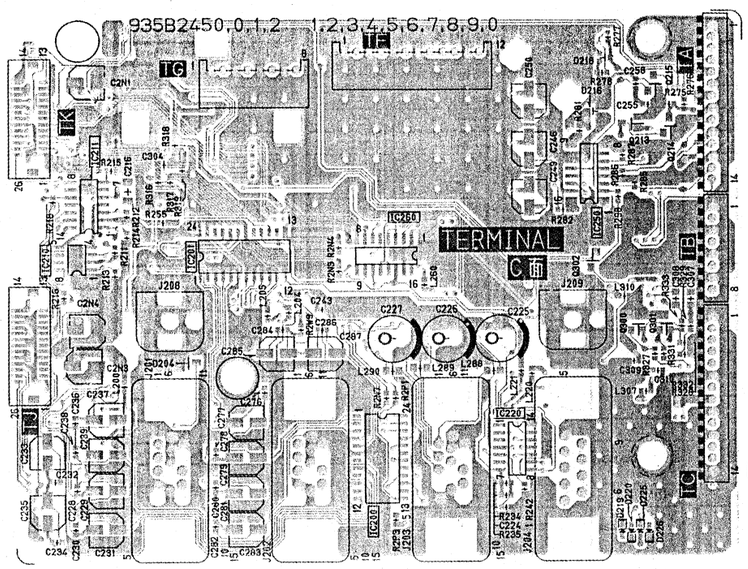

PCB−DECODER (COMPONENT SIDE)

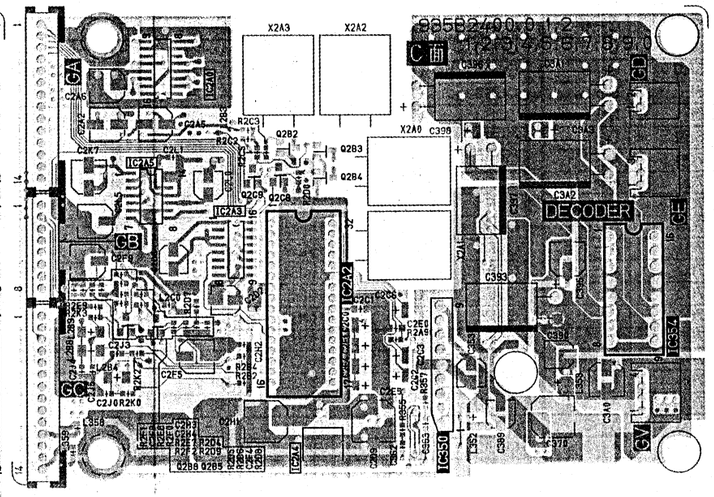

SYMBOL NO.	ADDRESS
C216	B−1
C224	C−3
C225	B−3
C226	B−3
C227	B−2
C228	C−1
C229	C−1
C230	C−1
C231	C−1
C232	C−1
C233	C−1
C234	C−1
C235	C−1
C236	C−1
C237	C−1
C238	C−1
C239	C−1
C243	B−2
C246	A−3
C249	B−3
C250	A−3
C255	A−3
C256	A−3
C276	B−2
C277	C−2
C278	C−2
C279	C−2
C280	C−2
C281	C−2
C282	C−2

SYMBOL NO.	ADDRESS
C283	C−2
C284	B−2
C285	B−2
C286	B−2
C287	B−2
C2A2	A−4
C2A5	A−4
C2A6	A−4
C2C0	B−5
C2C1	B−5
C2C2	B−5
C2C3	B−5
C2C6	B−5
C2D2	B−5
C2D6	B−4
C2D9	C−5
C2E0	B−5
C2E1	B−5
C2E4	B−5
C2E5	B−5
C2F4	B−5
C2F5	B−5
C2F8	B−4
C2F9	B−4
C2H1	C−5
C2H2	B−5
C2H3	B−4
C2H4	B−4
C2J0	B−4
C2J3	B−4

SYMBOL NO.	ADDRESS
C2J4	B−4
C2J5	B−4
C2K7	A−4
C2L0	B−5
C2L1	A−4
C2L5	B−4
C2N1	A−1
C2N3	B−1
C2N4	B−1
C304	A−1
C307	B−4
C308	B−4
C309	B−3
C310	B−3
C353	B−6
C362	C−5
C363	C−6
C370	C−6
C389	C−6
C390	B−6
C393	B−6
C395	B−6
C396	A−5
C397	A−6
C398	A−6
C3A0	B−6
C3A1	A−6
C3A2	A−6
C3A3	A−6

SYMBOL NO.	ADDRESS
D204	B−2
D216	A−3
D218	A−3
D219	C−3
D220	C−3
D225	C−3
D226	C−3
GA	A−4
GB	B−4
GC	B−4
GD	A−6
GE	B−6
GV	B−6
IC200	C−2
IC201	B−2
IC210	B−1
IC211	B−1
IC220	C−3
IC250	A−3
IC260	B−2
IC2A0	A−4
IC2A2	B−5
IC2A3	B−5
IC2A4	C−5
IC2A5	B−4
IC350	C−6
IC354	B−6

SYMBOL NO.	ADDRESS
J201	C−1
J202	C−2
J203	C−3
J204	C−3
J208	B−1
J209	B−3
L200	B−1
L204	B−2
L205	B−2
L220	B−3
L221	B−3
L260	B−2
L288	B−3
L289	B−2
L290	B−2
L2B3	A−5
L2B4	B−4
L2B8	B−4
L2B9	B−4
L2C0	B−4
L307	B−3
L310	B−3
L352	C−6
L353	B−6
L358	C−4
L359	C−4
Q213	A−3
Q214	A−3

PCB−DECODER (SOLDER SIDE)

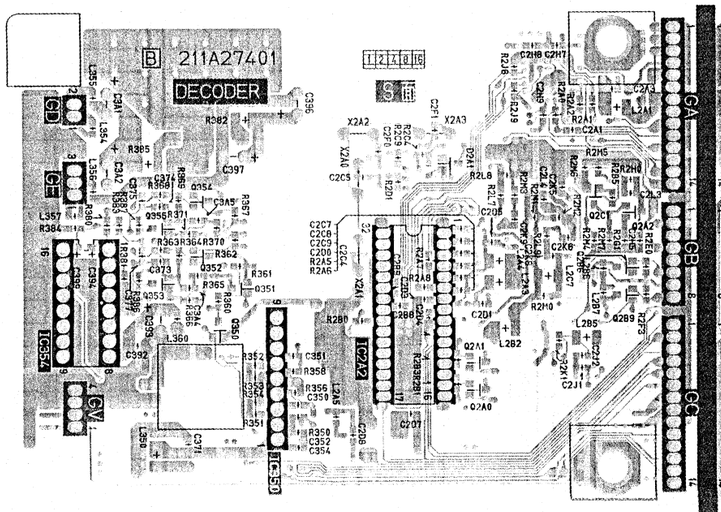

PCB−TERMINAL (SOLDER SIDE)

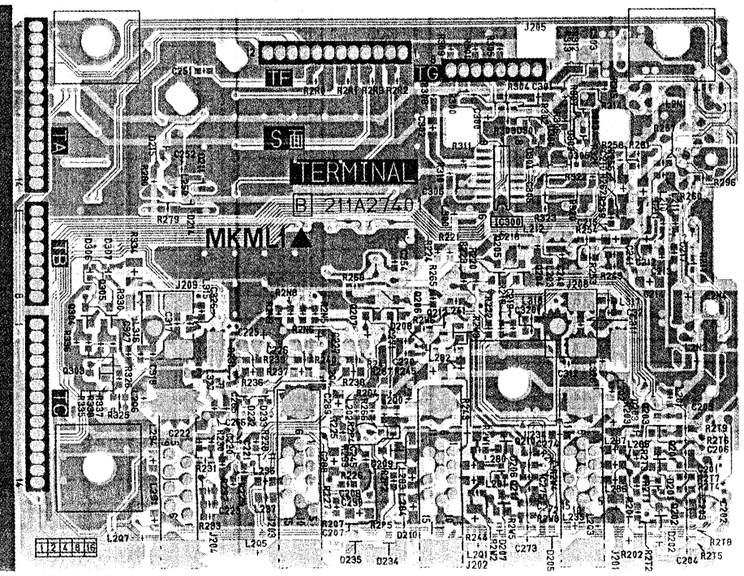

SYMBOL NO.	ADDRESS
C201	C−6
C202	C−6
C203	C−6
C204	C−6
C205	B−6
C206	C−6
C207	C−5
C208	C−5
C210	B−6
C211	B−6
C212	B−6
C213	B−6
C214	B−6
C215	B−6
C217	B−6
C218	B−6
C219	B−5
C220	C−4
C221	C−4
C222	C−4
C223	C−4
C225	B−4
C226	B−5
C227	B−5
C240	B−6
C241	B−6
C245	B−5
C251	A−4
C252	A−4
C254	B−5

SYMBOL NO.	ADDRESS
C265	B−4
C266	B−4
C270	B−5
C271	B−5
C272	C−6
C273	C−6
C274	C−6
C275	C−6
C288	C−5
C289	B−5
C290	C−5
C2A1	A−3
C2A3	A−3
C2B8	B−2
C2B9	B−2
C2C4	B−2
C2C5	A−2
C2C7	B−2
C2C8	B−2
C2C9	B−2
C2D0	B−2
C2D1	B−2
C2D3	B−2
C2D4	B−2
C2D5	B−3
C2D7	B−2
C2D8	C−2
C2F0	A−2
C2F1	A−2
C2H5	B−3

SYMBOL NO.	ADDRESS
C2H7	A−3
C2H8	A−3
C2H9	A−3
C2J1	B−3
C2J2	B−3
C2K5	B−3
C2K6	B−3
C2K8	B−3
C2K9	B−3
C2L3	B−3
C2L4	B−3
C300	A−5
C301	A−6
C302	A−5
C303	A−6
C305	B−6
C306	B−5
C311	B−6
C312	B−6
C317	B−4
C318	B−4
C320	B−6
C321	B−6
C326	B−4
C327	B−4
C350	B−2
C351	B−2
C352	C−2
C354	C−2
C371	C−1

SYMBOL NO.	ADDRESS
C373	B−1
C374	B−1
C375	B−1
C377	B−1
C392	B−1
C393	B−1
C394	B−1
C396	A−2
C397	A−1
C399	B−1
C3A1	A−1
C3A2	A−1
C3A4	B−1
C3A5	B−1
D201	C−6
D202	C−6
D203	C−6
D205	C−6
D206	C−5
D207	C−5
D208	B−5
D209	C−5
D210	C−5
D211	B−4
D214	B−4
D215	A−4
D231	B−4
D232	B−4
D233	B−4

SYMBOL NO.	ADDRESS
D234	C−5
D235	C−5
D2A1	A−2
D300	A−6
D301	A−6
D302	A−6
D303	A−6
D304	A−6
D305	A−6
D306	B−4
D307	B−4
GA	A−3
GB	B−3
GC	B−3
GD	A−1
GE	B−1
GV	B−1
IC2A2	B−2
IC300	A−5
IC350	C−2
IC354	B−1
J201	C−6
J202	C−5
J203	C−5
J204	C−4
J208	B−6
J209	B−4

17

PCB-L BOX (COMPONENT SIDE)

PCB-F BOX (COMPONENT SIDE)

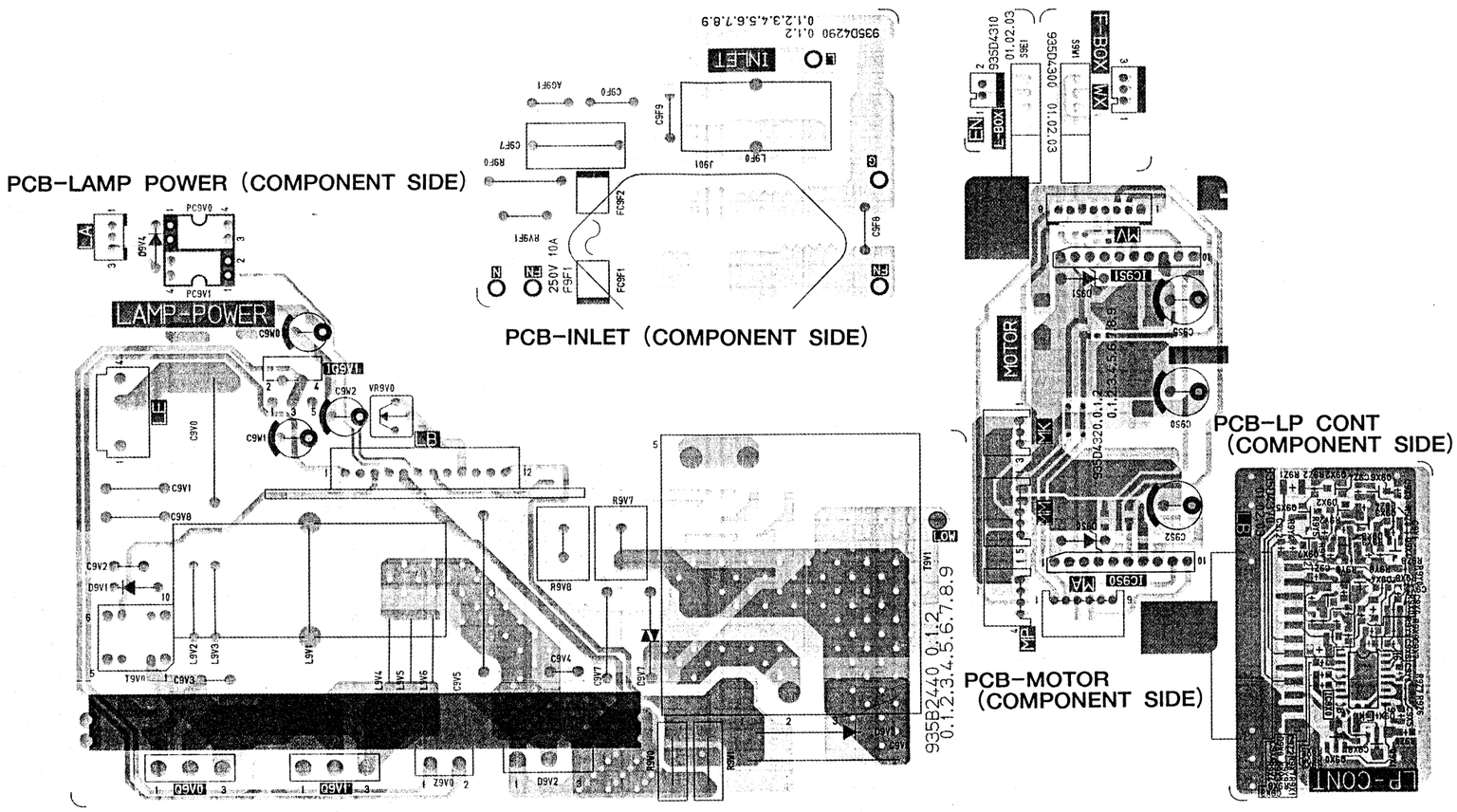

SYMBOL NO.	ADDRESS
AG9F1	A−3
C9F0	A−3
C9F7	A−3
C9F8	B−4
C9F9	A−3
C9S0	B−6
C9S2	C−6
C9S5	B−6
C9V0	C−1
C9V1	C−1
C9V2	C−1
C9V3	D−1
C9V4	D−3
C9V5	D−3
C9V6	D−4
C9V7	D−3
C9V8	C−1
C9W0	B−2
C9W1	C−2
C9W2	C−2
C9X0	C−6
C9X2	D−6
C9X3	D−6
C9X4	C−6
C9X5	D−6
C9X6	D−6
C9X7	D−6
C9X8	D−6
C9X9	D−6
C9Y0	D−6
C9Y1	C−6
C9Y2	C−6
C9Y3	C−6
C9Z1	C−6
C9Z2	C−6
C9Z3	C−6
C9Z4	C−6
D9S0	C−5
D9S1	B−5
D9V1	C−1
D9V2	D−3
D9V3	D−4
D9V4	B−1

SYMBOL NO.	ADDRESS
D9V7	D−3
D9X0	C−6
D9X1	D−6
D9X2	C−6
D9X3	C−6
D9X4	C−6
EN	A−5
F9F1	B−3
FC9F1	B−3
FC9F2	B−3
FN	B−3
FN	B−4
G	B−4
IC9S0	C−5
IC9S1	B−5
IC9V1	C−2
IC9X0	D−6
J901	B−4
L	A−4
L9F0	A−4
L9V1	D−2
L9V2	D−1
L9V3	D−1
L9V4	D−2
L9V5	D−2
L9V6	D−2
LA	B−1
LB	C−2
LB	D−6
LE	C−1
LOW	C−5
MA	C−5
MK	C−5
MM	C−5

SYMBOL NO.	ADDRESS
MP	C−5
MV	B−5
N	B−3
PC9V0	B−1
PC9V1	B−1
Q9V0	D−1
Q9V1	D−2
Q9X0	D−6
Q9X1	D−6
Q9X2	C−6
Q9X3	C−6
Q9X4	C−6
Q9X5	C−6
Q9X6	C−6
Q9X7	C−6
R9F0	B−3
R9V7	C−3
R9V8	C−3
R9W0	D−3
R9W1	D−4
R9X0	C−6
R9X1	D−6
R9X2	D−6
R9X3	D−6
R9X4	D−6
R9X5	D−6
R9X6	D−6
R9X7	C−6
R9X8	C−6
R9X9	D−6
R9Y0	C−6
R9Y1	D−6
R9Y2	C−6
R9Y3	C−6
R9Y4	C−6
R9Y5	C−6
R9Y6	C−6
R9Y7	C−6
R9Y8	C−6
R9Z0	C−6
R9Z1	C−6

SYMBOL NO.	ADDRESS
R9Z2	C−6
R9Z4	C−6
R9Z5	D−6
R9Z6	D−6
R9Z7	D−6
R9Z8	C−6
RV9F1	B−3
S9E1	A−5
S9W1	A−5
T9V0	D−1
T9V1	C−4
VR9V0	C−2
WX	A−5
Z9V0	D−2

PCB-PCCARD (COMPONENT SIDE)

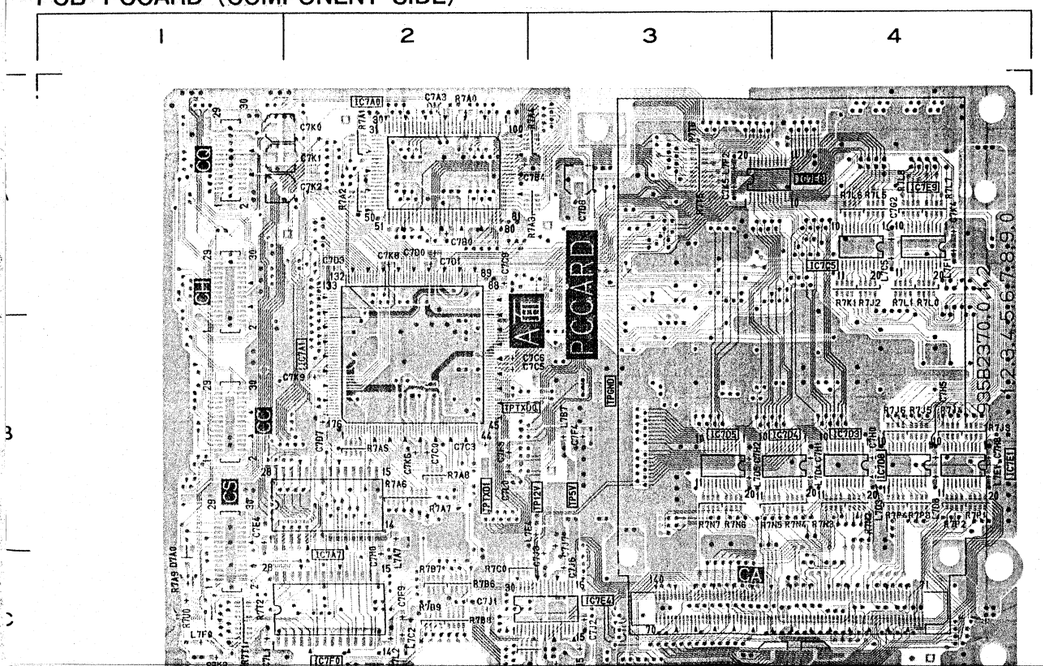

PCB-PCCARD (COMPONENT SIDE)

SYMBOL NO.	ADDRESS
C7A3	A−2
C7B0	A−2
C7B4	A−3
C7C0	B−2
C7C3	B−2
C7C5	B−2
C7C6	B−2
C7C9	A−2
C7D0	A−2
C7D1	A−2
C7D3	A−2
C7D7	B−2
C7D8	A−3
C7E4	B−1
C7F4	B−3
C7F5	B−2
C7F9	C−2
C7G2	A−4
C7H0	B−4
C7H1	B−4
C7H2	B−3
C7H5	B−4
C7H8	B−4
C7J1	C−2
C7J2	C−3
C7J3	C−3
C7J4	C−3
C7J5	C−3
C7J6	C−3

SYMBOL NO.	ADDRESS
C7K0	A−2
C7K1	A−2
C7K2	A−2
C7K3	C−1
C7K4	A−4
C7K5	A−3
C7K6	B−2
C7K8	A−2
C7K9	B−2
C7L0	B−2
C7L1	C−1
C7L2	C−2
C7L8	C−4
C7L9	C−4
C7M0	C−2
CA	C−4
CC	B−1
CH	A−1
CQ	A−1
CS	C−1
D7A0	C−1
IC7A0	A−2
IC7A1	B−2
IC7A7	B−2
IC7C5	A−4
IC7D3	B−4

SYMBOL NO.	ADDRESS
IC7D5	B−3
IC7D8	B−4
IC7E1	B−4
IC7E4	C−3
IC7E8	A−4
IC7E9	A−4
IC7F0	C−2
L7A7	B−2
L7B7	B−3
L7C2	C−2
L7C5	A−4
L7D3	B−4
L7D4	B−4
L7D5	B−3
L7D8	B−4
L7E1	B−4
L7E4	B−3
L7F0	C−1
L7F1	A−4
L7F2	A−3
R7A0	A−2
R7A1	A−2
R7A2	A−2
R7A3	A−3
R7A4	A−3
R7A5	B−2
R7A6	B−2

SYMBOL NO.	ADDRESS
R7A8	B−2
R7A9	C−1
R7B6	C−2
R7B7	C−2
R7B8	C−2
R7B9	C−2
R7C0	C−2
R7C1	C−3
R7J2	A−4
R7J3	B−4
R7J4	B−4
R7J5	B−4
R7J6	B−4
R7K1	A−4
R7L0	A−4
R7L1	A−4
R7L5	A−4
R7L6	A−4
R7L7	A−4
R7L8	A−4
R7N2	B−4
R7N3	B−4
R7N4	B−4
R7N5	B−4
R7N6	B−3
R7N7	B−3
R7P1	B−4
R7P2	B−4
R7P3	B−4

SYMBOL NO.	ADDRESS
R7T1	C−1
R7T2	C−1
R7T5	A−3
R7T6	A−3
R7U0	C−1
TP12V	B−3
TP5V	B−3
TPBOOT	C−2
TPGND	B−3
TPTXD0	B−2
TPTXD1	B−2

PCB-PCCARD (SOLDER SIDE)

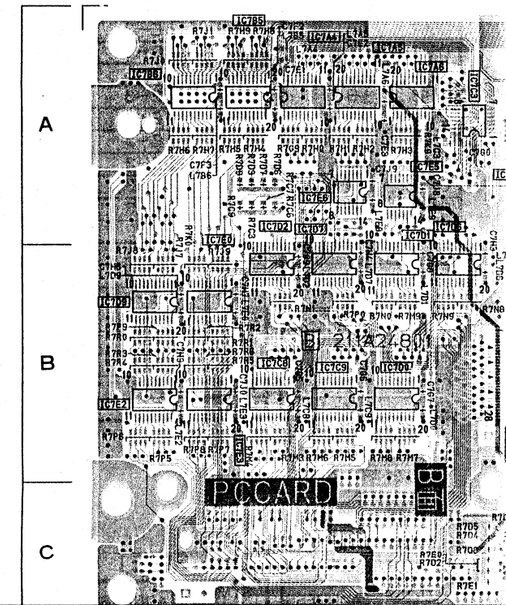

PCB-F BOX (SOLDER SIDE)

PCB-L BOX (SOLDER SIDE)

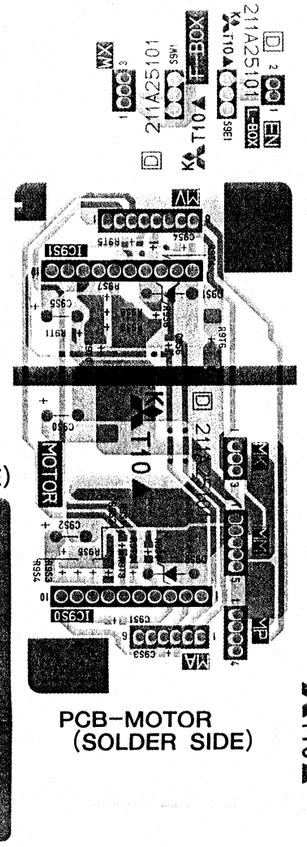

PCB-INLET (SOLDER SIDE)

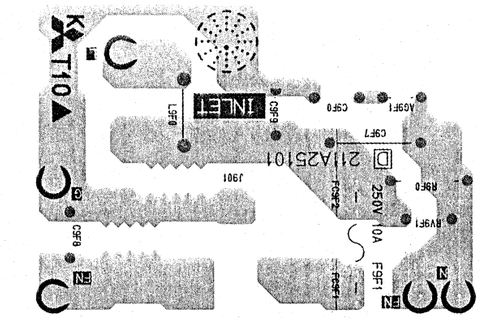

PCB-LAMP POWER (SOLDER SIDE)

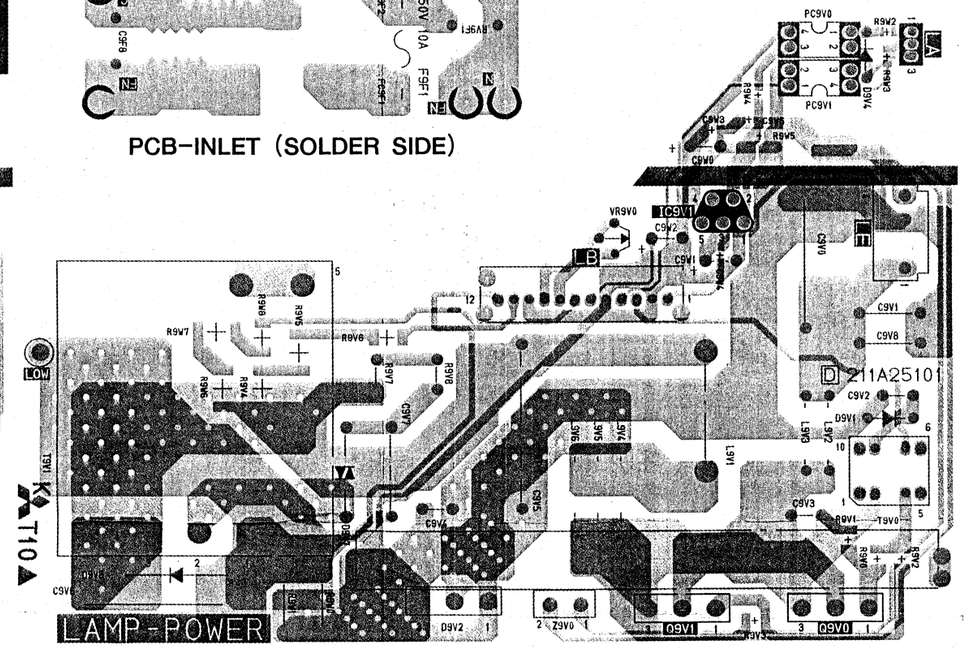

PCB-LP CONT (SOLDER SIDE)

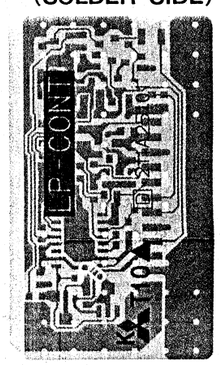

PCB-MOTOR (SOLDER SIDE)

SYMBOL NO.	ADDRESS
AG9F1	A−4
C9F0	A−4
C9F7	A−4
C9F8	B−3
C9F9	A−4
C9S0	B−2
C9S1	C−2
C9S2	C−2
C9S3	C−2
C9S4	B−2
C9S5	B−2
C9S6	B−2
C9V0	C−6
C9V1	C−6
C9V2	C−6
C9V3	D−6
C9V4	D−4
C9V5	D−5
C9V6	D−4
C9V7	D−4
C9V8	C−6
C9W0	B−5
C9W1	C−5
C9W2	C−5
C9W3	B−5
C9W4	C−5
C9W6	B−6
D9S0	C−2
D9S1	B−2
D9V1	C−6
D9V2	D−4
D9V3	D−3
D9V4	B−6
D9V7	D−4
EN	A−2
F9F1	B−4
FC9F1	B−4
FC9F2	B−4
FN	B−4

SYMBOL NO.	ADDRESS
FN	B−3
G	B−3
IC9S0	C−2
IC9S1	B−2
IC9V1	C−6
J901	B−4
L	A−3
L9F0	A−3
L9V1	D−5
L9V2	D−6
L9V3	D−6
L9V4	D−5
L9V5	D−5
L9V6	D−5
LA	B−6
LB	C−5
LB	D−1
LE	C−6
LOW	C−3
MA	C−2
MK	C−2
MM	C−2
MP	C−2
MV	B−2
N	B−5
PC9V0	B−6
PC9V1	B−6
Q9V0	D−6
Q9V1	D−5
R9F0	B−4
R9S0	C−2
R9S1	C−2
R9S2	C−2
R9S3	C−2

SYMBOL NO.	ADDRESS
R9S4	C−2
R9S5	C−2
R9S6	B−2
R9S7	B−2
R9S8	B−2
R9S9	B−2
R9T0	B−2
R9T1	B−2
R9T2	C−2
R9T3	C−2
R9T4	B−2
R9T5	B−2
R9T6	B−2
R9V0	D−6
R9V1	D−6
R9V2	D−6
R9V3	D−6
R9V4	C−4
R9V5	C−4
R9V6	C−4
R9V7	C−4
R9V8	C−4
R9W0	D−4
R9W1	D−4
R9W2	B−6
R9W3	B−6
R9W4	B−6
R9W5	B−6
R9W6	C−3
R9W7	C−3
R9W8	C−4
RV9F1	B−5
S9E1	A−2
S9W1	A−2
T9V0	D−6
T9V1	C−3
VR9V0	C−5
WX	A−2
Z9V0	D−5

DER SIDE)

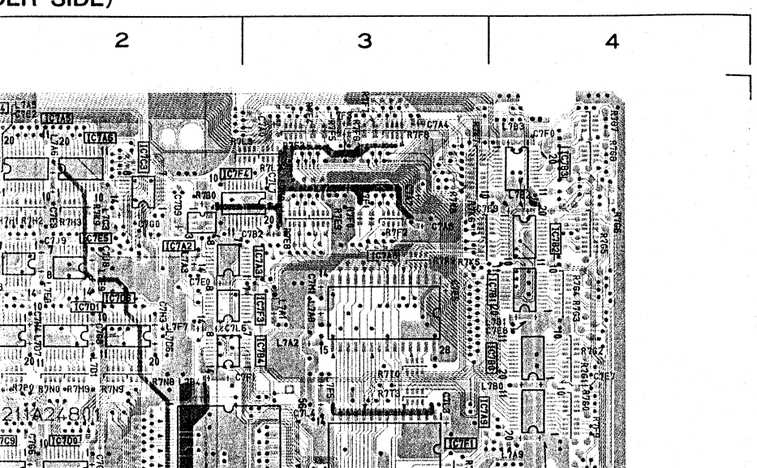

PCB-PCCARD (SOLDER SIDE)

SYMBOL NO.	ADDRESS
C7A0	A−3
C7A2	A−3
C7A4	A−3
C7A7	A−3
C7A8	A−3
C7B2	A−3
C7D9	A−2
C7E0	A−2
C7E1	A−1
C7E2	A−2
C7E3	A−2
C7E5	A−3
C7E6	B−4
C7E7	B−4
C7E8	B−4
C7E9	A−4
C7F0	A−4
C7F1	B−2
C7F2	A−1

SYMBOL NO.	ADDRESS
C7H4	B−2
C7H6	B−1
C7H7	B−1
C7H9	B−1
C7J0	B−1
C7J8	A−2
C7J9	A−2
C7L3	B−3
C7L4	B−3
C7L5	C−4
C7L6	B−2
C7L7	A−3
C7M1	A−3
CA	C−2
CC	B−4
CH	A−4
CQ	A−4
CS	C−4

SYMBOL NO.	ADDRESS
IC7B3	A−4
IC7B4	B−2
IC7B5	A−1
IC7B6	A−1
IC7B7	B−2
IC7C1	C−3
IC7C2	C−3
IC7C3	A−2
IC7C6	C−2
IC7C7	C−2
IC7C8	B−1
IC7C9	B−2
IC7D0	B−2
IC7D1	B−2
IC7D2	B−1
IC7D6	B−2
IC7D7	B−2
IC7D9	B−1
IC7E0	B−1

SYMBOL NO.	ADDRESS
L7A1	B−3
L7A2	B−3
L7A3	A−2
L7A4	A−1
L7A5	A−2
L7A6	A−2
L7A8	B−3
L7A9	B−4
L7B0	B−4
L7B1	B−4
L7B2	A−4
L7B3	A−4
L7B4	B−2
L7B5	A−1
L7B6	A−1
L7C1	C−3
L7C3	A−2
L7C6	B−2
L7C7	C−2

SYMBOL NO.	ADDRESS
L7E8	A−2
L7E9	A−2
L7F3	A−3
L7F4	C−4
L7F5	B−3
L7F6	C−4
L7F7	B−2
L7F8	A−3
Q7A0	C−4
R7B0	A−2
R7B1	C−3
R7B2	C−4
R7B3	C−4
R7B4	B−4
R7B5	B−3
R7C2	C−2
R7C3	A−1
R7F4	A−3
R7F5	A−3
R7F6	A−3

SYMBOL NO.	ADDRESS
R7D5	C−2
R7D6	A−1
R7D7	A−1
R7D8	C−2
R7D9	A−1
R7E0	C−2
R7E1	C−2
R7E5	B−3
R7E6	C−4
R7E7	C−4
R7E8	A−3
R7E9	A−3
R7F0	A−3
R7F1	A−3
R7F2	A−3
R7F3	A−3
R7F4	A−3
R7F5	A−3
R7F6	A−3

SYMBOL NO.	ADDRESS
R7G8	A−4
R7G9	A−1
R7H0	A−1
R7H1	A−2
R7H2	A−2
R7H3	A−2
R7H4	A−1
R7H5	A−1
R7H6	A−1
R7H7	A−1
R7H8	A−1
R7H9	A−1
R7J0	A−1
R7J1	A−1
R7J7	B−1
R7J8	B−1
R7J9	B−1
R7K0	B−1
R7K5	A−4

SYMBOL NO.	ADDRESS
R7M3	B−1
R7M4	B−1
R7M5	B−2
R7M6	B−1
R7M7	B−2
R7M8	B−2
R7M9	B−2
R7N0	B−2
R7N1	B−1
R7N8	B−2
R7N9	B−2
R7P0	B−2
R7P5	B−1
R7P6	B−1
R7P7	B−1
R7P8	B−1
R7P9	B−1
R7R0	B−1
R7R1	B−1

SYMBOL NO.	ADDRESS
R7T7	C−4
R7T8	C−4
R7T9	C−4

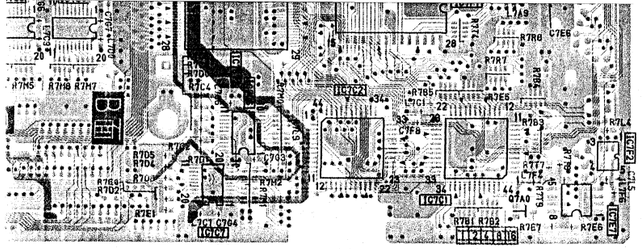

SYMBOL NO.	ADDRESS
C7F2	A−1
C7F3	A−1
C7F8	C−3
C7G0	A−2
C7G3	C−3
C7G4	C−2
C7G5	B−1
C7G6	B−2
C7G7	B−2
C7G8	B−2
C7G9	B−1
C7H3	B−2

SYMBOL NO.	ADDRESS
CS	C−4
IC7A2	A−2
IC7A3	A−2
IC7A4	A−1
IC7A5	A−2
IC7A6	A−2
IC7A8	B−3
IC7A9	B−4
IC7B0	B−4
IC7B1	A−4
IC7B2	A−4

SYMBOL NO.	ADDRESS
IC7E0	B−1
IC7E2	B−1
IC7E3	B−1
IC7E5	A−2
IC7E6	A−2
IC7E7	C−4
IC7F1	B−3
IC7F2	C−4
IC7F3	A−2
IC7F4	A−3
L7A0	A−3

SYMBOL NO.	ADDRESS
L7C7	C−2
L7C8	B−1
L7C9	B−2
L7D0	B−2
L7D1	B−2
L7D2	B−1
L7D6	B−2
L7D7	B−2
L7D9	B−1
L7E0	B−1
L7E2	B−1
L7E3	B−1

SYMBOL NO.	ADDRESS
R7C3	A−1
R7C4	B−2
R7C5	C−2
R7C6	A−1
R7C7	A−1
R7C8	C−2
R7C9	A−1
R7D0	C−2
R7D1	C−2
R7D2	C−2
R7D3	A−1
R7D4	C−2

SYMBOL NO.	ADDRESS
R7F6	A−3
R7F7	A−3
R7F8	A−3
R7F9	B−4
R7G0	B−4
R7G1	B−4
R7G2	B−4
R7G3	A−4
R7G4	A−4
R7G5	A−4
R7G6	A−4
R7G7	A−4

SYMBOL NO.	ADDRESS
R7K5	A−4
R7K6	A−4
R7K7	A−3
R7K8	A−3
R7K9	A−2
R7L2	A−3
R7L3	A−3
R7L4	C−4
R7L9	C−3
R7M0	C−3
R7M1	C−3
R7M2	C−3

SYMBOL NO.	ADDRESS
R7R1	B−1
R7R2	B−1
R7R3	B−1
R7R4	B−1
R7R5	B−1
R7R6	B−1
R7R7	B−4
R7R8	B−4
R7R9	A−3
R7T0	B−3
R7T3	B−3
R7T4	B−3

SYMBOL NO.	ADDRESS

MBOL NO.	ADDRESS
1	C−1
2	C−2
3	C−3
4	C−3
8	B−1
9	B−3
0	B−1
4	B−2
5	B−2
0	B−3
1	B−3
6	B−2
8	B−3
9	B−2
0	B−2
3	A−5
4	B−4
8	B−4
9	B−4
0	B−4
7	B−3
0	B−3
2	C−6
3	B−6
8	C−4
9	C−4
3	A−3
4	A−3

SYMBOL NO.	ADDRESS
Q215	A−3
Q2B2	A−5
Q2B3	A−5
Q2B4	B−5
Q2B5	B−4
Q2B8	B−4
Q2C8	A−5
Q2C9	A−5
Q300	B−3
Q301	B−3
Q302	B−3
R211	B−1
R212	B−1
R213	B−1
R214	B−1
R215	A−1
R216	B−1
R218	B−1
R234	C−3
R235	C−3
R242	C−3
R255	B−1
R275	A−3
R276	A−4
R277	A−3
R278	A−3
R281	A−3
R282	B−3
R285	B−3

SYMBOL NO.	ADDRESS
R286	A−3
R287	A−3
R298	B−3
R2A9	B−5
R2B2	B−5
R2B4	B−5
R2C2	A−5
R2C3	A−5
R2C5	A−5
R2D0	B−5
R2D4	B−4
R2D5	B−4
R2D6	B−5
R2D7	B−5
R2D8	B−5
R2D9	B−4
R2E7	B−4
R2E8	B−4
R2E9	B−4
R2F0	B−4
R2F1	B−4
R2F2	B−4
R2K0	B−4
R2K2	B−4
R2K3	B−4
R2N3	B−2
R2N4	B−2
R2N7	B−2
R2P1	B−2
R2P3	C−2

SYMBOL NO.	ADDRESS
R2W9	B−2
R316	B−1
R317	B−1
R318	A−1
R319	A−1
R327	B−3
R328	B−4
R329	B−4
R331	B−3
R332	B−4
R333	B−4
R355	C−5
R357	B−6
TA	A−4
TB	B−4
TC	B−4
TF	A−2
TG	A−2
TJ	B−1
TK	A−1
X2A0	B−5
X2A1	B−5
X2A2	A−5
X2A3	A−5

PCB−OPTION〔COMPONENT SIDE〕

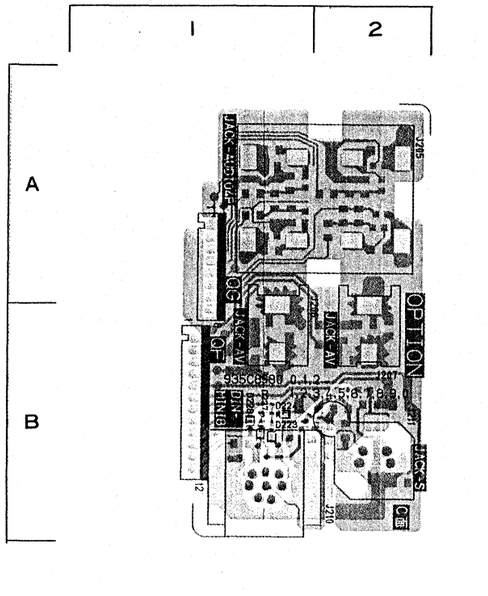

SYMBOL NO.	ADDRESS
D223	B−1
D224	B−1
D227	B−1
D228	B−1
J205	A−2
J206	B−1
J207	B−2
J210	B−1
J211	B−2
QF	B−1
QG	A−1

PCB−OPTION〔SOLDER SIDE〕

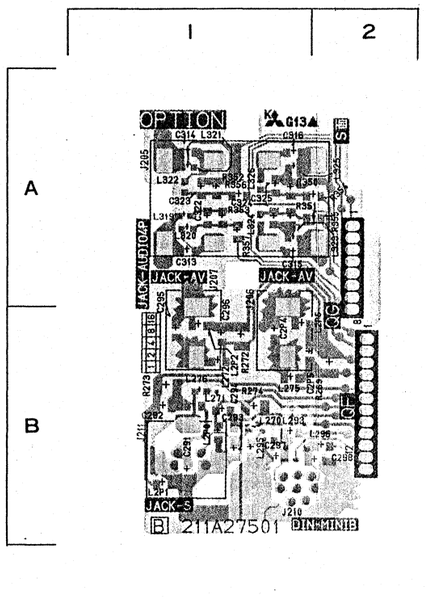

SYMBOL NO.	ADDRESS
C291	B−1
C292	B−1
C293	B−1
C294	B−1
C295	B−1
C296	B−1
C297	B−1
C298	B−2
C2P4	B−1
C2P5	B−2
C313	A−1
C314	A−1
C315	A−1
C316	A−1
C322	A−1
C323	A−1
C324	A−1
C325	A−1
J205	A−1
J206	B−1
J207	B−1
J210	B−1
J211	B−1
L270	B−1
L271	B−1
L272	B−1
L275	B−1
L276	B−1

SYMBOL NO.	ADDRESS
L293	B−1
L295	B−1
L296	B−2
L2P0	B−1
L2P1	B−1
L2P2	B−1
L2P5	B−1
L319	A−1
L320	A−1
L321	A−1
L322	A−1
L323	A−1
L324	A−1
L325	A−1
L326	A−1
QF	B−2
QG	A−2
R269	B−2
R272	B−1
R273	B−1
R274	B−1
R350	A−1
R351	A−1
R352	A−1
R353	A−1
R354	A−2
R355	A−2
R356	A−1

SYMBOL NO.	ADDRESS
R357	A−1

YMBOL NO.	ADDRESS
34	C−5
35	C−5
A1	A−2
00	A−6
01	A−6
02	A−6
03	A−6
04	A−6
05	A−6
06	B−4
07	B−4
	A−3
	B−3
	B−3
	A−1
	B−1
	B−1
2A2	B−2
300	A−5
350	C−2
354	B−1
01	C−6
02	C−5
03	C−5
04	C−4
08	B−6
09	B−4

SYMBOL NO.	ADDRESS
L201	B−6
L202	B−5
L203	B−6
L210	B−6
L211	B−6
L212	B−6
L234	C−6
L235	C−6
L236	C−4
L237	C−4
L241	B−5
L250	B−4
L280	C−5
L281	C−5
L282	B−5
L283	C−5
L284	C−5
L285	C−6
L286	C−6
L287	C−6
L291	C−4
L294	C−4
L2A1	A−3
L2A3	B−3
L2A4	B−3
L2A5	B−2
L2B2	B−3
L2B5	B−3
L2B6	B−3

SYMBOL NO.	ADDRESS
L2B7	B−3
L2C7	B−3
L2N1	A−6
L2N3	B−6
L2N4	B−6
L2Q0	B−5
L2Q1	C−5
L2Q2	B−6
L2Q3	C−6
L2Q4	B−5
L2Q5	C−4
L2Q6	B−4
L2Q7	C−4
L300	B−5
L315	B−4
L316	B−4
L317	B−6
L318	B−6
L327	B−4
L328	B−6
L350	C−1
L354	A−1
L355	A−1
L356	B−1
L357	B−1
L360	B−1
Q201	C−6
Q202	C−6
Q203	C−6

SYMBOL NO.	ADDRESS
Q204	B−6
Q205	B−5
Q206	B−5
Q207	B−5
Q210	C−5
Q211	C−5
Q212	B−5
Q2A0	B−2
Q2A1	B−2
Q2A2	B−3
Q2B6	B−3
Q2B9	B−3
Q2C1	B−3
Q303	B−4
Q304	B−4
Q305	B−4
Q350	B−1
Q351	B−1
Q352	B−1
Q353	B−1
Q354	B−1
Q355	B−1
R201	C−6
R202	C−6
R203	B−6
R207	C−5
R217	B−6
R219	B−5
R220	B−5

SYMBOL NO.	ADDRESS
R221	B−5
R222	B−5
R223	B−5
R224	B−5
R225	C−5
R226	C−5
R227	C−5
R228	C−4
R229	C−4
R230	C−4
R231	C−4
R232	C−4
R233	C−4
R236	B−4
R237	B−5
R238	B−5
R239	B−4
R240	B−5
R241	B−5
R243	C−5
R244	C−5
R245	B−5
R249	B−6
R253	B−6
R254	B−6
R256	A−6
R257	A−6
R258	A−6
R259	B−6
R260	A−6

SYMBOL NO.	ADDRESS
R261	A−6
R262	B−6
R263	B−5
R264	B−5
R265	B−5
R266	B−5
R267	B−5
R268	B−5
R279	B−4
R280	A−4
R296	A−6
R2A0	A−3
R2A1	A−3
R2A2	A−3
R2A5	B−2
R2A6	B−2
R2A7	B−2
R2A8	B−2
R2B0	B−2
R2B1	B−2
R2B3	B−2
R2B5	B−3
R2C4	A−2
R2C9	A−2
R2D1	A−2
R2E0	B−3
R2F3	B−3
R2G1	B−3
R2H0	A−3
R2J8	A−3

SYMBOL NO.	ADDRESS
R2J9	A−3
R2K1	B−3
R2L7	B−3
R2L8	A−3
R2L9	B−3
R2M0	B−3
R2M1	B−3
R2M2	B−3
R2M3	B−3
R2M4	B−3
R2M5	A−3
R2M6	A−3
R2M7	B−3
R2N5	B−5
R2N6	B−5
R2N8	B−5
R2N9	B−5
R2P2	C−5
R2P4	C−5
R2P5	C−5
R2R0	A−5
R2R1	A−5
R2R2	A−5
R2R3	A−5
R2T1	C−6
R2T2	C−6
R2T3	C−6
R2T4	C−6
R2T5	C−6
R2T6	C−6

SYMBOL NO.	ADDRESS
R2T7	C−6
R2T8	C−6
R2T9	C−6
R2W1	C−5
R2W2	C−5
R2W3	B−5
R2W4	C−6
R2W5	C−6
R2W6	B−5
R2W7	C−6
R2W8	C−6
R300	A−5
R301	A−5
R302	A−5
R303	A−5
R304	A−5
R305	A−5
R306	A−6
R307	A−6
R308	A−5
R309	A−5
R310	A−5
R311	A−5
R312	A−6
R313	A−6
R314	A−6
R315	A−6
R320	B−6
R321	A−6
R322	B−6

SYMBOL NO.	ADDRESS
R323	B−6
R325	B−4
R326	B−4
R330	B−4
R334	B−4
R335	B−4
R336	B−4
R337	B−4
R338	B−4
R350	B−2
R351	B−2
R352	B−2
R353	B−2
R354	B−2
R356	B−2
R358	B−2
R360	B−1
R361	B−1
R362	B−1
R363	B−1
R364	B−1
R365	B−1
R366	B−1
R367	B−1
R368	B−1
R369	B−1
R370	B−1
R371	B−1
R380	B−1
R381	B−1

SYMBOL NO.	ADDRESS
R382	A−2
R383	B−1
R384	B−1
R385	A−1
R386	B−1
R387	B−1
TA	A−4
TB	B−4
TC	B−4
TF	A−5
TG	A−6
TJ	B−6
TK	A−6
X2A0	B−2
X2A1	B−2
X2A2	A−2
X2A3	A−2

PCB-MAIN (COMPONENT SIDE)

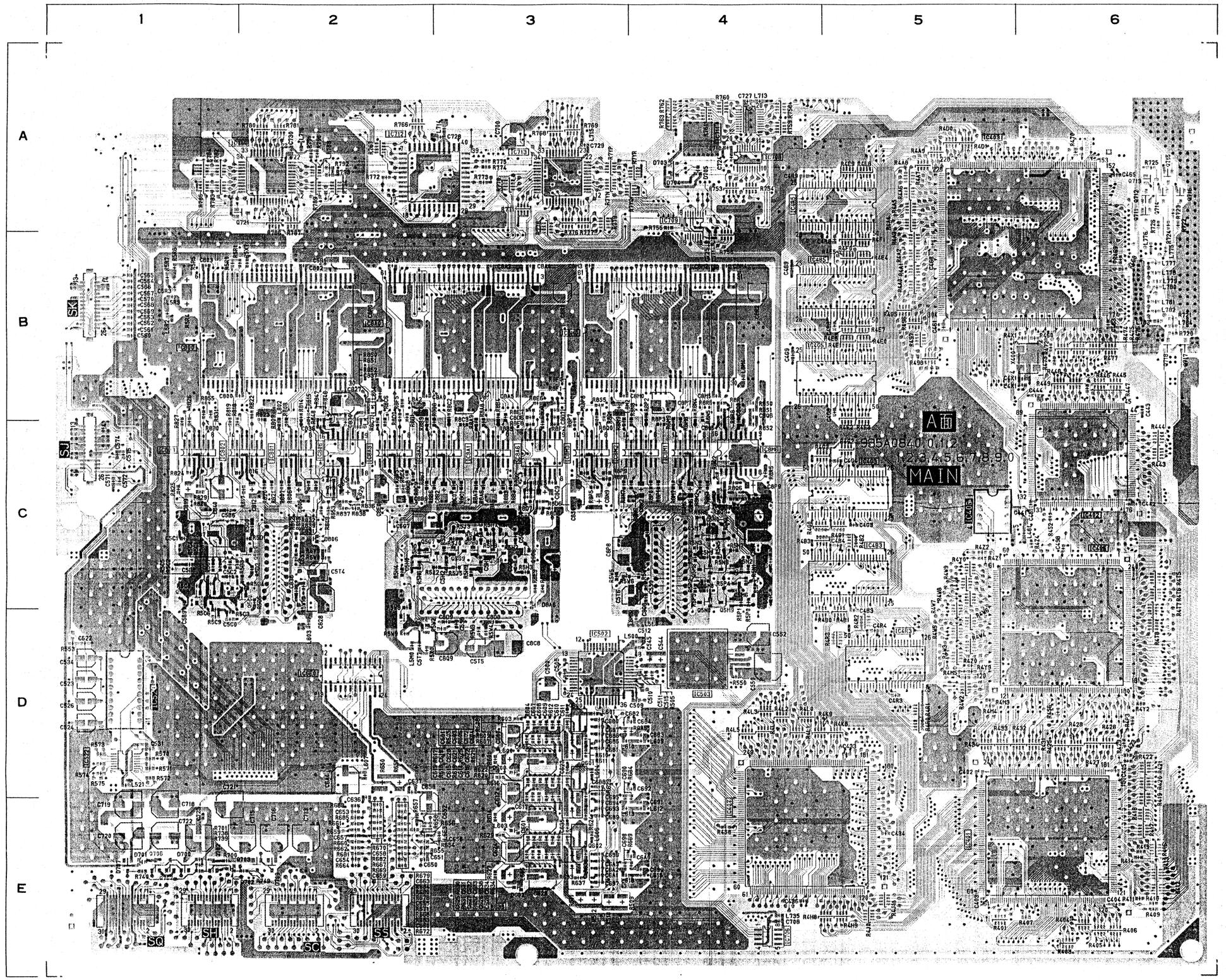

PCB-MAIN

SYMBOL NO.	ADDR
C402	D−5
C403	E−5
C404	E−6
C405	D−6
C433	D−5
C434	E−5
C436	E−4
C441	C−6
C442	C−6
C443	B−6
C444	B−6
C461	B−5
C463	B−6
C465	A−6
C468	B−5
C481	C−6
C498	C−6
C4B3	D−5
C4B4	C−5
C4B8	B−5
C4B9	B−4
C4G3	C−5
C4G4	C−5
C4G8	B−5
C4G9	B−4
C4R3	D−5
C4R4	D−5
C4R8	B−5
C4R9	A−4
C4X1	B−6
C500	D−3
C505	D−3
C509	D−4
C510	D−4
C511	D−4
C512	D−4
C515	D−4
C522	D−1
C523	D−1
C524	D−1
C526	D−1
C531	D−1
C534	D−1
C544	D−4
C545	D−4
C550	D−4
C552	D−4
C560	B−1
C561	B−1
C562	B−1
C563	B−1
C564	B−1
C565	B−1
C566	B−1
C567	B−1
C568	B−1
C569	B−1
C570	B−1
C571	C−1
C572	C−1
C574	C−1
C575	C−1
C5B6	C−1
C5B7	C−1
C5B8	C−1
C5B9	C−1
C5C0	D−1

PCB-MAIN (SOLDER SIDE)

PCB-MAIN

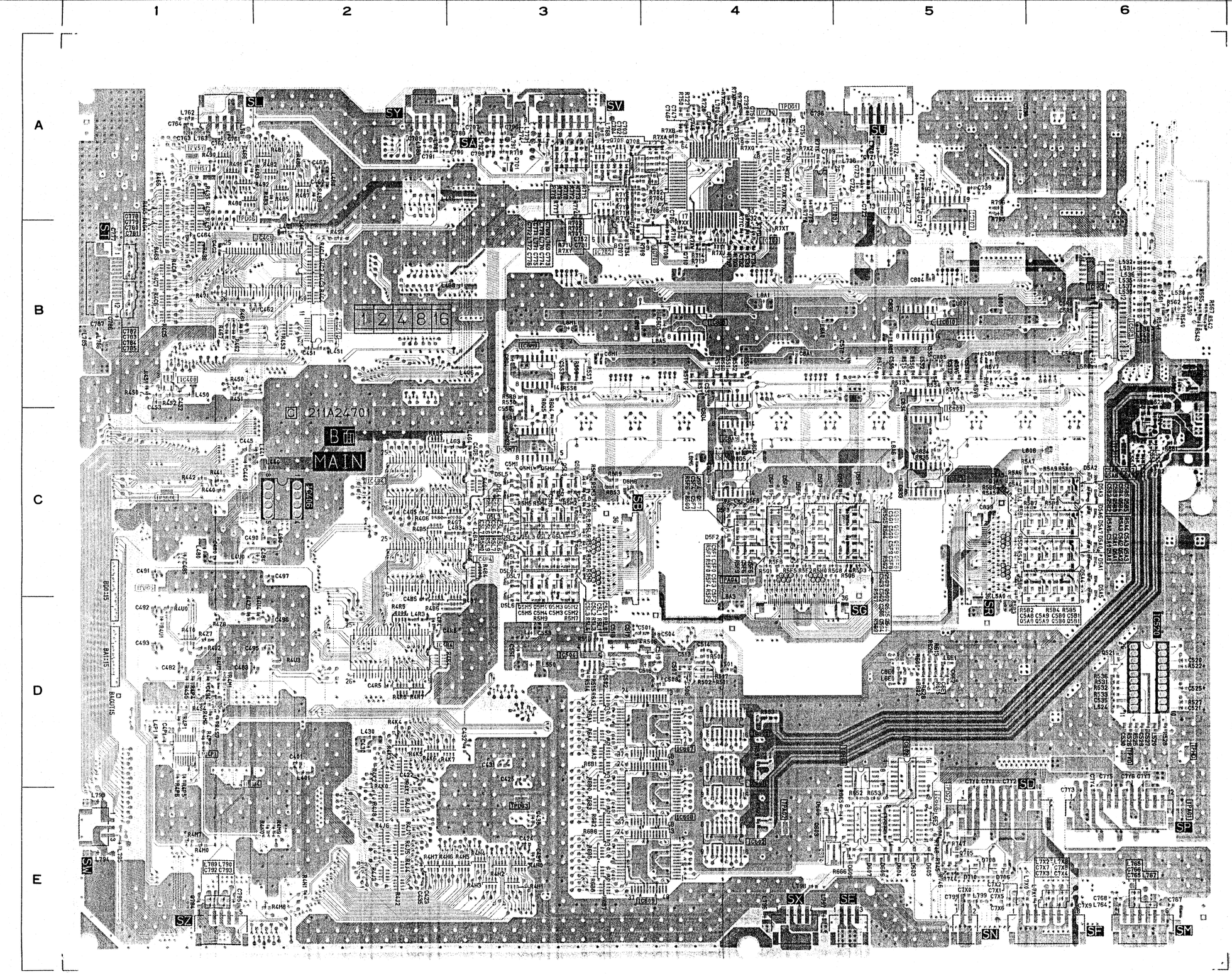

SYMBOL NO.	ADDR
C401	D−2
C422	D−2
C423	E−2
C424	E−3
C425	D−3
C430	D−2
C431	D−3
C432	D−3
C435	E−2
C437	E−3
C438	E−3
C440	C−1
C445	C−1
C460	A−2
C462	B−2
C464	B−1
C466	A−1
C467	A−2
C480	C−1
C482	D−1
C483	D−2
C484	C−2
C485	C−1
C490	C−2
C491	C−1
C492	D−1
C493	D−1
C494	D−1
C495	D−2
C496	D−2
C497	C−2
C4B5	D−2
C4B6	C−3
C4C1	B−2
C4C2	B−1
C4G5	C−2
C4G6	C−3
C4P1	D−1
C4R5	D−2
C4R6	D−2
C4S1	B−2
C4S2	B−1
C4S3	B−1
C501	D−4
C502	D−3
C504	D−4
C506	D−4
C507	D−4
C508	D−4
C513	D−4
C514	D−4
C516	D−4
C517	D−3
C518	D−3
C519	D−4
C520	D−6
C521	D−6
C525	D−6
C527	D−6
C529	D−6
C530	D−6
C532	C−6
C533	C−6
C535	D−6
C551	D−3
C553	D−3
C5A0	C−6

PCB-MAIN (COMPONENT SIDE)

SYMBOL NO.	ADDRESS
C402	D−5
C403	E−5
C404	E−6
C405	D−6
C433	D−5
C434	E−5
C436	E−4
C441	C−6
C442	C−6
C443	B−6
C444	B−6
C461	B−5
C463	B−6
C465	A−6
C468	B−5
C481	C−6
C498	C−6
C4B3	D−5
C4B4	C−5
C4B8	B−5
C4B9	B−4
C4G3	C−5
C4G4	C−5
C4G8	B−5
C4G9	B−4
C4R3	D−5
C4R4	D−5
C4R8	B−5
C4R9	A−4
C4X1	B−6
C500	D−3
C505	D−3
C509	D−4
C510	D−4
C511	D−4
C512	D−4
C515	D−4
C522	D−1
C523	D−1
C524	D−1
C526	D−1
C531	D−1
C534	D−1
C544	D−4
C545	D−4
C550	D−4
C552	D−4
C560	B−1
C561	B−1
C562	B−1
C563	B−1
C564	B−1
C565	B−1
C566	B−1
C567	B−1
C568	B−1
C569	B−1
C570	B−1
C571	C−1
C572	C−1
C574	C−1
C575	C−1
C5B6	C−1
C5B7	C−1
C5B8	C−1
C5B9	C−1
C5C0	D−1

SYMBOL NO.	ADDRESS
C5C1	C−1
C5C2	C−1
C5G6	C−3
C5G7	C−2
C5G8	C−3
C5G9	C−3
C5H0	C−2
C5H1	C−3
C5H2	C−3
C5M6	C−4
C5M7	C−4
C5M8	C−4
C5M9	C−4
C5N0	C−4
C5N1	C−4
C5N2	C−4
C5R1	B−2
C5R3	B−1
C5S7	C−2
C5S8	D−3
C5S9	C−4
C5T4	C−2
C5T5	D−3
C5T6	C−4
C5T7	D−2
C600	D−3
C601	D−3
C602	D−3
C603	D−3
C604	D−3
C605	D−3
C607	D−3
C608	D−3
C609	D−3
C610	D−3
C611	D−3
C612	D−3
C613	E−3
C614	E−3
C615	E−3
C616	E−3
C617	E−3
C619	D−3
C620	D−3
C621	D−3
C622	D−3
C623	D−3
C624	E−3
C625	E−3
C626	E−3
C627	E−3
C628	E−3
C629	E−3
C631	E−3
C632	E−3
C633	E−3
C634	E−3
C635	E−3
C636	E−2
C637	D−2
C638	E−2
C650	E−2
C651	E−2
C652	E−2
C653	E−2
C654	E−2
C655	E−2

SYMBOL NO.	ADDRESS
C656	E−2
C657	E−2
C658	E−2
C659	E−2
C660	E−2
C663	E−2
C680	D−3
C681	D−3
C682	D−3
C683	D−4
C684	D−4
C685	D−3
C686	D−3
C687	D−3
C688	D−3
C689	E−3
C690	E−3
C691	E−4
C692	D−4
C693	E−3
C694	E−3
C695	E−3
C696	E−3
C697	E−3
C698	E−3
C699	E−4
C6A0	E−4
C6A1	E−3
C6A2	E−3
C6A3	E−3
C6A4	D−2
C700	A−3
C708	E−4
C713	E−2
C715	E−2
C716	E−2
C718	E−1
C719	E−1
C720	E−1
C721	E−1
C722	E−1
C723	E−1
C724	A−4
C725	B−4
C727	A−4
C728	A−3
C729	A−3
C730	A−2
C800	B−2
C802	B−2
C803	B−1
C806	C−2
C812	C−2
C819	C−1
C827	B−2
C828	C−2
C829	C−2
C830	C−2
C831	C−2
C836	C−2
C837	C−2
C838	C−2
C840	C−1
C8A0	B−2
C8A2	B−3
C8A3	B−2
C8A4	B−3

SYMBOL NO.	ADDRESS
C8A5	B−3
C8A6	C−3
C8B2	C−3
C8B9	C−2
C8C7	B−3
C8C8	D−3
C8C9	C−3
C8D0	C−3
C8D1	C−3
C8D6	B−3
C8D7	B−3
C8D8	D−3
C8D9	D−3
C8E0	C−2
C8M0	B−3
C8M2	B−4
C8M3	B−3
C8M4	B−4
C8M5	B−4
C8M6	C−4
C8N2	C−4
C8N9	C−3
C8P7	B−4
C8P8	C−4
C8P9	C−4
C8Q0	C−4
C8Q1	C−4
C8Q5	C−4
C8Q6	B−4
C8Q7	C−4
C8Q8	C−4
C8Q9	D−3
C8R0	B−2
C8R1	B−3
C8R2	B−4
C8S0	C−3
D600	D−3
D601	E−3
D602	E−3
D700	E−1
D701	E−1
D702	E−1
D703	A−4
D704	A−4
D705	A−4
D707	E−1
D709	E−2
D806	C−2
D8A6	C−3
IC401	E−6
IC402	C−6
IC403	B−6
IC405	D−6
IC406	C−5
IC407	E−4
IC4B3	C−5
IC4B5	B−5
IC4G3	C−5
IC4G5	B−5
IC4R3	D−5
IC4R5	A−5
IC502	D−3
IC503	D−4
IC520	D−1
IC522	D−1

SYMBOL NO.	ADDRESS
IC6E0	D−2
IC706	E−4
IC708	A−4
IC709	A−4
IC711	A−4
IC712	A−3
IC713	A−3
IC714	A−2
IC800	B−2
IC801	C−2
IC802	C−2
IC803	C−1
IC806	C−2
IC8A0	B−3
IC8A1	C−3
IC8A2	C−3
IC8A3	C−2
IC8A6	C−3
IC8M0	B−4
IC8M1	C−4
IC8M2	C−4
IC8M3	C−3
IC8M6	C−4
L481	C−6
L4X1	B−6
L500	D−4
L521	D−1
L5F0	C−3
L5L0	D−4
L5M0	D−2
L5R2	B−1
L5R3	B−1
L600	D−3
L601	D−3
L603	E−3
L604	D−3
L605	E−3
L606	E−3
L607	D−2
L609	D−4
L610	D−4
L612	E−4
L613	E−4
L615	E−4
L616	E−4
L6E3	E−3
L710	A−4
L711	B−4
L713	A−4
L714	A−3
L715	A−3
L716	A−2
L735	E−4
L775	B−6
L776	B−6
L777	B−6
L778	B−6
L779	B−6
L780	B−6
L781	B−6
L782	B−6
L783	B−6
L784	B−6
L802	B−2
L803	D−2
L804	B−2

SYMBOL NO.	ADDRESS
L8A2	B−2
L8A4	B−3
L8M2	B−3
L8M3	D−4
L8M4	B−4
Q5B6	C−1
Q5B7	C−1
Q5B8	C−1
Q5B9	C−2
Q5C0	C−2
Q5G6	C−3
Q5G7	C−2
Q5G8	C−3
Q5G9	C−3
Q5H0	C−3
Q5M6	C−4
Q5M7	C−4
Q5M8	C−4
Q5M9	C−4
Q5N0	C−4
Q5R3	D−2
Q5R4	D−2
Q600	D−3
Q601	D−3
Q602	E−3
Q702	E−1
Q703	E−2
Q706	E−1
Q707	E−1
Q711	A−6
Q712	A−6
Q713	A−6
Q714	A−6
Q715	A−6
Q716	A−6
Q717	B−6
Q718	B−6
Q721	A−2
R401	E−5
R403	E−6
R404	E−6
R405	E−6
R406	E−6
R407	E−6
R409	E−6
R410	E−6
R411	E−6
R412	E−6
R413	E−6
R414	E−6
R415	E−6
R416	E−6
R417	E−6
R418	E−6
R419	E−6
R420	D−6
R421	D−6
R422	D−6
R423	D−6
R425	D−6
R426	D−6
R427	D−6
R428	D−6
R429	D−6
R431	D−6

SYMBOL NO.	ADDRESS
R432	D−6
R433	D−5
R434	D−5
R443	C−6
R444	C−6
R445	B−6
R446	B−6
R447	B−6
R448	B−6
R449	B−6
R452	C−6
R460	B−6
R468	B−6
R469	B−6
R470	A−6
R472	B−6
R473	B−6
R474	B−6
R475	B−6
R476	B−6
R477	B−6
R495	B−5
R496	B−5
R497	B−5
R498	B−5
R4A0	B−5
R4A1	B−5
R4A2	B−5
R4A3	B−5
R4A4	A−5
R4A5	A−5
R4A6	A−5
R4A7	A−5
R4A8	A−5
R4A9	A−5
R4B0	D−5
R4B1	D−5
R4B2	C−5
R4B3	C−5
R4D0	A−5
R4D1	A−5
R4E0	B−5
R4E1	B−5
R4E2	B−5
R4E3	B−5
R4E4	B−5
R4E5	B−5
R4E6	B−5
R4E7	B−5
R4E8	A−5
R4E9	A−5
R4F0	B−5
R4F1	B−5
R4G0	C−5
R4G1	C−5
R4G2	C−5
R4G3	C−5
R4H8	E−5
R4H9	E−5
R4J0	E−5
R4J1	E−5
R4K8	D−5
R4K9	D−5
R4L0	D−4
R4L1	D−4
R4L2	D−4
R4L3	D−4

SYMBOL NO.	ADDRESS
R4L4	D−4
R4L5	D−4
R4M3	D−5
R4M4	D−5
R4M5	D−5
R4P3	D−6
R4R0	D−5
R4R1	D−5
R4R2	D−5
R4R3	D−5
R4S6	D−6
R4S8	E−4
R4T5	C−6
R4T6	C−6
R4T7	D−6
R4T8	D−6
R4W2	D−5
R4W3	D−5
R4W4	D−5
R4W5	D−5
R4W6	D−5
R4W7	D−5
R4W8	C−5
R4W9	C−5
R4X1	B−6
R4Y0	C−5
R4Y2	D−6
R4Y9	D−5
R4Z0	D−5
R4Z1	C−5
R4Z2	C−5
R4Z4	C−6
R505	D−4
R509	E−3
R510	E−3
R511	E−3
R512	E−3
R550	D−4
R553	D−1
R570	D−1
R571	D−1
R572	D−1
R573	D−1
R574	D−1
R575	D−1
R5A1	C−1
R5C1	C−1
R5C2	C−1
R5C3	D−1
R5C4	C−1
R5C5	C−1
R5C6	D−1
R5C7	C−1
R5C8	C−1
R5C9	D−1
R5D0	C−2
R5D1	C−2
R5D2	C−2
R5D3	C−2
R5D4	C−2
R5D5	C−2
R5H1	C−3
R5H2	C−3
R5H3	C−3
R5H4	C−2
R5H5	C−2
R5H6	C−2

SYMBOL NO.	ADDRESS
R5H7	C−3
R5H8	C−3
R5H9	C−3
R5J0	C−3
R5J1	C−3
R5J2	C−3
R5J3	C−3
R5J4	C−3
R5J5	C−3
R5N1	C−4
R5N2	C−4
R5N3	C−4
R5N4	C−4
R5N5	C−4
R5N6	C−4
R5N7	C−4
R5N8	C−4
R5N9	C−4
R5P0	C−4
R5P1	C−4
R5P2	C−4
R5P3	C−4
R5P4	C−4
R5P5	C−4
R5R0	B−1
R5R1	B−2
R5R4	B−1
R5R5	B−1
R5R6	B−1
R5R7	B−1
R5V9	C−2
R5W0	C−2
R5W1	C−2
R5W2	D−3
R5W3	D−3
R5W4	D−3
R5W5	C−3
R5W6	C−4
R5W7	C−4
R5W8	D−2
R5W9	D−2
R5X0	D−2
R5X7	B−2
R601	D−3
R603	D−3
R604	D−3
R605	D−3
R606	D−3
R607	D−3
R608	D−3
R609	D−3
R610	D−3
R611	D−3
R612	D−3
R614	E−3
R616	D−3
R617	D−3
R618	E−3
R619	E−3
R620	E−3
R621	D−3
R622	E−3
R623	E−3
R624	E−3
R625	D−3
R627	E−3
R629	E−3

SYMBOL NO.	ADDRESS
R630	E−3
R631	E−3
R632	E−3
R633	E−3
R634	E−3
R635	E−3
R636	E−3
R637	E−3
R638	E−3
R650	D−2
R651	D−2
R654	E−2
R655	E−2
R656	E−2
R657	E−2
R658	E−2
R659	E−2
R660	E−2
R661	E−2
R662	E−2
R663	E−2
R664	E−2
R667	E−2
R668	E−2
R669	E−2
R670	E−2
R671	E−2
R672	E−2
R678	E−2
R679	E−2
R680	E−2
R681	E−2
R700	E−1
R701	E−1
R720	B−6
R721	B−6
R722	A−6
R723	A−6
R724	A−6
R725	A−6
R726	A−6
R738	E−1
R739	E−1
R740	E−1
R743	E−2
R753	A−4
R754	A−4
R755	A−4
R756	B−4
R758	A−4
R759	A−4
R760	A−4
R761	A−4
R762	A−4
R763	A−4
R766	A−2
R767	A−2
R768	A−3
R769	A−3
R770	A−3

SYMBOL NO.	ADDRESS
R771	A−3
R772	A−2
R773	A−3
R774	A−3
R775	A−3
R776	A−3
R777	A−3
R778	A−3
R779	A−3
R780	A−2
R781	A−2
R782	A−1
R783	A−1
R784	A−1
R785	A−1
R786	A−2
R787	A−2
R788	A−2
R789	A−2
R790	A−2
R791	A−2
R792	A−2
R793	A−2
R794	A−2
R7YN	A−3
R7YP	A−3
R7YQ	A−4
R7YR	A−4
R806	C−2
R807	C−2
R808	C−2
R809	C−2
R812	C−2
R813	C−2
R814	B−2
R815	B−2
R816	C−2
R817	C−2
R818	C−1
R819	C−1
R820	C−2
R821	C−2
R822	B−2
R823	C−2
R824	C−1
R825	C−1
R826	C−1
R827	C−1
R828	C−1
R829	C−1
R830	B−1
R831	B−1
R832	C−2
R836	C−2
R837	C−2
R838	C−2
R839	C−2
R845	C−2
R846	C−2
R847	C−2
R848	C−2
R849	C−2
R850	B−2
R851	B−2
R852	C−2
R853	C−2
R855	B−1

SYMBOL NO.	ADDRESS
R8A6	C−3
R8A7	C−3
R8A8	C−3
R8A9	C−3
R8B2	C−3
R8B3	C−3
R8B4	B−3
R8B5	B−3
R8B6	C−3
R8B7	C−2
R8B8	C−3
R8B9	C−2
R8C0	C−3
R8C1	C−3
R8C2	B−3
R8C3	C−3
R8C4	C−2
R8C5	C−2
R8C6	C−2
R8C7	C−2
R8C8	C−2
R8C9	C−2
R8D0	B−2
R8D1	B−2
R8D2	C−3
R8D6	C−3
R8D7	C−3
R8D8	C−3
R8D9	C−3
R8E5	C−3
R8E6	B−3
R8E7	B−3
R8E8	C−3
R8E9	C−3
R8F0	B−3
R8F1	B−3
R8F2	C−3
R8F3	C−3
R8F5	B−2
R8M6	C−4
R8M7	C−4
R8M8	C−4
R8M9	C−4
R8N2	C−4
R8N3	C−4
R8N4	B−4
R8N5	B−4
R8N6	C−4
R8N7	C−3
R8N8	C−4
R8N9	C−3
R8P0	C−4
R8P1	C−4
R8P2	B−4
R8P3	C−4
R8P4	C−3
R8P5	C−3
R8P6	C−3
R8P7	C−3
R8P8	C−3
R8P9	C−3
R8Q0	B−3
R8Q1	B−3
R8Q2	C−4
R8Q6	C−4
R8Q7	C−4
R8Q8	C−4

SYMBOL NO.	ADDRESS
R8Q9	C−4
R8R5	C−4
R8R6	B−4
R8R7	B−4
R8R8	B−4
R8S0	B−4
R8S1	B−4
R8S2	C−4
R8S5	B−3
SC	E−2
SH	E−1
SJ	C−1
SK	B−1
SQ	E−1
SS	E−2
X400	B−6

C5B9	C−1	C654	E−2	C8A3	B−2	IC520	D−1	L803	D−2	R429	D−6	R4L2	D−4	R5H5	C−2	R627	E−3	R769	A−3	R853	C−2	R8Q7	C−4		
C5C0	D−1	C655	E−2	C8A4	B−3	IC522	D−1	L804	B−2	R431	D−6	R4L3	D−4	R5H6	C−2	R629	E−3	R770	A−3	R855	B−1	R8Q8	C−4		

PCB-MAIN〔SOLDER SIDE〕

SYMBOL NO.	ADDRESS	SYMBOL NO.	ADDRESS	SYMBOL NO.	ADDRESS	SYMBOL NO.	ADDRESS	SYMBOL NO.	ADDRESS	SYMBOL NO.	ADDRESS	SYMBOL NO.	ADDRESS	SYMBOL NO.	ADDRESS	SYMBOL NO.	ADDRESS	SYMBOL NO.	ADDRESS	SYMBOL NO.	ADDRESS	SYMBOL NO.	ADDRESS
C401	D−2	C5A1	C−6	C706	B−4	C7X8	E−6	IC406	C−2	L536	B−6	Q5A0	C−6	R462	B−1	R4N1	E−2	R5A7	C−6	R5S9	B−3	R7XN	B−4	TPAG2	E−4
C422	D−2	C5A2	C−6	C707	B−3	C7X9	E−6	IC4B4	C−2	L537	B−6	Q5A1	C−6	R463	B−1	R4P1	D−1	R5A8	C−5	R5T0	B−4	R7XP	B−4	TPAG3	B−6
C423	E−2	C5A3	C−6	C709	A−4	C7Y0	E−5	IC4C1	B−2	L538	B−6	Q5A2	C−6	R464	B−1	R4P2	D−1	R5A9	C−6	R5T1	B−4	R7XR	B−4	TPAG4	C−4
C424	E−3	C5A4	C−6	C712	A−5	C7Y1	E−5	IC4G4	C−2	L539	B−6	Q5A3	C−6	R465	A−1	R4P4	D−1	R5B0	C−6	R5T2	B−4	R7XT	B−4	TPDG1	A−4
C425	D−3	C5A5	C−6	C731	A−4	C7Y2	E−5	IC4P1	D−1	L549	B−6	Q5A4	C−6	R466	A−1	R4P5	D−1	R5B1	C−5	R5T3	B−5	R7XU	B−4	TPDG2	E−5
C430	D−2	C5A6	C−6	C732	B−4	C7Y3	E−6	IC4R4	D−2	L550	D−3	Q5A5	C−6	R467	B−1	R4P6	D−1	R5B2	C−6	R5T4	B−5	R7XW	B−4	TPDG3	E−3
C431	D−3	C5A7	C−6	C733	B−4	C7Y4	E−6	IC504	D−3	L551	C−6	Q5A6	C−6	R471	B−1	R4R4	D−2	R5B3	D−5	R5T5	B−5	R7XX	B−4	TPDG4	D−1
C432	D−3	C5A8	C−6	C734	B−4	C7Y5	E−6	IC520	D−6	L552	C−6	Q5A7	C−6	R480	A−1	R4R5	D−2	R5B4	C−6	R5V4	B−5	R7XY	A−3	TPDG5	C−1
C435	E−2	C5A9	C−6	C735	A−4	C7Y6	E−6	IC5R2	B−6	L554	C−6	Q5A8	D−6	R481	A−2	R4R6	D−2	R5B5	C−6	R5V5	B−5	R7XZ	A−4	TPDG6	B−2
C437	E−3	C5B0	C−6	C736	A−4	C7Y7	E−6	IC5R3	B−6	L555	C−6	Q5A9	D−6	R482	A−2	R4R7	D−2	R5B6	C−5	R5V6	B−5	R7Y2	A−3	TPHD	D−6
C438	E−3	C5B1	C−6	C737	A−4	C7Z0	A−5	IC600	D−4	L5A0	D−5	Q5B0	D−6	R483	A−2	R4S0	B−1	R5B7	C−6	R5V7	B−5	R7Y3	A−3	TPHSY	A−1
C440	C−1	C5B2	C−6	C738	A−5	C7Z1	A−5	IC601	D−4	L5R0	B−6	Q5B1	D−6	R485	A−2	R4S1	B−1	R5B8	C−5	R5V8	B−5	R7Y4	A−3	TPS0	B−6
C445	C−1	C5B3	C−6	C739	A−5	C7Z2	A−5	IC602	E−4	L6E0	D−5	Q5B2	C−6	R486	A−2	R4S2	B−1	R5B9	C−6	R600	D−5	R7Y5	A−3	TPS1	C−6
C460	A−2	C5B4	C−6	C746	A−4	C7Z3	A−5	IC603	D−5	L6E1	D−5	Q5B3	C−6	R487	A−2	R4S3	B−2	R5C0	C−5	R602	D−5	R7Y6	A−3	TPSEOL	C−1
C462	B−2	C5B5	C−6	C747	A−4	C801	B−5	IC604	D−5	L6E2	E−5	Q5B4	C−6	R488	A−2	R4S4	D−1	R5F0	C−4	R613	D−5	R7Y7	A−3	TPVD	D−6
C464	B−1	C5F0	C−4	C748	A−4	C804	B−5	IC606	E−5	L700	A−4	Q5B5	C−6	R490	A−1	R4S5	D−1	R5F1	C−4	R615	D−5	R7Y8	A−3	TPVSY	A−1
C466	A−1	C5F1	C−4	C749	A−4	C805	B−5	IC607	D−4	L734	B−3	Q5F0	C−4	R491	A−1	R4S7	D−1	R5F2	C−4	R626	D−5	R7Y9	A−3		
C467	A−2	C5F2	C−4	C750	A−4	C833	C−5	IC608	E−4	L736	A−5	Q5F1	C−4	R492	A−1	R4T0	D−1	R5F3	C−4	R628	D−5	R7YA	A−4		
C480	C−1	C5F3	C−4	C751	A−4	C834	C−5	IC609	E−4	L739	A−5	Q5F2	C−4	R493	A−1	R4U0	D−1	R5F4	C−4	R652	E−5	R7YB	A−4		
C482	D−1	C5F4	C−4	C752	A−4	C835	B−5	IC700	A−4	L761	A−1	Q5F3	C−4	R499	B−2	R4U1	D−1	R5F5	C−4	R653	E−5	R7YC	B−4		
C483	D−2	C5F5	C−4	C761	A−1	C839	C−5	IC701	B−4	L762	A−1	Q5F4	C−4	R4B4	C−3	R4U2	D−1	R5F6	C−4	R665	E−5	R7YD	B−4		
C484	C−2	C5F6	C−4	C762	A−1	C8A1	B−4	IC702	B−3	L763	A−1	Q5F5	C−4	R4B5	C−2	R4U3	D−2	R5F7	C−4	R666	E−5	R7YE	A−3		
C485	C−1	C5F7	C−4	C763	A−1	C8D3	C−4	IC703	A−4	L764	E−6	Q5F6	C−4	R4B6	D−2	R4U4	D−2	R5F8	C−4	R6A1	D−3	R7YF	A−3		
C490	C−2	C5F8	C−5	C764	A−1	C8D4	C−4	IC707	A−5	L765	E−6	Q5F7	C−4	R4B7	D−3	R4U5	D−1	R5F9	C−4	R6A2	D−3	R7YG	A−3		
C491	C−1	C5F9	C−5	C765	E−6	C8D5	B−4	IC7Z0	A−5	L767	E−6	Q5F8	C−5	R4C1	B−2	R4Z7	D−1	R5G0	C−4	R6A3	D−3	R7YH	A−3		
C492	D−1	C5G0	C−5	C766	E−6	C8M1	B−3	IC807	C−5	L768	A−3	Q5F9	C−5	R4C2	B−2	R4Z8	D−1	R5G1	C−4	R6A4	D−3	R7YJ	B−3		
C493	D−1	C5G1	C−5	C767	E−6	C8Q3	C−3	IC809	C−5	L769	A−3	Q5G0	C−5	R4C3	B−2	R4Z9	D−1	R5G2	C−5	R6B0	E−3	R7YK	A−4		
C494	D−1	C5G2	C−4	C768	E−6	C8Q4	B−3	IC810	B−5	L770	A−3	Q5G1	C−5	R4C4	B−2	R501	D−4	R5G3	C−5	R6B1	D−3	R7YU	A−4		
C495	D−2	C5G3	C−4	C769	A−3			IC8A7	C−4	L771	A−3	Q5G2	C−4	R4C5	B−1	R502	D−4	R5G4	C−5	R6B2	E−3	R7Z1	A−5		
C496	D−2	C5G4	C−4	C770	A−3	D5A0	C−6	IC8A9	C−4	L772	A−3	Q5G3	C−4	R4C6	B−1	R506	D−4	R5G5	C−5	R6B3	E−3	R7Z2	A−5		
C497	C−2	C5G5	C−4	C771	A−3	D5A1	C−6	IC8B0	B−4	L773	A−3	Q5G4	C−4	R4C7	B−1	R507	D−4	R5G6	C−5	R6B5	E−3	R7Z4	A−5		
C4B5	D−2	C5L0	C−3	C772	A−3	D5A2	C−6	IC8M7	C−3	L774	A−3	Q5G5	C−4	R4C8	B−1	R508	D−4	R5G7	C−4	R6B6	E−3	R834	C−5		
C4B6	C−3	C5L1	C−3	C773	A−3	D5A3	C−6	IC8M9	B−3	L785	B−1	Q5L0	C−3	R4G4	C−3	R4Z4	D−1	R5G8	C−5	R6B7	E−3	R835	C−5		
C4C1	B−2	C5L2	C−3	C774	A−3	D5A4	C−6			L786	B−1	Q5L1	C−3	R4G5	C−2	R515	D−3	R5G9	C−4	R6B8	E−3	R8D4	C−4		
C4C2	B−1	C5L3	C−3	C775	A−3	D5A5	C−6			L787	A−2	Q5L2	C−3	R4G6	C−2	R516	D−3	R5H0	C−4	R702	A−4	R8D5	C−4		
C4G5	C−2	C5L4	C−3	C776	A−3	D5A6	C−6	L401	D−2	L788	A−2	Q5L3	C−3	R4G7	C−3	R520	C−6	R5L0	C−3	R703	A−4	R8Q4	C−3		
C4G6	C−3	C5L5	C−3	C777	B−1	D5A7	C−6	L430	D−2	L789	E−1	Q5L4	C−3	R4H0	E−3	R521	C−6	R5L1	C−3	R704	A−4	R8Q5	C−3		
C4P1	D−1	C5L6	C−3	C778	B−1	D5F0	C−4	L440	C−2	L790	E−1	Q5L5	C−3	R4H1	E−3	R522	D−6	R5L2	C−3	R705	A−4	R8R9	C−3		
C4R5	D−2	C5L7	C−3	C779	B−1	D5F1	C−4	L441	C−2	L791	A−3	Q5L6	C−3	R4H2	E−3	R525	D−6	R5L3	C−3	R706	A−4	R8S3	C−3		
C4R6	D−2	C5L8	C−3	C780	B−1	D5F2	C−4	L460	A−2	L792	A−3	Q5L7	C−3	R4H3	E−3	R526	D−6	R5L4	C−3	R707	A−4				
C4S1	B−2	C5L9	C−3	C781	B−1	D5F3	C−4	L480	C−1	L793	E−1	Q5L8	C−3	R4H4	E−3	R527	D−6	R5L5	C−3	R708	B−4	SA	A−3		
C4S2	B−1	C5M0	C−3	C782	B−1	D5F4	C−5	L490	C−2	L794	E−1	Q5L9	C−3	R4H5	E−3	R528	D−6	R5L6	C−3	R709	B−3	SB	C−3		
C4S3	B−1	C5M1	C−3	C783	B−1	D5F5	C−5	L4B3	C−3	L795	E−1	Q5M0	C−3	R4H6	E−3	R531	D−6	R5L7	C−3	R710	B−4	SC	E−5		
C501	D−4	C5M2	C−3	C784	B−1	D5F6	C−4	L4B4	C−3	L796	E−4	Q5M1	C−3	R4H7	E−2	R532	D−6	R5L8	C−3	R713	B−4	SD	E−5		
C502	D−3	C5M3	C−3	C785	B−1	D5F7	C−4	L4B6	B−3	L797	E−4	Q5M2	C−3	R4J2	E−2	R533	D−6	R5L9	C−3	R714	B−4	SE	E−5		
C504	D−4	C5M4	C−3	C786	B−1	D5L0	C−3	L4C1	B−2	L798	E−4	Q5M3	C−3	R4J3	E−2	R536	D−6	R5M0	C−3	R719	A−3	SF	E−6		
C506	D−4	C5M5	C−3	C787	B−1	D5L1	C−3	L4G3	C−3	L799	E−5	Q5M4	C−3	R4J4	E−2	R540	B−6	R5M1	C−3	R727	A−4	SG	D−4		
C507	D−4	C5R4	B−6	C788	A−2	D5L2	C−3	L4G4	C−3	L7X0	E−5	Q5M5	C−3	R4J5	E−2	R541	B−6	R5M2	C−3	R728	A−4	SH	E−6		
C508	D−4	C5R5	B−6	C789	A−2	D5L3	C−3	L4G6	B−3	L7X1	E−6	Q603	E−4	R4J6	E−2	R542	B−6	R5M3	C−3	R744	E−5	SJ	C−6		
C513	D−4	C5R6	B−6	C790	A−2	D5L4	C−3	L4P1	D−1	L7X2	E−6	Q604	E−5	R4J7	E−2	R543	B−6	R5M4	C−3	R745	E−5	SK	B−6		
C514	D−4	C5S0	C−3	C791	A−2	D5L5	C−3	L4R3	D−2	L7X3	E−6	Q701	A−3	R4J8	E−2	R561	B−6	R5M5	C−3	R746	E−5	SL	A−1		
C516	D−4	C5S1	B−4	C792	E−1	D5L6	D−3	L4R4	D−2	L7Z0	A−5	Q704	E−5	R4J9	E−2	R562	B−6	R5M6	C−3	R747	E−5	SM	E−6		
C517	D−3	C5S2	B−5	C793	E−1	D5L7	C−3	L4R6	A−3	L800	B−5	Q705	E−5	R4K0	E−2	R565	B−6	R5M7	D−3	R748	E−5	SN	E−5		
C518	D−3	C5S3	B−3	C794	E−1	D603	E−5	L4S0	B−1	L801	B−5	Q708	A−3	R4K1	E−2	R567	B−6	R5M8	C−3	R750	A−4	SP	E−6		
C519	D−4	C5S4	B−4	C795	E−1	D604	E−5	L4S1	B−2	L805	B−5	Q709	A−3	R4K2	D−2	R580	B−6	R5M9	D−3	R795	A−5	SQ	E−6		
C520	D−6	C5S5	B−5	C796	A−3	D605	E−5	L4U0	C−1	L806	C−6	Q710	B−4	R4K3	D−2	R581	C−6	R5N0	C−3	R796	A−5	SR	C−5		
C521	D−6	C5T2	B−5	C797	A−3	D606	E−5	L501	D−4	L8A0	B−4			R4K4	D−2	R582	C−6	R5R8	B−3	R7XA	A−4	SS	E−5		
C525	D−6	C5T3	B−5	C798	A−3	D607	E−5	L520	D−6	L8A1	B−4	R435	A−1	R4K5	D−2	R583	B−6	R5R9	C−3	R7XB	A−4	ST	B−1		
C527	D−6	C5T8	B−5	C799	E−5	D608	E−4	L522	C−6	L8A3	D−4	R436	A−1	R4K6	D−2	R591	D−4	R5S0	B−3	R7XC	A−4	SU	A−5		
C529	D−6	C6E0	D−5	C7X0	E−5	D609	E−5	L523	C−6	L8A5	B−4	R437	B−1	R4K7	D−3	R592	E−4	R5S1	B−4	R7XD	A−4	SV	A−3		
C530	D−6	C6E1	D−5	C7X1	E−6	D706	E−5	L524	D−6	L8A6	C−5	R438	B−1	R4M0	E−1	R593	D−4	R5S2	B−4	R7XE	A−4	SW	E−1		
C532	C−6	C6E2	D−5	C7X2	E−6	D708	E−5	L530	B−6	L8M0	B−4	R440	C−1	R4M1	D−1	R5A0	C−6	R5S3	B−4	R7XG	A−4	SX	E−4		
C533	C−6	C701	A−4	C7X3	E−6	D710	E−5	L531	B−6	L8M1	B−3	R441	C−1	R4M6	D−1	R5A2	C−5	R5S4	B−5	R7XH	A−4	SY	A−2		
C535	D−6	C702	A−4	C7X4	E−6	D8M6	C−3	L532	B−6	L8M6	C−4	R442	C−1	R4M7	E−1	R5A3	C−6	R5S5	B−5	R7XJ	A−4	SZ	E−1		
C551	D−3	C703	A−4	C7X5	E−5			L533	B−6			R450	B−1	R4M8	E−2	R5A4	C−6	R5S6	B−5	R7XK	A−4				
C553	D−3	C704	A−4	C7X6	E−5	IC400	B−1	L534	B−6	Q520	C−6	R451	B−1	R4M9	E−2	R5A5	C−5	R5S7	B−3	R7XL	A−4	TP700	A−4		
C5A0	C−6	C705	B−3	C7X7	E−6	IC404	B−2	L535	B−6	Q521	D−6	R461	B−1	R4N0	E−2	R5A6	C−6	R5S8	B−3	R7XM	A−4	TPAG1	E−6		

目　录

规格 …… 1
有关安全的注意事项 …… 1
PCB的布置 …… 2
取卸构件 …… 3
引线包复 …… 7
更换光源灯 …… 9
凸镜焦距跟踪调整 …… 10
电气电路的调整 …… 11
　所需的设备和连接 …… 11
　试验信号 …… 11
　使用Microsoft®的Windows®95操作系统进行的调整 …… 12
　调整程序 …… 13
　　灯泡电源电路的调整
　　1．灯泡电源的输出的调整 …… 13
　　A/D前置放大器电路的调整
　　2．钳位电平的调整 …… 14
　　3．A/D变换器的调整 …… 15
　　液晶板驱动调整电路的调整
　　4．幻像的调整 …… 16
　　5．垂直线的调整 …… 17
　　6．闪变的调整 …… 18
LED失误显示 …… 19
OPTION BOARD INSTALLATION
PARTS LIST
　REPACKING PROCEDURE
　ELECTRICAL PARTS AND OTHERS
IC BLOCK DIAGRAM
SCHEMATIC DIAGRAM
PRINTED CIRCUIT BOARD PARTS LAYOUT

中文

商标、注册商标

Apple，Macintosh是苹果电子计算机公司的注册商标。
IBM，VGA，PS/2是国际商用机械公司的商标或注册商标。
Microsoft®，Windows®95是美国或其他国家中的微软件公司的注册商标。
而其他牌子或产品名称，分别则是各个所有者的商标或注册商标。

规　格

额定电源	：AC100～240V，50/60Hz
额定输入	：5.0A
LCD板	：1.3英寸LCD板：3片（R、G、B） 像素1,024×768=786,432个像素 总计2,359,296个像素 有效像素率：99.99%以上（每个板）
投影镜头	：F2.3～2.7 f=53.3～69.3mm
光源灯	：330W DC 金属卤素灯
图像尺寸	：纵横比 4：3 40～300英寸
音频输出	：1W+1W 立体声
扬声器	：6cm圆形（8Ω1W）×2只
S-Video输入	：亮度信号：1.0Vp-p 75Ω（负同步） 彩色信号：0.286Vp-p 75Ω （彩色同步信号）
视频输入	：1.0Vp-p 75Ω（负同步）
音频输入	：350mVrms，10kΩ以上
模拟RGB输入	：RGB：0.7Vp-p 75Ω（正同步）
（小型15针D-SUB）	YC_BC_R：Y：1.0Vp-p（负同步） C_B, C_R：0.7Vp-p HD/CS：TTL级（正） VD：TTL级（正）
PC音频输入	：350mVrms，10kΩ以上 ϕ3.5mm 立体声小型插孔
控制接口	：串口（9针D-DUB雄接头） RS-232C标准 串口（小型8针DIN雌接头） RS-232C标准
外形尺寸	：330×145×398mm 不包括支撑脚和镜头（宽×高×深）
重量	：21.5lb（9.8kg）
电源线长度	：114英寸（2.9m）
温度、湿度(正常工作范围)	：+41°F（+5°C）～+95°F（+35°C）， 30～90%

・重量以及尺寸都是近似值。
・设计以及规格，有时不经预告就进行更改。

有关安全的注意事项

注记：请一定要遵守写在壳体内部或机箱中的所有注意事项以及有关安全的说明。

警告

1．当带电的状态下进行投影显示仪的试验或维修时，在投影显示仪和交流电源之间，需要使用绝缘变压器。
2．在壳体外部，或在打开盖子的状态下，使本投影显示仪进行工作时，有可能由投影显示仪的电源部，受电冲击（触电）的危险。不熟悉高电压装置的注意事项的人，绝对不要进行投影显示仪的维修作业。
3．需要进行维修时，请调查原来的引线包复状态。特别是在高电压区域，需要特别注意来确认正确的引线包复状态。当发生短路时，请把有引起过热痕迹的元件换为新元件。

泄漏电流的低温检查

当把投影显示仪退还给顾客之前，推荐按照如下方法来测试泄漏电流：
把交流插头由交流电源拔出，在交流插头的两个销子之间放上搭接片。接通投影显示仪的交流开关。使用500伏的绝缘万用表，把一头的引线接到放上搭接片的交流插头上，把另一个引线接触到露出的金属件上（螺丝帽及其他），特别是要接触在具有回流路途的任意金属件上。
具有回流路途的金属件上的电阻读数为：最低也需具备4兆欧。在显示该值以下的电阻值时，则可认为不正常，需要采取必要措施。

PCB的布置

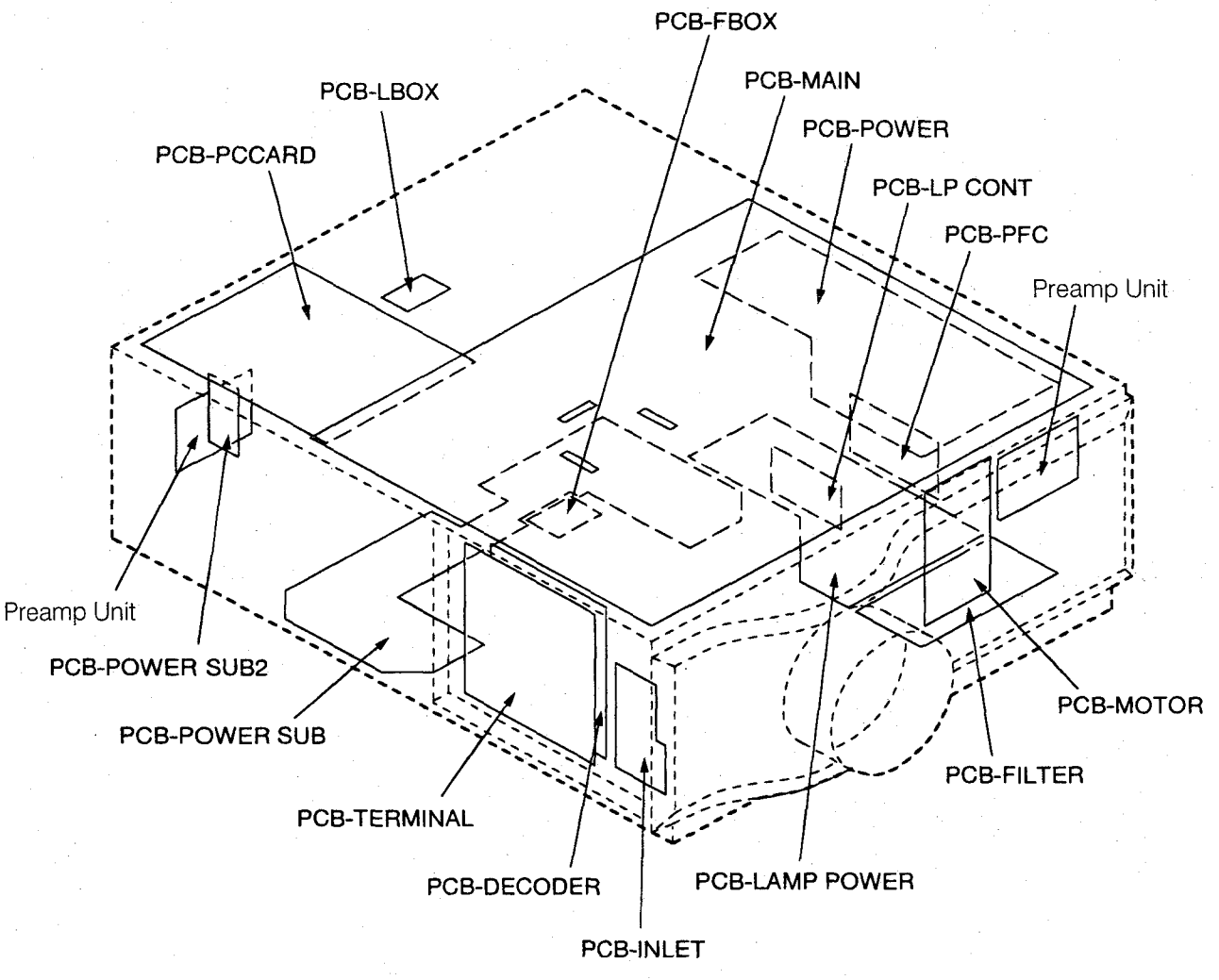
PCB-FBOX
PCB-MAIN
PCB-LBOX
PCB-POWER
PCB-PCCARD
PCB-LP CONT
PCB-PFC
Preamp Unit
Preamp Unit
PCB-POWER SUB2
PCB-MOTOR
PCB-POWER SUB
PCB-FILTER
PCB-TERMINAL
PCB-DECODER
PCB-LAMP POWER
PCB-INLET

图 1

中文

取卸构件

有关零件号码，请参阅零件目录。

注意：Top Cover Assy和Top Case，需要分别地装到产品上。如果把这两个一起装上去时，有时防爆遮板不能进行工作。在这种状态下，请不要接通电源开关。当接通开关时，有时会使灯泡引起爆炸。

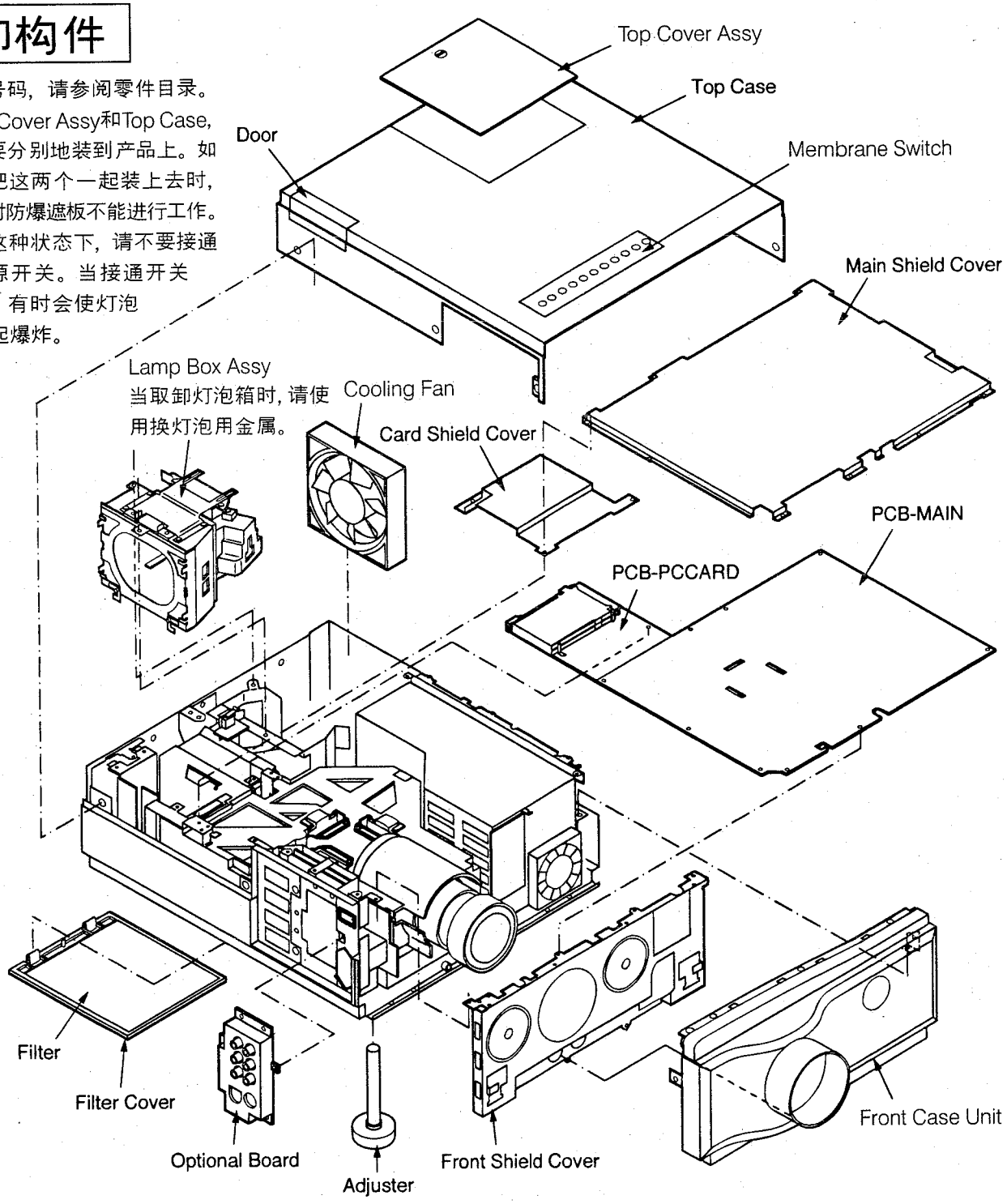

图 2 — 1

零件名称	螺丝数
Optional Board	6
Top Case	8
Top Cover Assy	1
Lamp Box Assy	2
Front Case Unit	3
Main Shield Cover	11

零件名称	螺丝数
Card Shield Cover	3
PCB-MAIN	8
PCB-PCCARD	4
Front Shield Cover	5
Filter Cover	(挂钩2个)

螺丝数：为了固定零件所需的螺丝数。

表 1 — 1

有关零件号码，请参阅零件目录。
注意：当进行维修时，作业人员需要带袖套，来使LCD不受静电的冲击。

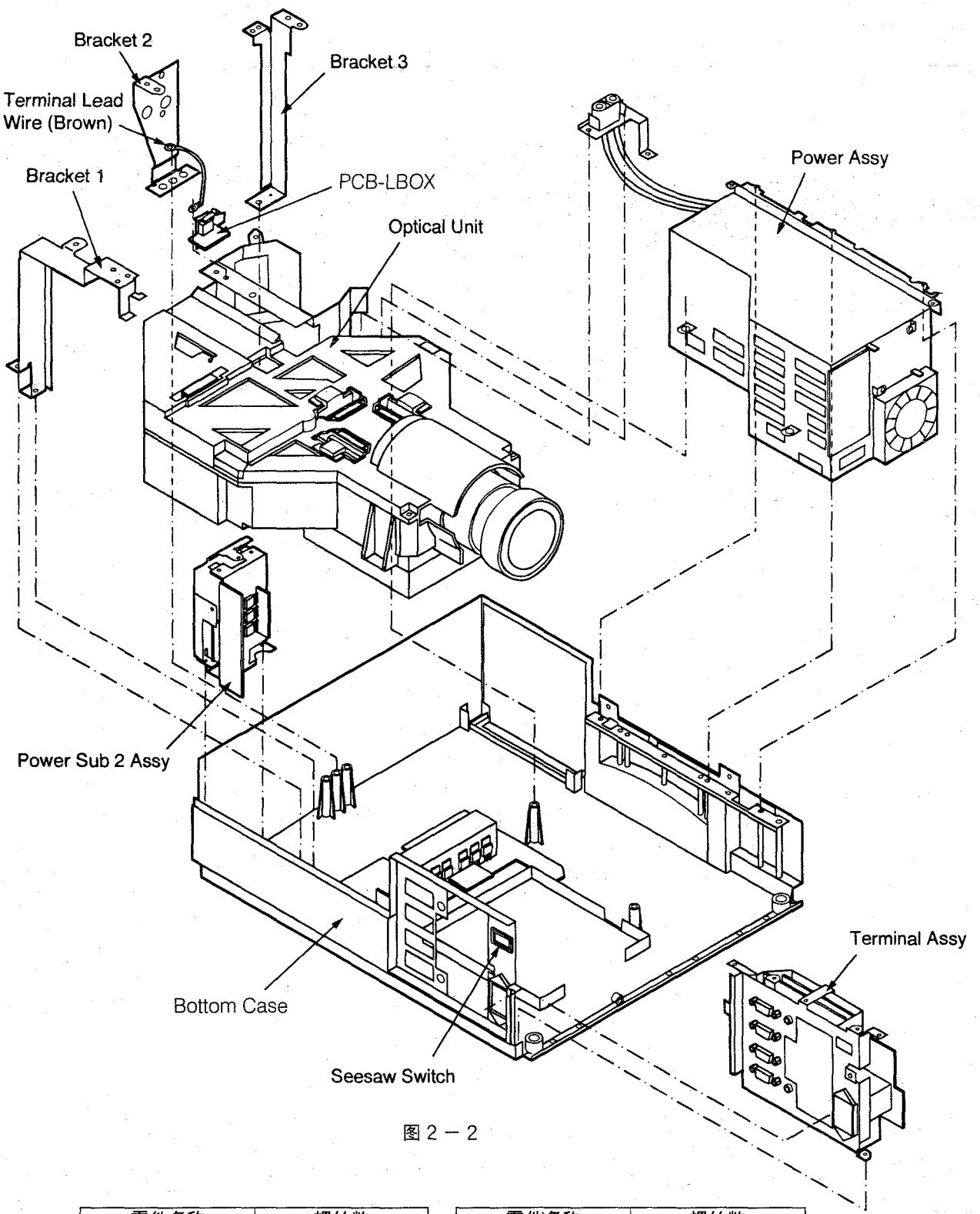

图 2 － 2

零件名称	螺丝数
Power Assy	7
Bracket 1	2
Bracket 2	1
Bracket 3	1

零件名称	螺丝数
PCB-LBOX	2
Optical Unit	3
Power Sub 2 Assy	2
Terminal Assy	6

螺丝数：为了固定零件所需的螺丝数。

表 1 － 2

有关零件号码，请参阅零件目录。
注意：当进行维修时，作业人员需要带袖套，来使LCD不受静电的冲击。

Power Sub 2 Assy零件

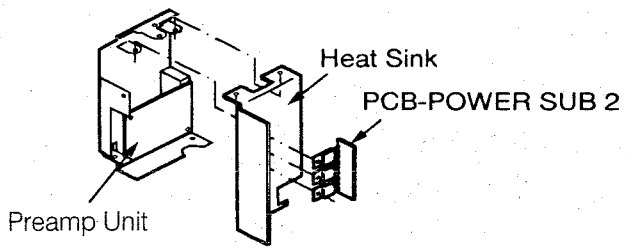

图 2 － 3

零件名称	螺丝数
PCB-POWER SUB 2	3
Heat Sink	2
Preamp Unit	2

表 1 － 3

Terminal Assy零件

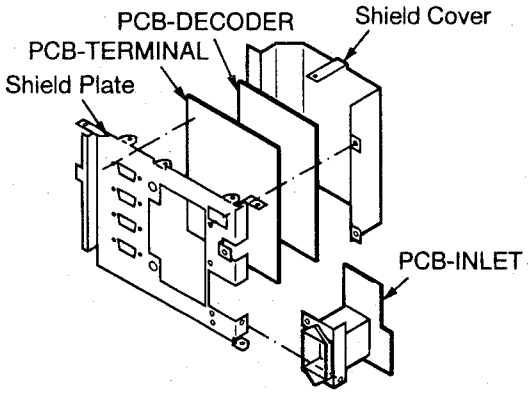

图 2 － 4

零件名称	螺丝数
Shield Cover	7
PCB-DECODER	（挂钩4个）
PCB-TERMINAL	10
PCB-INLET	3

表 1 － 4

Power Assy零件

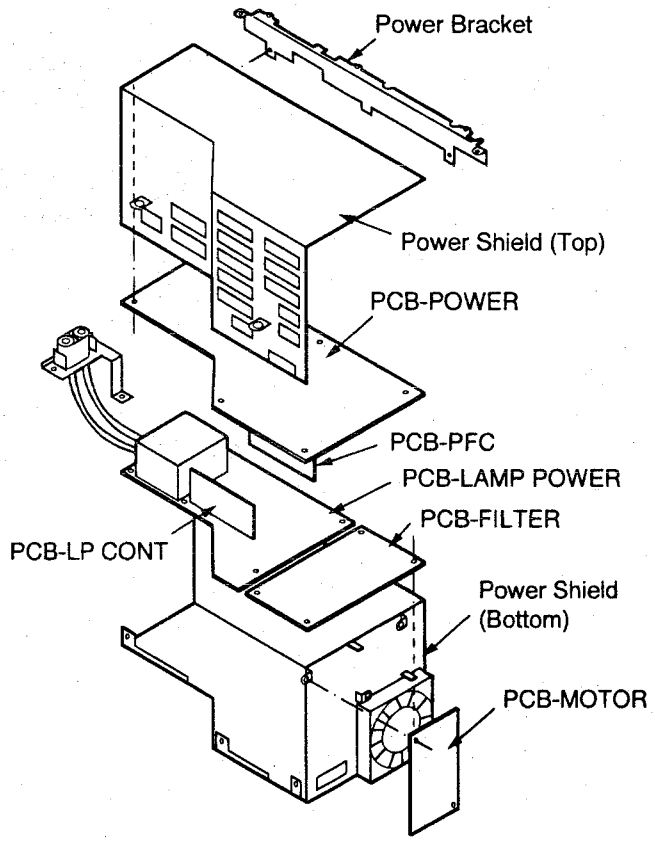

图 2 － 5

零件名称	螺丝数
Power Bracket	2
Power Shield (Top)	5
PCB-POWER	1（挂钩5个）
PCB-PFC	无
PCB-LAMP POWER	（挂钩4个）
PCB-MOTOR	2
PCB-FILTER	1（挂钩3个）
PCB-LP CONT	无

表 1 － 5

Bottom Case零件

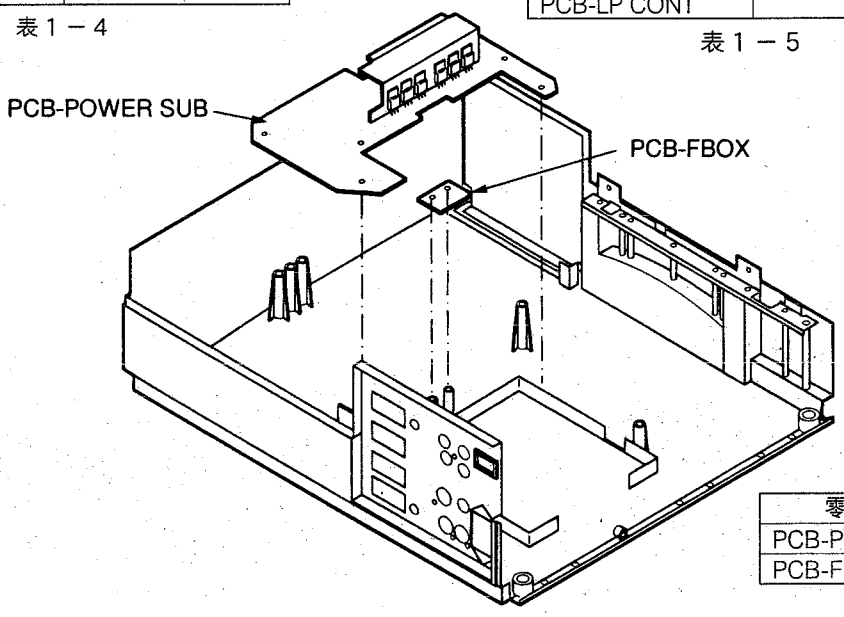

图 2 － 6

零件名称	螺丝数
PCB-POWER SUB	6
PCB-FBOX	2

表 1 － 6

Optical Unit零件

有关零件号码，请参阅零件目录。

*当更换Lens Unit或LCD Block，请进行凸镜焦距的跟踪调整。

注意：当进行维修时，作业人员需要带袖套，来使LCD不受静电的冲击。

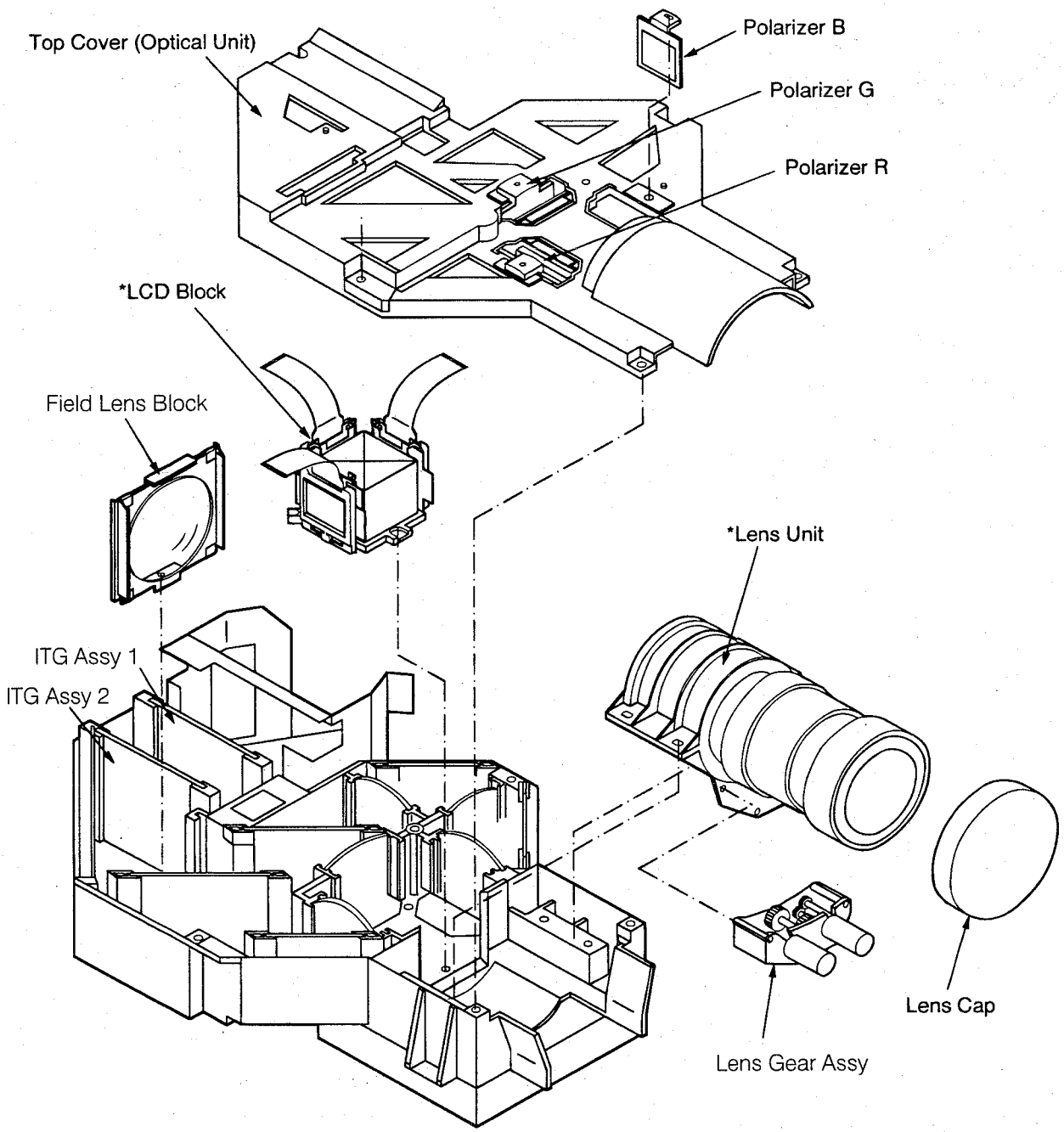

图 2 – 3

零件名称	螺丝数
Top Cover (Optical Unit)	6
Polarizer R	1
Polarizer G	1
Polarizer B	1

零件名称	螺丝数
LCD Block	3
Field Lens Block	1
Lens Unit	4
Lens Gear Assy	3

螺丝数：为了固定零件所需的螺丝数。

表 1 – 3

中文

引线包复

注意：1．内部布线是为了不与生热零件或高压零件相接触起见，进行了固定的。当结束维修之后，需要把所有布线恢复到原来位置。
2．在进行作业过程中，为了由静电保护LCD起见，作业者需要带上袖套。

1．把引线沿着下图所示的固定区*，请进行固定。
* 固定区是表示引线的通路。

═══	固定区*
┅┅┅	隐藏的固定区*

在装设Optical Unit之前的引线包复。

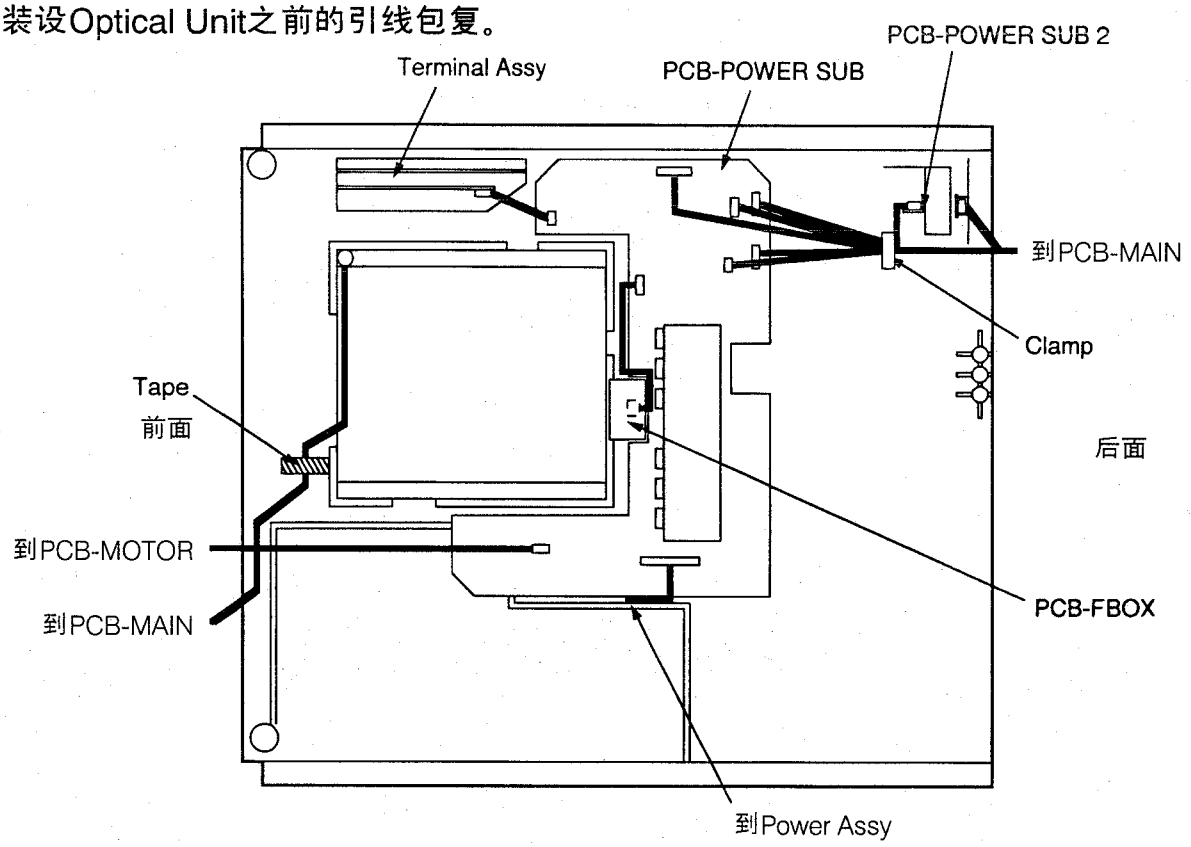

图 3 － 1

装设了Optical Unit以及Power Assy件之后的引线包复

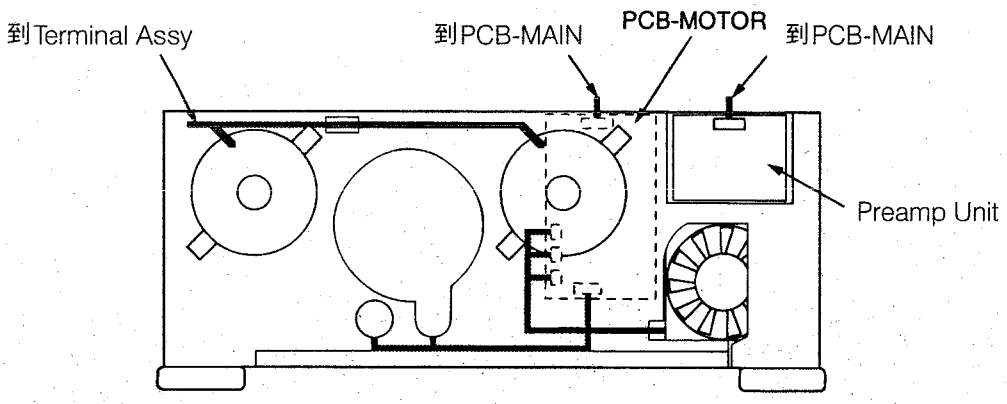

图 3 － 2

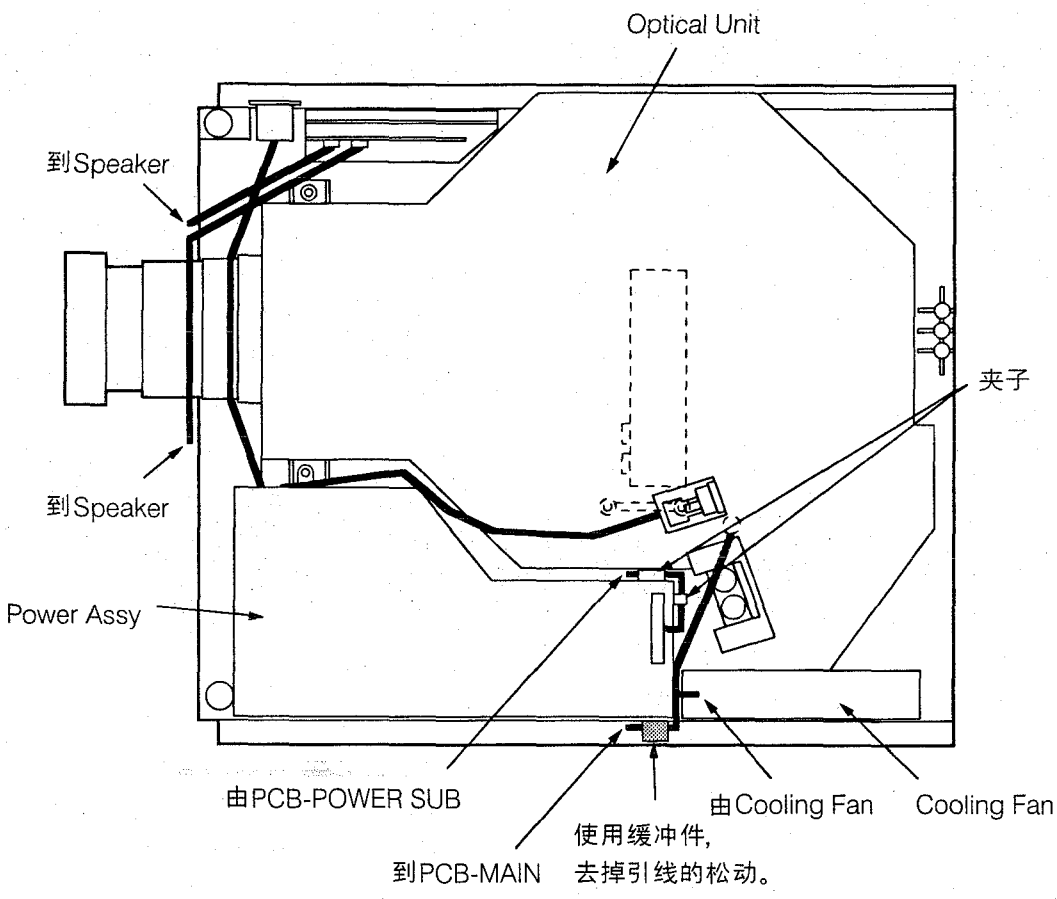

图 3 – 3

装设PCB-MAIN以及Card Shield Cover之后的引线包复

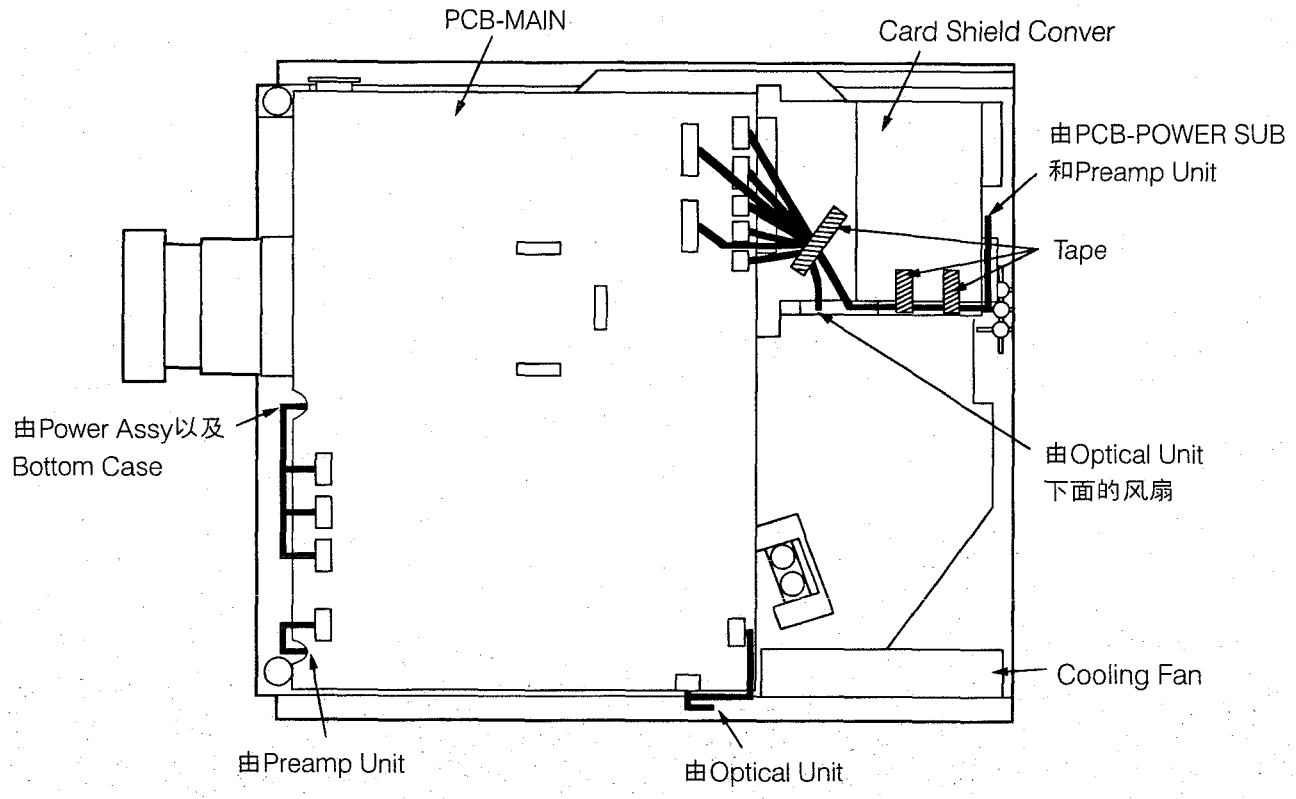

图 3 – 4

中文

更换光源灯

光源灯用于将图像投射在LCD板上。如果光源灯损坏，请换上新的光源灯以保证投影仪发挥最佳性能。

小心：

- 请勿在投影仪刚用过时从机内卸下光源灯，否则您可能被光源灯的高温烫伤。
- 更换光源灯时，请先按电源钮关闭电源，在待机模式下等待120秒让光源灯和LCD板冷却。关闭主电源开关，从电源插座上拔下电源线插头，再等待一小时让光源灯冷却到可以触摸。
- 除非需要更换，请勿卸下光源灯。请谨慎处理以免引起人身伤害或火灾事故。
- 请勿直接触摸光源灯，否则光源灯会破损并造成划伤或烫伤。
- 请勿让光源灯盖板螺丝掉入投影仪机内。同时也千万不可将金属或任何易燃物品插入机内，否则会引起火灾或触电事故。如果有异物插入，请将电源线插头拔出并与您的供应商联系。
- 光源灯应安装牢固，否则会引起火灾。
- **对维修服务人员**
  Top Cover Assy和Top Case，需要分别地装到产品上。如果把这两个一起装上去时，有时防爆遮板不能进行工作。在这种状态下，请不要接通电源开关。当接通开关时，有时会使灯泡引起爆炸。

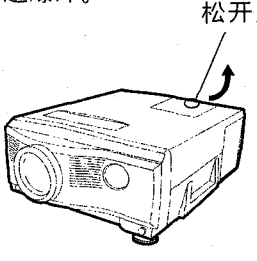

1. 用一字螺丝刀或硬币松开顶盖上的光源灯盖板螺丝，卸下盖板。
   - 将光源灯盖板朝箭头所指示的方向移动。

重要：

请小心不要损坏与该设备相连的电线。

2. 用十字螺丝刀松开固定金属片的螺丝（a）并将它们卸下。
   请勿遗失固定金属片和螺丝。

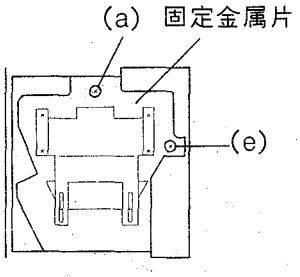

3. 将光源灯更换金属片装入机内。
   1) 将光源灯更换用固定金属片插入下述位置：光源灯前面（2处），光源灯与底端之间（4处）。
   2) 将螺丝孔（c）对准节点（d）。
   3) 用两颗螺丝（b，b'）固定金属片。

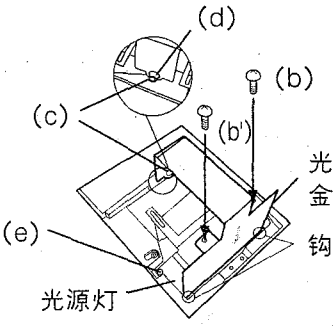

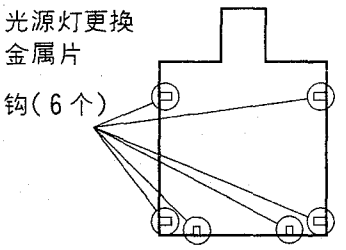

4. 用十字螺丝刀松开光源灯固定螺丝（e），将其卸下。

5. 抓住投影仪把手，拉出光源灯。
   请勿将液体泼洒在卸下的光源灯上，不可将其放在可燃物品附近或儿童能触及处。否则会引起人身伤害或火灾事故。

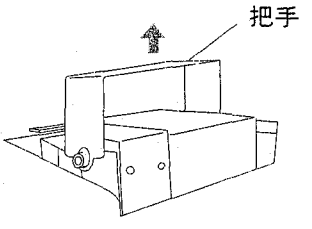

6. 按正确方向插入新的光源灯，并使其牢固。

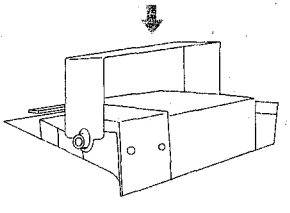

7. 用十字螺丝刀上紧在第4步中卸下的螺丝（e）。

8. 用螺丝刀松开光源灯更换金属片的两个螺丝（f）、（f'），与金属片一起卸下。

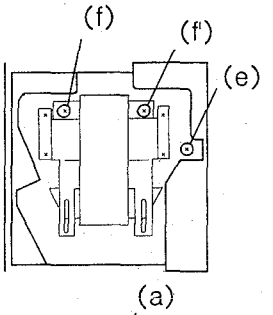

9. 从光源灯更换用固定金属片（c）和节点（d）上取下孔。

10. 将在步骤2已固定的金属片插入螺丝孔（f）和（f'）中，并用螺丝（a）将其固定。

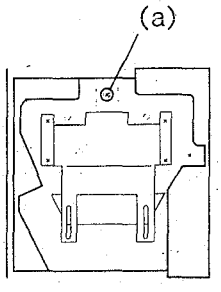

中文

11. 用一字螺丝刀或硬币上紧光源灯盖板螺丝。

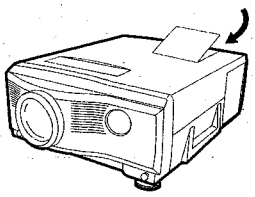

重新设定操作时间仪表的方法

插回电源线插头，接通投影仪电源，同时按 < 、> 和电源钮重设光源灯工作时间。

- 除非装上光源灯更换金属片，光源灯无法被卸下。
- 如果您没有光源灯更换金属片，请从新的光源灯上卸下金属片使用。请勿直接触摸光源灯。否则光源灯会破损并造成划伤或烫伤。

小心：

- 请勿将液体泼洒在卸下的光源灯上，不可将其放在可燃物品附近或儿童能触及处。否则会引起人身伤害或火灾事故。
- 请确认投影仪导片已牢固地插入在光源灯左右导片之间。
  请勿直接触摸光源灯，在替换光源灯上盖一块布。

重要：

- 如果光源灯盖板没有固定，投影仪电源无法接通。
- 在更换光源灯后，必须重新设定操作时间仪表。
- 若未更换光源灯，则请勿重新设定操作时间仪表。

光源灯的使用寿命

投影仪光源灯的平均使用寿命在连续使用的条件下约为1000小时。依使用环境之不同，其使用寿命的长短会有所差异，有时可能会低于1000小时。若发光量和（或）彩色亮度降低，则说明需要更换光源灯。当光源灯的工作时间超过1000小时时，指示灯会以绿色和红色交替闪烁（在光源灯工作时如此；光源灯未工作时，指示灯仅以红色闪烁）。当光源灯已使用约1250小时时，屏幕上会出现信息“LAMP!!.”当光源灯已使用约1300小时时，为光源灯的安全起见，投影仪会自动关闭，并且电源指示灯会亮起呈红色。这时，只有在更换光源灯之后，方可继续使用投影仪。

小心：

- 光源灯十分易碎。小心不要让碎片割伤您自己。
- 光源灯寿命与环境有关。更换光源灯事宜请与您的供应商联系。

当光源灯使用约1,300小时后，本投影仪会自动关机，您必须更换光源灯方可继续使用本机。

凸镜焦距跟踪调整

当更换了Lens Unit或LCD Block时，要进行此项调整工作。

当把镜头进行最大限度移近目标或移离目标时，使焦距达到最适状态，并把Lens Unit进行固定。

1. 把固定Lens Unit的4根螺丝进行松动，定到螺孔的中间附近(图中没有表示)。
2. 按动FOCUS/ZOOM按钮，在画面上显示出“ZOOM”。
3. 按动“ADJUST+”按钮，进行最大限度的移离目标(直到最小画面)。
4. 在画面上，使像素的焦距达到最适程度。
5. 在画面上显示出“ZOOM”。按动“ADJUST−”按钮，进行最大限度的移近目标（直到最大画面)。
6. 在三角孔中插入一字头螺丝刀（相当于0.24×4英寸的)，来调整跟踪。转动螺丝刀来使画面上的像素焦距达到最适位置。当转动螺丝刀时，Lens Unit会向前后进行移动。
7. 在画面上显示出“ZOOM”，并按动“ADJUST+”按钮，进行最大限度的移离目标。
8. 要注意焦距，如果焦距达到最适位置时，调整工作可以结束。如果焦距定得不合适时，要从第4项，重新开始调整。
9. 固定好4根螺丝。(紧固扭矩为：14±2kgf-m)

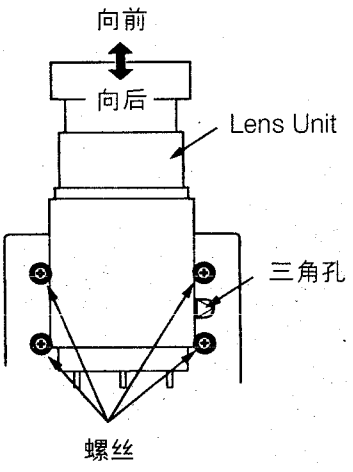

Optical Unit

中文

电气电路的调整

本产品的各个电路的调整工作，请使用Microsoft®，Windows®95操作系统的通讯程序［Hyper Terminal］来进行。

❑所需的设备和连接

把下面所例举的设备，连接为如右图所示。

- LVP-X200E
- 个人用电子计算机（装有Microsoft®的Windows®95操作系统）
- RS-232C电缆
- XGA信号发生器（相当于VG-814）
- NTSC信号发生器
- PAL信号发生器
- 个人用电子计算机的监控器

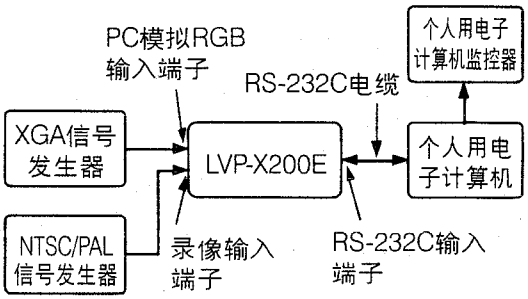

❑试验信号

1．NTSC色带信号（合成的）
2．PAL色带信号（合成的）
3．XGA信号（水平频率60周）
调整用定时和式样，如下所示。

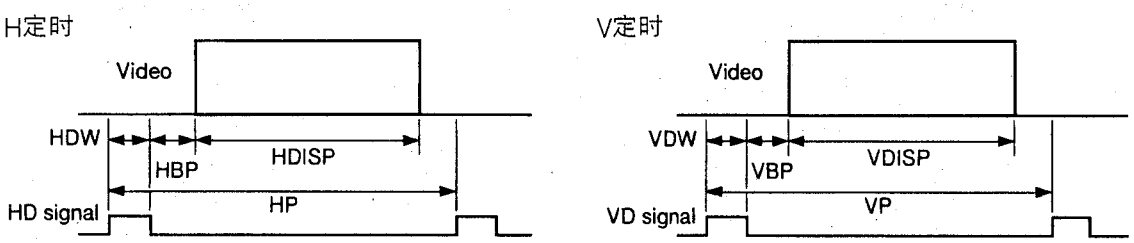

程序ROM：LC6版本1.1

程序号码	式样
01	白光栅100%
12	白光栅50%
15	隔一的水平行（红）
16	隔一的水平行（绿）
17	隔一的水平行（兰）
35	SMTPE（红）
36	SMTPE（绿）
37	SMTPE（兰）

XGA信号的定时（水平频率60周）

DOT-CLOCK［MHz］	65.0	VP［H］	806
HP［DOT］	1344	VDISP［H］	768
HDISP［DOT］	1024	VDW［H］	6
HDW［DOT］	136	VBP［H］	29
HBP［DOT］	160	隔行扫描	–
		信号极性	HD：–，VD：–

中文

❑使用Microsoft®的Windows®95操作系统进行的调整

1．开始调整

1．起动Windows®95。
2．把［Accessories］支持器，按动两次。
3．把［Hyper Terminal］支持器，按动两次。
4．把［Hyper Trm］图标，按动两次。

2．Hyper Terminal的设定

1．用Hyper Terminal窗口的文件单，指定［Properties］。这时［Connection Properties］窗口会打开。在该窗口上，进行如下设定。
2．在该窗口的通讯单中，指定［Connecting］，来接通到LVP-X200E上。

项　目		设　定
Comm. Port		Port（COM1-COM4）
Port setting	: Bit/sec	9600
	: Data bit	8 bit
	: Parity	None
	: Stop bit	1
	: Flow control	None
Setting	: Emulation	VT100
ASCII setting	: Sending ASCII	Put a line feed character at the end of the line Local echo Delay（Line）　: 1000msec. Delay（Character）　: 10msec.
	: Receiving ASCII	Put a line feed character at the end of received data

3．调整

在Hyper Terminal窗口上，使用键盘用大写文字输入调整指令和调整值，然后按动输入键。

4．写入调整值

在Hyper Terminal窗口上，使用键盘用大写文字输入写入指令和调整值，然后按动输入键。
注：当进行自动调整的调整 2（钳位电平）和调整 3（A/D变换器）时，则不必进行此项作业。

5．关闭窗口

按动窗口右上部的关闭按钮，来关闭Hyper Terminal。把开着的所有窗口进行关闭后，关掉Windows®95。

中文

调整程序

[灯泡电源电路] 1．灯泡电源的输出	调整的目的	设定对灯泡所供应电力的合适值。
	调整不良的征兆	灯泡不能以所指定的亮度亮灯，或者灯泡进行爆裂。

仪表	电流计，电压计
试验项目	灯泡的电源输出
EXT触发器	——
测定范围	——
输入信号	——
输入端子	——

*该项调整，要在对本产品接通开关之后，在1分钟之内进行。

1．由本产品卸下灯泡箱和主密封罩。
2．如图所示，在灯泡电源输出端上接通电流计，电压计，仿真负载电阻（无感应电阻，12欧，350瓦）。
3．接通本产品的开关。
4．把VR9V0（PCB LAMP POWER），调整为338±2瓦（电压64伏、电流5.28安。电压，电流值，应当为下表所示的图表范围之内）。调整VR9V0时，用PCB-MAIN上的调整用孔来进行。

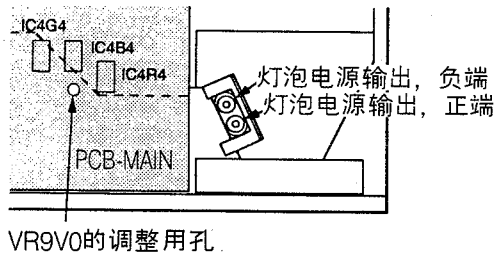

VR9V0的调整用孔

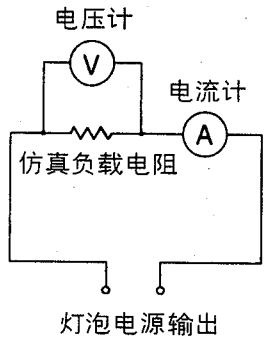

接通仪表类

调整一览表

电压：伏	电流:安(最大值)	电流:安(最小值)
63.60	5.35	5.28
63.65	5.34	5.28
63.70	5.34	5.27
63.75	5.33	5.27
63.80	5.33	2.27
63.85	5.32	5.26
63.90	5.32	5.26
63.95	5.32	5.25
64.00	5.31	5.25
64.05	5.31	5.25
64.10	5.30	5.24
64.15	5.30	5.24
64.20	5.30	5.23
64.25	5.29	5.23
64.30	5.29	5.23
64.35	5.28	5.22
64.40	5.28	5.22
64.45	5.28	5.21
64.50	5.27	5.21
64.55	5.27	5.21
64.60	5.26	5.20

灯泡电力的调整范围

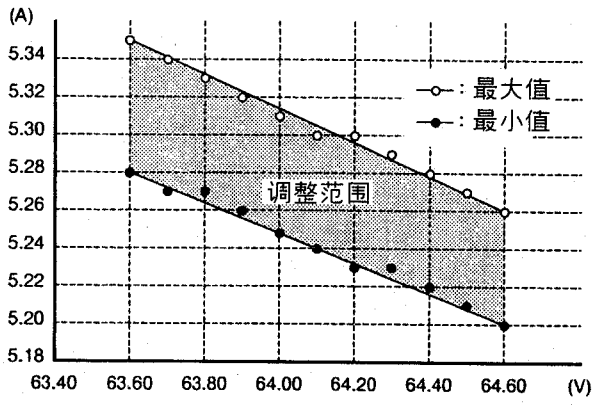

[A/D前置放大器电路] 2．钳位电平	调整的目的	需要设定输入A/D变换器图像信号的DC水平。
	调整不良的征兆	在单色图像中带有色彩。

仪表	——
试验项目	——
EXT触发器	——
测定范围	——
输入信号	XGA信号 (白100%，No. 1)
输入端子	模拟RGB输入端子

*调整指令，请使用英数字大写文字输入。

1．对个人用计算机（装有Microsoft*的Windows*95操作系统），接通LVP-X200E。(参照p.11的图)
2．在个人用计算机上，要起动Microsoft*的Windows*95。
3．用Microsoft*的Windows*95，开始通信程序［Hyper Terminal］，打开窗口。(有关设定方法，请参照p.12的Hyper Terminal的设定。)
4．使用本产品的主键符单，进行通常状态的复位。

RGB：

5．供给XGA信号（白100%，No.01)
6．在Hyper Terminal窗口中，输入［00~70］(RGB输入钳位电平调整指令)。这时，自动调整则进行起动。
7．调整后，会在Hyper Terminal窗口上，显示出复位指令［00~70111］。复位指令中的最后三位数字是表示调整结果的，各数字是以R，G，B，的顺序，相对应的。数字1则表示调整是成功的，而数字0，则由于PCB上的故障，错误信号或者输入选择的失误，表示调整工作失败。

录像：

8．对图像输入端子，供给NTSC信号（色带)。
9．在Hyper Terminal窗口上，输入［00~71］(VIDEO输入钳位电平调整指令)。自动调整进行起动。
10．调整后，在Hyper Terminal窗口上，会显示出复位指令［00~7111］。复位指令的最后两位数字，表示调整结果，各数字相当于R-Y，B-Y。数字1则表示调整是成功的，而数字0，则由于PCB上的故障，错误信号或者输入选择的失误，表示调整工作失败。

中文

[A/D前置放大器电路] 3．A/D变换器	调整的目的	需要设定对A/D变换器进行输入的图像信号的振幅。
	调整不良的征兆	在单色图像中，带有色彩。

仪表	——
试验项目	——
EXT触发器	——
测定范围	——
输入信号	XGA信号 (白100%，No.1)
输入端子	模拟RGB输入端子

*调整指令，请使用英数字大写文字输入。

1．对个人用计算机（装有Microsoft®的Windows®95操作系统），接通LVP-X200E。（参照p.11的图）
2．在个人用计算机上，要起动Microsoft®的Windows®95。
3．用Microsoft®的Windows®95，开始通信程序［Hyper Terminal］，打开窗口。（有关设定方法，请参照p.12的Hyper Terminal的设定。）
4．使用本产品的主键符单，进行通常状态的复位。
5．供给XGA信号（白100%，No.1）。
6．在Hyper Terminal窗口上，输入［00~5］（A/D调整指令）。开始进行自动调整。
7．调整后，会在Hyper Terminal窗口上，显示出复位指令［00~5111］。复位指令中的最后三位数字是表示调整结果的，各数字是以R, G, B, 的顺序，相对应的。数字1则表示调整是成功的，而数字0，则由于PCB上的故障，错误信号或者输入选择的失误，表示调整工作失败。

中文

[液晶板驱动调整电路] 4．幻像	调整的目的	由屏幕排除幻像。
	调整不良的征兆	12每个像素都出现幻像。

仪表	——
试验项目	——
EXT触发器	——
测定范围	——
输入信号	XGA信号 (SMTPE（R），No. 35)
输入端子	模拟RGB输入端子

*该调整工作，只在屏幕上明显地出现幻像时进行。
*调整指令，请使用英数字大写文字输入。

1．对个人用计算机（装有Microsoft®的Windows®95操作系统），接通LVP-X200E。(参照p.11的图)
2．在个人用计算机上，要起动Microsoft®的Windows®95。
3．用Microsoft®的Windows®95，开始通信程序［Hyper Terminal］，打开窗口。(有关设定方法，请参照p.12的Hyper Terminal的设定。)
4．使用本产品的主键符单，进行通常状态的复位。
5．在屏幕上照射图像。

红：

6．供给XGA信号（SMTPE（R），No.35)。
7．操作信号源，在屏幕上的红单色内进行投影。
8．在Hyper Terminal窗口上，输入调整指令［00~3123□□］，使红色幻像达到最小程度。要想使幻像达到最小程度，要在□□中，输入［99］，［AA］，［BB］，［CC］或［DD］。在□□中，在调整之前已经写有［BB］。
(*1) 当送信被正确地进行时，会显示出送信结束指令。就是不在□□中输入字母，只要送出该指令，就能够确定电流值。
9．Hyper Terminal窗口上，输入写入指令［00~1E93□□］，在EEPROM上，填写变更值。把步骤8的值输入到□□中。(*1)

绿：

10. 供给XGA信号（SMTPE（G），No.36)。
11. 操作信号源，在屏幕上的绿单色内进行投影。
12. 在Hyper Terminal窗口上，输入调整指令［00~3223□□］，使绿色幻像达到最小程度。要想使幻像达到最小程度，要在□□中，输入［99］，［AA］，［BB］，［CC］或［DD］。在□□中，在调整之前已经写有［BB］。(*1)
13. Hyper Terminal窗口上，输入写入指令［00~1EAA□□］，在EEPROM上，填写变更值。把步骤12的值输入到□□中。(*1)

兰：

14. 供给XGA信号（SMTPE（B），No.37)。
15. 操作信号源，在屏幕上的兰单色内进行投影。
16. 在Hyper Terminal窗口上，输入调整指令［00~3323□□］，使兰色幻像达到最小程度。要想使幻像达到最小程度，要在□□中，输入［99］，［AA］，［BB］，［CC］或［DD］。在□□中，在调整之前已经写有［BB］。(*1)
17. Hyper Terminal窗口上，输入写入指令［00~1EC1□□］，在EEPROM上，填写变更值。把步骤16的值输入到□□中。(*1)

中文

[液晶板驱动调整电路] 5．垂直线	调整的目的	要从屏幕排除垂直线。
	调整不良的征兆	12每像素都出现垂直线。

仪表	——
试验项目	——
EXT触发器	——
测定范围	——
输入信号	XGA信号 (白50%，No.12)
输入端子	模拟RGB输入端子

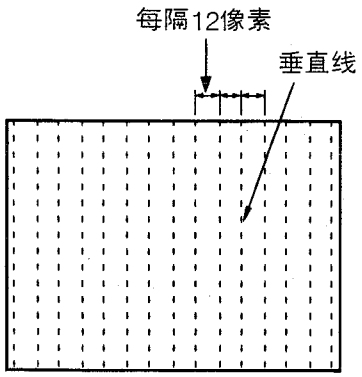

*该调整只限于在屏幕上明显出现垂直线时进行。
*调整指令，请使用英数字大写文字输入。

1．对个人用计算机（装有Microsoft®的Windows®95操作系统），接通LVP-X200E。(参照p.11的图)
2．在个人用计算机上，要起动Microsoft®的Windows®95。
3．用Microsoft®的Windows®95，开始通信程序［Hyper Terminal］，打开窗口。(有关设定方法，请参照p.12的Hyper Terminal的设定。)
4．使用本产品的主键符单，进行通常状态的复位。
5．供给XGA信号（白50%，No.12)。
6．在屏幕上投射图像。
7．在Hyper Terminal窗口上，输入调整指令［00~227□□］，使垂直线达到最小程度。要想使垂直线达到最小程度，要在□□中，输入由［10h］到［FFh］的任意数值。在□□中，在调整之前已经写有［10］。
(*1) 当送信被正确地进行时，会显示出送信结束指令。就是不在□□中输入数值，只要送出该指令，就能够确定电流值。

8．Hyper Terminal窗口上，输入写入指令［00~1F2B□□］，在EEPROM上，填写变更值。把步骤7的值输入到□□中。(*1)

[液晶板驱动调整电路] 6．闪变	调整的目的	应当由屏幕排除闪变。
	调整不良的征兆	有闪变。

仪表	——
试验项目	——
EXT触发器	——
测定范围	——
输入信号	XGA信号 (隔红色像素No.15的水平线)
输入端子	模拟RGB输入端子

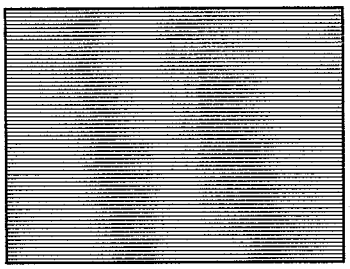

隔像素式样的水平线

*该项调整，只在屏幕上明显地出现闪变时进行。

1．对个人用计算机（装有Microsoft®的Windows®95操作系统），接通LVP-X200E。(参照p.11的图)
2．在个人用计算机上，要起动Microsoft®的Windows®95。
3．用Microsoft®的Windows®95，开始通信程序［Hyper Terminal］，打开窗口。(有关设定方法，请参照p.12的Hyper Terminal的设定。)
4．使用本产品的主键符单，进行通常状态的复位。

红：

5．供给XGA信号（隔红色像素No. 15的水平线）
6．在屏幕上投射图像。
7．在Hyper Terminal窗口上，输入调整指令［00~229□□］，使红色闪变达到最小程度。要想使闪变达到最小程度，要在□□中，输入由［00h］到［FFh］的任意数值。在□□中，在调整之前已经写有［A0h］。
(*1) 当送信被正确地进行时，会显示出送信结束指令。就是不在□□中输入数值，只要送出该指令，就能够确定电流值。
8．Hyper Terminal窗口上，输入写入指令［00~1F2D□□］，在EEPROM上，填写变更值。把步骤7的值输入到□□中。(*1)

绿：

9．供给XGA信号（隔绿色像素No.16的水平线）
10．在Hyper Terminal窗口上，输入调整指令［00~22A□□］，使绿色闪变达到最小程度。要想使闪变达到最小程度，要在□□中，输入由［00h］到［FFh］的任意数值。在□□中，在调整之前已经写有［A0h］。(*1)
11．Hyper Terminal窗口上，输入写入指令［00~1F2E□□］，在EEPROM上，填写变更值。把步骤10的值输入到□□中。(*1)

兰：

12．供给XGA信号（隔兰色像素No.17的水平线）
13．在Hyper Terminal窗口上，输入调整指令［00~22B□□］，使兰色闪变达到最小程度。要想使闪变达到最小程度，要在□□中，输入由［00h］到［FFh］的任意数值。在□□中，在调整之前已经写有［A0h］。(*1)
14．Hyper Terminal窗口上，输入写入指令［00~1F2F□□］，在EEPROM上，填写变更值。把步骤13的值输入到□□中。(*1)

中文

LED失误显示

本产品带有自我诊断功能。如果发生某种异常现象，在产品顶部的LED，会显示出失误。

诊断方法 ：当每输入主电力，会使SW进行起动，在4秒钟以内检查传感器，来寻找失误。在检查过程中，POWER LED会亮红灯。

显示诊断结果 ：LED的显示和故障，会以如下表来表示出。当结束故障的检查时，LED会自动地或“以主电力接通/断开转换”来进行复位。

强制电力接通 ：由于STBY电力短路或SW电力短路，当不能对本产品接通电源时，要同时按动产品顶部上的3个按钮，即RGB，VIDEO，CARD，按动时间为传感器检查所需的4秒钟，使故障检查进行起动。这时，STBY电力短路和SW电力短路以外的保护电路会进行动作。

LED失误显示一览表

优先顺序	故障	征兆	目的	LED显示					复位
				POWER	LAMP	TEMP	CARD1	CARD2	
1	STBY电力短路	电不通	故障的检测	红/绿交替	橙色	红色闪光2	*	*	主电力
2	SW电力短路	电不通	故障的检测	红/绿交替	橙色	红色闪光	*	*	主电力
3	风扇停止（光学总成）	电不通	故障的检测	红/绿交替	红色	红色闪光3	*	*	主电力
4	风扇停止（疲劳）	电不通	故障的检测	红/绿交替	红色	红色闪光2	*	*	主电力
5	风扇停止（通风孔）	电不通	故障的检测	红/绿交替	红色	红色闪光	*	*	主电力
6	风扇停止（电力）	电不通	故障的检测	红/绿交替	红色	红色闪光4	*	*	主电力
7	LBOX打开	电不通	防止危险	红/绿交替	—	—	*	*	自动
8	FBOX打开	电不通	防止吸入灰尘	红/绿交替	—	—	*	*	自动
9	热敏电阻的插塞脱落（疲劳）	电不通	故障的检测	红/绿交替	—	红色闪光	*	*	自动
10	热敏电阻的插塞脱落（灯泡）	电不通	故障的检测	红/绿交替	—	红色闪光2	*	*	自动
11	电子计算机之间的通讯失败	电不通	故障的检测	红/绿交替	橙色	红色	*	*	自动
12	IIC母线故障（EEPROM）	电不通	故障的检测	红/绿交替	绿色	红色闪光2	*	*	自动
13	IIC母线故障（译码器）	VIDEO输入的下方显示	故障的检测	红/绿交替	绿色	红色闪光	*	*	自动

—：LED断开状态　　橙色：红色和绿色同时亮灯

*：不需确认　　红色闪光N：红色闪灭N次之后，停顿一定时间，然后反复进行循环动作。

LED失误显示一览表

优先顺序	故障	征兆	目的	LED显示					复位
				POWER	LAMP	TEMP	CARD1	CARD2	
14	温度传感器（灯泡）	电不通	温度上升	红色	—	红色 闪光2	*	*	自动
15	温度传感器 （通风孔）	电不通	温度上升	红色	—	红色 闪光	*	*	自动
16	温度传感器（PCB）	电不通	温度上升	红色	—	红色 闪光3	*	*	自动
17	灯泡寿命 （1000～1300小时）	只是以LED进行警告显示	等待中的LED显示来进行警告显示	红色	红色 闪光	—	*	*	手动
			等待中的LED显示来进行警告显示	绿色	红/ 绿交替	—	*	*	手动
	灯泡寿命 （1300小时以上）	电不通	灯泡寿命	红色	红色	—	*	*	手动
18	不亮灯	电力在1分钟内 不能接通	灯泡保护	红色	绿色 闪光	—	*	*	自动
19	1分钟之后 电力接通	电力在1分钟内 不能断开	灯泡保护	绿色	绿色 闪光	—	*	*	自动
20	1分钟之后 电力断开	电力在1分钟内 不能接通	灯泡保护	红色	绿色 闪光	—	*	*	自动
21	IIC母线故障 （HIC）	全输入的下部显示	故障的检测	*	*	*	绿色 闪光	绿色 闪光	自动
22	IIC母线故障 （EEPROM）	电不通	故障的检测	*	*	*	绿色 闪光2	绿色 闪光2	自动

—：LED断开状态　　橙色：红色和绿色同时亮灯

＊：不需确认　　红色闪光N：红色闪灭N次之后，停顿一定时间，然后反复进行循环动作。

中文

OPTION BOARD INSTALLATION

1 Remove 6 screws and detouch the plate from the Projector.

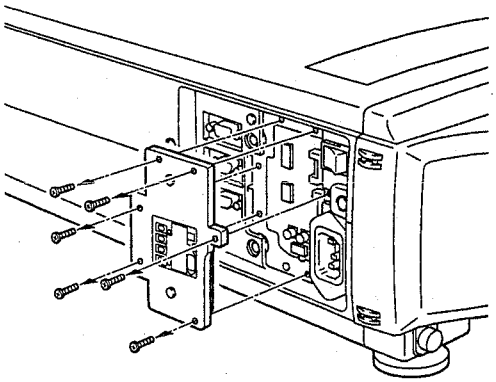

2 Connect 2 places of the connector on the terminal board.
* Connector A(small) upper.
  Connector B(large) below.

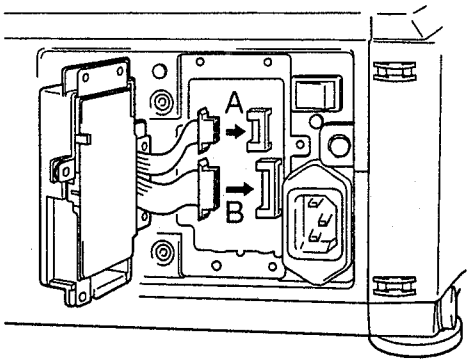

3 Fix the terminal board with 6 screws.

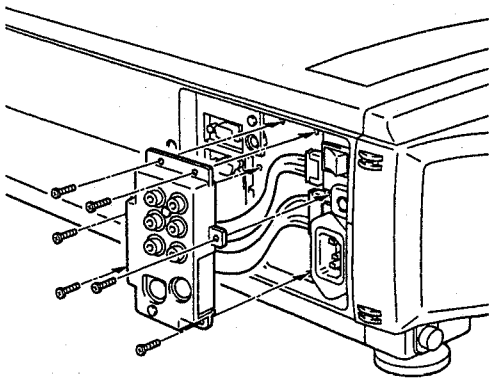

4 Put on the adhesive label attached.

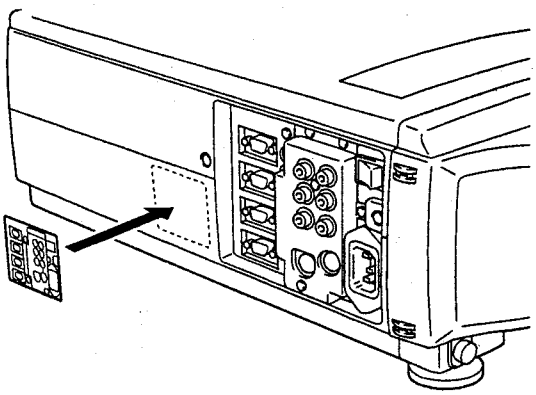

COMMON USE

PARTS LIST

REPACKING PROCEDURE

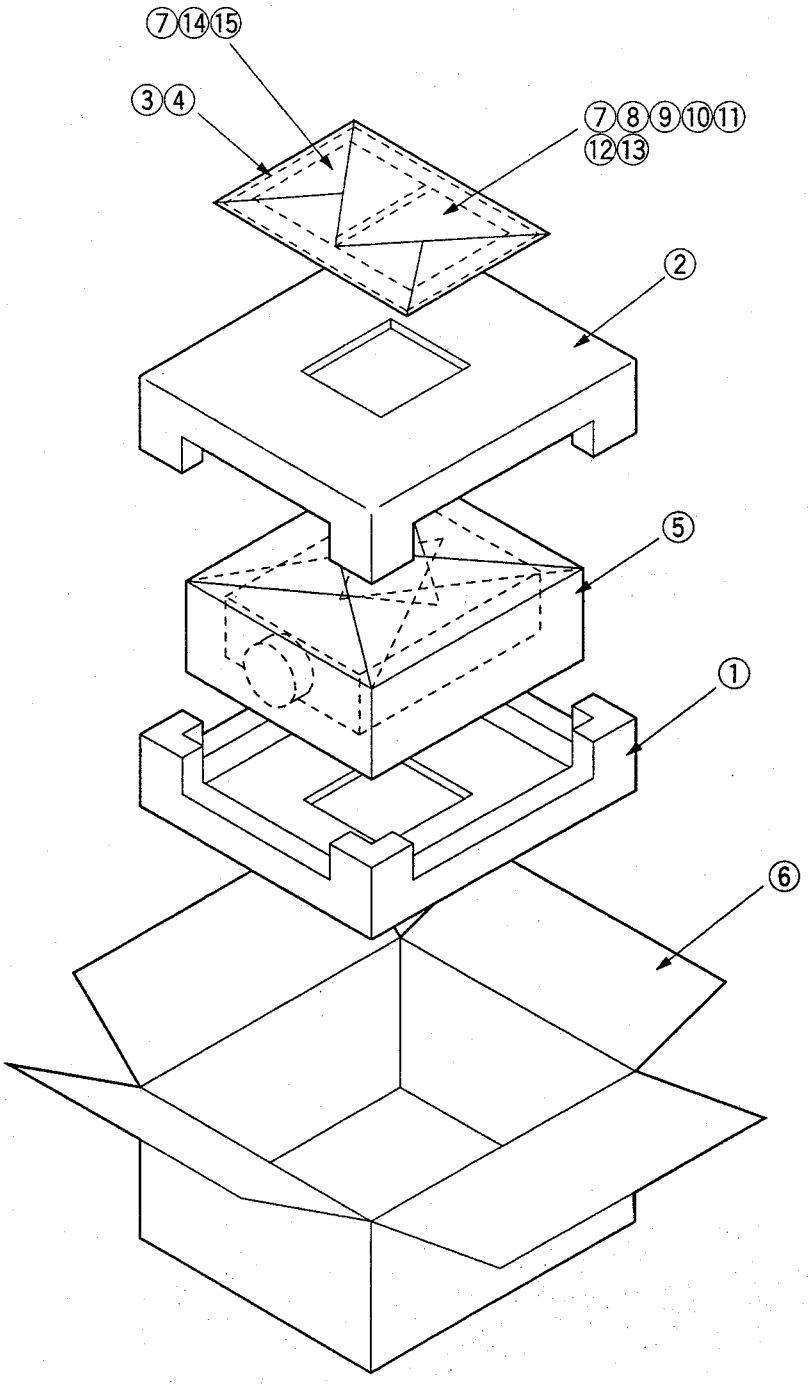

COMMON USE

ELECTRICAL PARTS AND OTHERS

MODEL : LVP-X200E

In order to expedite delivery of replacement part orders.

Specify : 1. Model number/Serial number

2. Part number and Description

3. Quantity

Unless full information is supplied, delay in execution of orders will result.

⚠ : Critical components

MARK	B	C	D	F	G	J	K
TOLERANCE (%)	±0.1	±0.25	±0.5	±1	±2	±5	±10

MARK	M	N	V	X	Z	P	Q
TOLERANCE (%)	±20	±30	±10	+40 -20	+80 -20	+100 0	+30 -10

MARK	B	C	D	F	G
TOLERANCE (pF)	±0.1	±0.25	±0.5	+1	+2

SYMBOL No.	PARTS No.	PARTS NAME	DESCRIPTION
	INTEGRATED CIRCUITS		
IC200	270P703O10	IC	BA7657F
IC201	270P703O10	IC	BA7657F
IC210	270P566O10	IC	AD8180AR
IC211	270P567O10	IC	AD8182AR
IC220	270P582O10	IC	AD8073JR
IC250	272P938O10	IC	M52055FP
IC260	275P140O10	MOS IC	74VHC153M
IC2A0	272P938O10	IC	M52055FP
IC2A2	270P313O10	IC	TDA9141
IC2A3	270P314O20	IC	TDA4665T
IC2A4	270P575O10	IC	NJM78M08DLA
IC2A5	272P124O20	IC	NJM2209M
IC300	275P142O10	MOS IC	74VHC4052M
IC350	272P525O10	IC	µPC1406HA(MS)
IC354	270P710O10	IC	TDA2822
IC400	270P614O10	IC	PST9128NR
IC401	275P109O10	MOS IC	µPD82061GN-001-LMU
IC402	275P103O10	MOS IC	GM833X3FCC2-68
IC403	275P108O20	MOS IC	µPD82085GL-002-NMU
IC404	275P124O10	MOS IC	HD74LVC245AT
IC405	275P302O10	MOS IC	SLAA11AFOS
IC407	275P303O10	MOS IC	SLAA11AF0T
IC4B3	279P055O40	MOS IC	MB811171622A-100FN
IC4B4	279P055O40	MOS IC	MB811171622A-100FN
IC4B5	279P055O10	MOS IC	µPD4516161G5-A12-7
IC4C1	279P055O10	MOS IC	µPD4516161G5-A12-7
IC4G3	279P055O40	MOS IC	MB811171622A-100FN
IC4G4	279P055O40	MOS IC	MB811171622A-100FN
IC4G5	279P055O10	MOS IC	µPD4516161G5-A12-7
IC4P1	275P124O10	MOS IC	HD74LVC245AT
IC4R3	279P055O40	MOS IC	MB811171622A-100FN
IC4R4	279P055O40	MOS IC	MB811171622A-100FN
IC4R5	279P055O10	MOS IC	µPD4516161G5-A12-7
IC502	270P698O10	IC	CXA3106AQ
IC503	270P707O10	IC	PQ05DZ1U
IC504	274P759O10	MOS IC	TC7W14F
IC520	272P793O10	IC	M52036SP
IC522	275P121O10	MOS IC	HD74LVC14T
IC5R2	270P241O10	IC	TL431CPS
IC5R3	270P199O10	IC	M62358FP
IC600	270P238O10	IC	LM1201M
IC601	270P238O10	IC	LM1201M
IC602	270P238O10	IC	LM1201M
IC603	263P701O30	MOS IC	HD74HC4053FP
IC604	270P241O10	IC	TL431CPS
IC605	272P106O40	IC	µPC4574G2
IC606	272P106O40	IC	µPC4574G2
IC607	270P568O10	IC	CXA3026AQ
IC608	270P568O10	IC	CXA3026AQ
IC609	270P568O10	IC	CXA3026AQ
IC6E0	270P199O10	IC	M62358FP
IC700	275P292O10	MOS IC	M38022M4-445FP
IC701	270P577O10	IC	PST600DMT
IC702	275P204O10	MOS IC	24LC65T-I
IC703	274P503O20	MOS IC	74ACT245MTC

SYMBOL No.	PARTS No.	PARTS NAME	DESCRIPTION
IC706	270P571O10	IC	LM75CIMX-5
IC707	263P701O30	MOS IC	HD74HC4053FP
IC708	275P124O10	MOS IC	HD74LVC245AT
IC709	275P123O10	MOS IC	HD74LVC138T
IC711	275P124O10	MOS IC	HD74LVC245AT
IC712	275P107O10	MOS IC	TL16C550CFN
IC713	270P615O10	IC	µPD71055GB-10-3B4
IC714	270P615O10	IC	µPD71055GB-10-3B4
IC7A0	275P291O10	MOS IC	M32000D4AFP
IC7A1	275P104O10	MOS IC	M65439FP
IC7A2	270P614O10	IC	PST9128NR
IC7A3	275P121O10	MOS IC	HD74LVC14T
IC7A4	274P503O20	MOS IC	74ACT245MTC
IC7A5	274P503O20	MOS IC	74ACT245MTC
IC7A6	274P503O20	MOS IC	74ACT245MTC
IC7A7	275P134O10	MOS IC	M5M4V17800CTP-6
IC7A8	275P134O10	MOS IC	M5M4V17800CTP-6
IC7A9	275P124O10	MOS IC	HD74LVC245AT
IC7B0	275P124O10	MOS IC	HD74LVC245AT
IC7B1	275P124O10	MOS IC	HD74LVC245AT
IC7B2	275P124O10	MOS IC	HD74LVC245AT
IC7B3	275P124O10	MOS IC	HD74LVC245AT
IC7B4	275P120O10	MOS IC	HD74LVC08T
IC7B5	275P124O10	MOS IC	HD74LVC245AT
IC7B6	275P124O10	MOS IC	HD74LVC245AT
IC7B7	275P304O10	MOS IC	TE28F160S5-70
IC7C1	270P615O10	IC	µPD71055GB-10-3B4
IC7C2	270P615O10	IC	µPD71055GB-10-3B4
IC7C3	275P120O10	MOS IC	HD74LVC08T
IC7C5	275P124O10	MOS IC	HD74LVC245AT
IC7C6	275P124O10	MOS IC	HD74LVC245AT
IC7C7	275P124O10	MOS IC	HD74LVC245AT
IC7C8	275P124O10	MOS IC	HD74LVC245AT
IC7C9	275P124O10	MOS IC	HD74LVC245AT
IC7D0	275P124O10	MOS IC	HD74LVC245AT
IC7D1	275P124O10	MOS IC	HD74LVC245AT
IC7D2	275P124O10	MOS IC	HD74LVC245AT
IC7D3	275P124O10	MOS IC	HD74LVC245AT
IC7D4	275P124O10	MOS IC	HD74LVC245AT
IC7D5	275P124O10	MOS IC	HD74LVC245AT
IC7D6	275P124O10	MOS IC	HD74LVC245AT
IC7D7	275P124O10	MOS IC	HD74LVC245AT
IC7D8	275P124O10	MOS IC	HD74LVC245AT
IC7D9	275P124O10	MOS IC	HD74LVC245AT
IC7E0	275P124O10	MOS IC	HD74LVC245AT
IC7E1	275P124O10	MOS IC	HD74LVC245AT
IC7E2	275P124O10	MOS IC	HD74LVC245AT
IC7E3	275P124O10	MOS IC	HD74LVC245AT
IC7E4	270P574O10	IC	TPS2205IDB
IC7E5	275P120O10	MOS IC	HD74LVC08T
IC7E6	275P122O10	MOS IC	HD74LVC32T
IC7E7	275P204O10	MOS IC	24LC65T-I
IC7E8	274P503O20	MOS IC	74ACT245MTC
IC7E9	275P124O10	MOS IC	HD74LVC245AT
IC7F0	275P134O10	MOS IC	M5M4V17800CTP-6
IC7F1	275P134O10	MOS IC	M5M4V17800CTP-6

COMMON USE

SYMBOL No.	PARTS No.	PARTS NAME	DESCRIPTION
IC7F2	274P076O10	MOS IC	SC7S32F
IC7F3	275P120O10	MOS IC	HD74LVC08T
IC7F4	275P124O10	MOS IC	HD74LVC245AT
IC7Z0	270P579O10	IC	ADM208EARS
IC800	267P138O20	IC	H8L7308D
IC801	270P715O10	IC	AD8026AR
IC802	270P715O10	IC	AD8026AR
IC803	270P715O10	IC	AD8026AR
IC806	270P576O10	IC	OP467GS
IC807	263P436O10	MOS IC	MC74HC4066F
IC809	263P436O10	MOS IC	MC74HC4066F
IC810	263P291O10	MOS IC	MC74HC04AF
IC8A0	267P138O20	IC	H8L7308D
IC8A1	270P715O10	IC	AD8026AR
IC8A2	270P715O10	IC	AD8026AR
IC8A3	270P715O10	IC	AD8026AR
IC8A6	270P576O10	IC	OP467GS
IC8A7	263P436O10	MOS IC	MC74HC4066F
IC8A9	263P436O10	MOS IC	MC74HC4066F
IC8B0	263P291O10	MOS IC	MC74HC04AF
IC8M0	267P138O20	IC	H8L7308D
IC8M1	270P715O10	IC	AD8026AR
IC8M2	270P715O10	IC	AD8026AR
IC8M3	270P715O10	IC	AD8026AR
IC8M6	270P576O10	IC	OP467GS
IC8M7	263P436O10	MOS IC	MC74HC4066F
IC8M9	263P436O10	MOS IC	MC74HC4066F
IC900	272P815O20	IC	µPC7818AHF
IC950	267P137O10	IC	STR-M6833A
IC951	267P062O70	IC	SE005N
IC9A0	270P581O10	IC	SI-3150FA
IC9A1	270P599O10	IC	LM2991T
IC9A2	272P293O10	IC	NJM79L05A
IC9A3	267P131O10	IC	SI-3033C
IC9A4	272P240O10	IC	M5237L
IC9A5	270P212O10	IC	AN7812F
IC9A6	270P540O20	IC	SI-3050F
IC9A7	267P076O30	IC	SI-3050C
IC9A8	267P076O10	IC	SI-3120C
IC9B0	270P580O20	IC	SI-3120FA
IC9B1	267P076O30	IC	SI-3050C
IC9M0	270P569O20	IC	FA5331M
IC9S0	272P990O10	IC	LB1641
IC9S1	272P990O10	IC	LB1641
IC9V1	270P580O10	IC	SI-3120F
IC9X0	270P716O10	IC	MB3769APF
	TRANSISTORS		
Q 201	261P005O10	CHIP TRANSISTOR	2SC3123
Q 202	261P005O10	CHIP TRANSISTOR	2SC3123
Q 203	261P005O10	CHIP TRANSISTOR	2SC3123
Q 204	260P899O10	CHIP TRANSISTOR	2SC3734-B23
Q 205	260P899O10	CHIP TRANSISTOR	2SC3734-B23
Q 206	260P899O10	CHIP TRANSISTOR	2SC3734-B23
Q 207	260P899O10	CHIP TRANSISTOR	2SC3734-B23
Q 210	261P005O10	CHIP TRANSISTOR	2SC3123
Q 211	261P005O10	CHIP TRANSISTOR	2SC3123

SYMBOL No.	PARTS No.	PARTS NAME	DESCRIPTION
Q 212	261P005O10	CHIP TRANSISTOR	2SC3123
Q 213	260P806O10	CHIP TRANSISTOR	DTA124EK
Q 214	260P807O10	CHIP TRANSISTOR	UN2212
Q 215	260P806O10	CHIP TRANSISTOR	DTA124EK
Q 2A0	260P817O30	CHIP TRANSISTOR	2SA1037K-S
Q 2A1	260P817O30	CHIP TRANSISTOR	2SA1037K-S
Q 2A2	260P817O30	CHIP TRANSISTOR	2SA1037K-S
Q 2B2	261P005O10	CHIP TRANSISTOR	2SC3123
Q 2B3	261P005O10	CHIP TRANSISTOR	2SC3123
Q 2B4	261P005O10	CHIP TRANSISTOR	2SC3123
Q 2B5	260P818O30	CHIP TRANSISTOR	2SC2412KS
Q 2B6	260P818O30	CHIP TRANSISTOR	2SC2412KS
Q 2B8	260P818O30	CHIP TRANSISTOR	2SC2412KS
Q 2B9	260P818O30	CHIP TRANSISTOR	2SC2412KS
Q 2C1	260P818O30	CHIP TRANSISTOR	2SC2412KS
Q 2C8	260P807O10	CHIP TRANSISTOR	UN2212
Q 2C9	260P807O10	CHIP TRANSISTOR	UN2212
Q 300	260P818O30	CHIP TRANSISTOR	2SC2412KS
Q 301	260P818O30	CHIP TRANSISTOR	2SC2412KS
Q 302	260P807O10	CHIP TRANSISTOR	UN2212
Q 303	260P817O30	CHIP TRANSISTOR	2SA1037K-S
Q 304	260P836O90	CHIP TRANSISTOR	2SC3326-A,B
Q 305	260P836O90	CHIP TRANSISTOR	2SC3326-A,B
Q 350	260P807O10	CHIP TRANSISTOR	UN2212
Q 351	260P817O30	CHIP TRANSISTOR	2SA1037K-S
Q 352	260P818O30	CHIP TRANSISTOR	2SC2412KS
Q 353	260P836O90	CHIP TRANSISTOR	2SC3326-A,B
Q 354	260P818O30	CHIP TRANSISTOR	2SC2412KS
Q 355	260P836O90	CHIP TRANSISTOR	2SC3326-A,B
Q 520	261P005O10	CHIP TRANSISTOR	2SC3123
Q 521	260P807O10	CHIP TRANSISTOR	UN2212
Q 5A0	260P897O10	CHIP TRANSISTOR	2SA1461-Y23
Q 5A1	260P899O10	CHIP TRANSISTOR	2SC3734-B23
Q 5A2	260P897O10	CHIP TRANSISTOR	2SA1461-Y23
Q 5A3	260P899O10	CHIP TRANSISTOR	2SC3734-B23
Q 5A4	260P897O10	CHIP TRANSISTOR	2SA1461-Y23
Q 5A5	260P899O10	CHIP TRANSISTOR	2SC3734-B23
Q 5A6	260P897O10	CHIP TRANSISTOR	2SA1461-Y23
Q 5A7	260P899O10	CHIP TRANSISTOR	2SC3734-B23
Q 5A8	260P897O10	CHIP TRANSISTOR	2SA1461-Y23
Q 5A9	260P899O10	CHIP TRANSISTOR	2SC3734-B23
Q 5B0	260P897O10	CHIP TRANSISTOR	2SA1461-Y23
Q 5B1	260P899O10	CHIP TRANSISTOR	2SC3734-B23
Q 5B2	260P897O10	CHIP TRANSISTOR	2SA1461-Y23
Q 5B3	260P899O10	CHIP TRANSISTOR	2SC3734-B23
Q 5B4	260P897O10	CHIP TRANSISTOR	2SA1461-Y23
Q 5B5	260P899O10	CHIP TRANSISTOR	2SC3734-B23
Q 5B6	260P899O10	CHIP TRANSISTOR	2SC3734-B23
Q 5B7	260P899O10	CHIP TRANSISTOR	2SC3734-B23
Q 5B8	260P899O10	CHIP TRANSISTOR	2SC3734-B23
Q 5B9	260P899O10	CHIP TRANSISTOR	2SC3734-B23
Q 5C0	260P899O10	CHIP TRANSISTOR	2SC3734-B23
Q 5F0	260P897O10	CHIP TRANSISTOR	2SA1461-Y23
Q 5F1	260P899O10	CHIP TRANSISTOR	2SC3734-B23
Q 5F2	260P897O10	CHIP TRANSISTOR	2SA1461-Y23
Q 5F3	260P899O10	CHIP TRANSISTOR	2SC3734-B23

SYMBOL No.	PARTS No.	PARTS NAME	DESCRIPTION
Q 5F4	260P897O10	CHIP TRANSISTOR	2SA1461-Y23
Q 5F5	260P899O10	CHIP TRANSISTOR	2SC3734-B23
Q 5F6	260P897O10	CHIP TRANSISTOR	2SA1461-Y23
Q 5F7	260P899O10	CHIP TRANSISTOR	2SC3734-B23
Q 5F8	260P897O10	CHIP TRANSISTOR	2SA1461-Y23
Q 5F9	260P899O10	CHIP TRANSISTOR	2SC3734-B23
Q 5G0	260P897O10	CHIP TRANSISTOR	2SA1461-Y23
Q 5G1	260P899O10	CHIP TRANSISTOR	2SC3734-B23
Q 5G2	260P897O10	CHIP TRANSISTOR	2SA1461-Y23
Q 5G3	260P899O10	CHIP TRANSISTOR	2SC3734-B23
Q 5G4	260P897O10	CHIP TRANSISTOR	2SA1461-Y23
Q 5G5	260P899O10	CHIP TRANSISTOR	2SC3734-B23
Q 5G6	260P899O10	CHIP TRANSISTOR	2SC3734-B23
Q 5G7	260P899O10	CHIP TRANSISTOR	2SC3734-B23
Q 5G8	260P899O10	CHIP TRANSISTOR	2SC3734-B23
Q 5G9	260P899O10	CHIP TRANSISTOR	2SC3734-B23
Q 5H0	260P899O10	CHIP TRANSISTOR	2SC3734-B23
Q 5L0	260P897O10	CHIP TRANSISTOR	2SA1461-Y23
Q 5L1	260P899O10	CHIP TRANSISTOR	2SC3734-B23
Q 5L2	260P897O10	CHIP TRANSISTOR	2SA1461-Y23
Q 5L3	260P899O10	CHIP TRANSISTOR	2SC3734-B23
Q 5L4	260P897O10	CHIP TRANSISTOR	2SA1461-Y23
Q 5L5	260P899O10	CHIP TRANSISTOR	2SC3734-B23
Q 5L6	260P897O10	CHIP TRANSISTOR	2SA1461-Y23
Q 5L7	260P899O10	CHIP TRANSISTOR	2SC3734-B23
Q 5L8	260P897O10	CHIP TRANSISTOR	2SA1461-Y23
Q 5L9	260P899O10	CHIP TRANSISTOR	2SC3734-B23
Q 5M0	260P897O10	CHIP TRANSISTOR	2SA1461-Y23
Q 5M1	260P899O10	CHIP TRANSISTOR	2SC3734-B23
Q 5M2	260P897O10	CHIP TRANSISTOR	2SA1461-Y23
Q 5M3	260P899O10	CHIP TRANSISTOR	2SC3734-B23
Q 5M4	260P897O10	CHIP TRANSISTOR	2SA1461-Y23
Q 5M5	260P899O10	CHIP TRANSISTOR	2SC3734-B23
Q 5M6	260P899O10	CHIP TRANSISTOR	2SC3734-B23
Q 5M7	260P899O10	CHIP TRANSISTOR	2SC3734-B23
Q 5M8	260P899O10	CHIP TRANSISTOR	2SC3734-B23
Q 5M9	260P899O10	CHIP TRANSISTOR	2SC3734-B23
Q 5N0	260P899O10	CHIP TRANSISTOR	2SC3734-B23
Q 5R3	260P817O30	CHIP TRANSISTOR	2SA1037K-S
Q 5R4	260P817O30	CHIP TRANSISTOR	2SA1037K-S
Q 600	260P898O10	CHIP TRANSISTOR	2SC2954
Q 601	260P898O10	CHIP TRANSISTOR	2SC2954
Q 602	260P898O10	CHIP TRANSISTOR	2SC2954
Q 603	260P701O10	CHIP TRANSISTOR	2SA1213-Y
Q 604	260P868O10	CHIP TRANSISTOR	2SC2873-Y
Q 701	260P806O10	CHIP TRANSISTOR	DTA124EK
Q 702	260P818O30	CHIP TRANSISTOR	2SC2412KS
Q 703	260P806O10	CHIP TRANSISTOR	DTA124EK
Q 704	260P818O30	CHIP TRANSISTOR	2SC2412KS
Q 705	260P806O10	CHIP TRANSISTOR	DTA124EK
Q 706	260P818O30	CHIP TRANSISTOR	2SC2412KS
Q 707	260P807O10	CHIP TRANSISTOR	UN2212
Q 708	260P863O10	CHIP TRANSISTOR	IMT1 <T1>
Q 709	260P863O10	CHIP TRANSISTOR	IMT1 <T1>
Q 710	260P806O10	CHIP TRANSISTOR	DTA124EK
Q 711	260P806O10	CHIP TRANSISTOR	DTA124EK
Q 712	260P806O10	CHIP TRANSISTOR	DTA124EK

SYMBOL No.	PARTS No.	PARTS NAME	DESCRIPTION
Q 713	260P846O10	CHIP TRANSISTOR	DTC143EK
Q 714	260P806O10	CHIP TRANSISTOR	DTA124EK
Q 715	260P806O10	CHIP TRANSISTOR	DTA124EK
Q 716	260P806O10	CHIP TRANSISTOR	DTA124EK
Q 717	260P806O10	CHIP TRANSISTOR	DTA124EK
Q 718	260P806O10	CHIP TRANSISTOR	DTA124EK
Q 721	260P807O10	CHIP TRANSISTOR	UN2212
Q 7A0	260P807O10	CHIP TRANSISTOR	UN2212
Q 900	261P086O10	TRANSISTOR	IRFP460
Q 901	261P086O10	TRANSISTOR	IRFP460
Q 902	260P868O10	CHIP TRANSISTOR	2SC2873-Y
Q 903	260P701O10	CHIP TRANSISTOR	2SA1213-Y
Q 904	260P807O10	CHIP TRANSISTOR	UN2212
Q 951	260P818O30	CHIP TRANSISTOR	2SC2412KS
Q 9A0	260P807O10	CHIP TRANSISTOR	UN2212
Q 9A1	260P807O10	CHIP TRANSISTOR	UN2212
Q 9A2	260P807O10	CHIP TRANSISTOR	UN2212
Q 9A3	260P807O10	CHIP TRANSISTOR	UN2212
Q 9A4	260P807O10	CHIP TRANSISTOR	UN2212
Q 9A5	260P807O10	CHIP TRANSISTOR	UN2212
Q 9A6	260P807O10	CHIP TRANSISTOR	UN2212
Q 9B0	261P083O10	TRANSISTOR	2SA1470-S
Q 9M0	260P818O30	CHIP TRANSISTOR	2SC2412KS
Q 9M1	260P818O30	CHIP TRANSISTOR	2SC2412KS
Q 9M2	260P818O30	CHIP TRANSISTOR	2SC2412KS
Q 9V0	261P085O10	TRANSISTOR	2SK2915
Q 9V1	261P085O10	TRANSISTOR	2SK2915
Q 9X0	260P868O10	CHIP TRANSISTOR	2SC2873-Y
Q 9X1	260P701O10	CHIP TRANSISTOR	2SA1213-Y
Q 9X2	260P806O10	CHIP TRANSISTOR	DTA124EK
Q 9X3	260P818O30	CHIP TRANSISTOR	2SC2412KS
Q 9X4	260P818O30	CHIP TRANSISTOR	2SC2412KS
Q 9X5	260P818O30	CHIP TRANSISTOR	2SC2412KS
Q 9X6	260P818O30	CHIP TRANSISTOR	2SC2412KS
Q 9X7	260P807O10	CHIP TRANSISTOR	UN2212
	DIODES		
D 201	264P830O20	CHIP DIODE	DA204U
D 202	264P830O20	CHIP DIODE	DA204U
D 203	264P830O20	CHIP DIODE	DA204U
D 204	264P815O60	CHIP DIODE	RD5.1MB1
D 205	264P815O60	CHIP DIODE	RD5.1MB1
D 206	264P830O20	CHIP DIODE	DA204U
D 207	264P830O20	CHIP DIODE	DA204U
D 208	264P830O20	CHIP DIODE	DA204U
D 209	264P815O60	CHIP DIODE	RD5.1MB1
D 210	264P815O60	CHIP DIODE	RD5.1MB1
D 211	264P830O20	CHIP DIODE	DA204U
D 214	264P830O20	CHIP DIODE	DA204U
D 215	264P830O20	CHIP DIODE	DA204U
D 216	264P830O20	CHIP DIODE	DA204U
D 218	264P830O20	CHIP DIODE	DA204U
D 219	264P769O20	CHIP DIODE	RD16UMB2
D 220	264P769O20	CHIP DIODE	RD16UMB2
D 225	264P769O20	CHIP DIODE	RD16UMB2
D 226	264P769O20	CHIP DIODE	RD16UMB2
D 231	264P830O20	CHIP DIODE	DA204U

COMMON USE

SYMBOL No.	PARTS No.	PARTS NAME	DESCRIPTION
D 232	264P830O20	CHIP DIODE	DA204U
D 233	264P830O20	CHIP DIODE	DA204U
D 234	264P815O60	CHIP DIODE	RD5.1MB1
D 235	264P815O60	CHIP DIODE	RD5.1MB1
D 2A1	264P807O10	CHIP DIODE	DAP202K
D 300	264P814O30	CHIP DIODE	MA142WA
D 301	264P828O10	CHIP DIODE	DAN202U
D 302	264P814O30	CHIP DIODE	MA142WA
D 303	264P828O10	CHIP DIODE	DAN202U
D 304	264P814O30	CHIP DIODE	MA142WA
D 305	264P828O10	CHIP DIODE	DAN202U
D 306	264P828O10	CHIP DIODE	DAN202U
D 307	264P814O30	CHIP DIODE	MA142WA
D 5A0	264P828O10	CHIP DIODE	DAN202U
D 5A1	264P814O30	CHIP DIODE	MA142WA
D 5A2	264P828O10	CHIP DIODE	DAN202U
D 5A3	264P814O30	CHIP DIODE	MA142WA
D 5A4	264P828O10	CHIP DIODE	DAN202U
D 5A5	264P814O30	CHIP DIODE	MA142WA
D 5A6	264P828O10	CHIP DIODE	DAN202U
D 5A7	264P814O30	CHIP DIODE	MA142WA
D 5F0	264P828O10	CHIP DIODE	DAN202U
D 5F1	264P814O30	CHIP DIODE	MA142WA
D 5F2	264P828O10	CHIP DIODE	DAN202U
D 5F3	264P814O30	CHIP DIODE	MA142WA
D 5F4	264P828O10	CHIP DIODE	DAN202U
D 5F5	264P814O30	CHIP DIODE	MA142WA
D 5F6	264P828O10	CHIP DIODE	DAN202U
D 5F7	264P814O30	CHIP DIODE	MA142WA
D 5L0	264P828O10	CHIP DIODE	DAN202U
D 5L1	264P814O30	CHIP DIODE	MA142WA
D 5L2	264P828O10	CHIP DIODE	DAN202U
D 5L3	264P814O30	CHIP DIODE	MA142WA
D 5L4	264P828O10	CHIP DIODE	DAN202U
D 5L5	264P814O30	CHIP DIODE	MA142WA
D 5L6	264P828O10	CHIP DIODE	DAN202U
D 5L7	264P814O30	CHIP DIODE	MA142WA
D 603	264P826O10	CHIP DIODE	DA204K
D 604	264P826O10	CHIP DIODE	DA204K
D 605	264P826O10	CHIP DIODE	DA204K
D 606	264P826O10	CHIP DIODE	DA204K
D 607	264P826O10	CHIP DIODE	DA204K
D 608	264P828O10	CHIP DIODE	DAN202U
D 609	264P828O10	CHIP DIODE	DAN202U
D 700	264P816O80	CHIP DIODE	RD10MB
D 701	264P814O30	CHIP DIODE	MA142WA
D 702	264P814O30	CHIP DIODE	MA142WA
D 703	264P830O20	CHIP DIODE	DA204U
D 704	264P830O20	CHIP DIODE	DA204U
D 705	264P830O20	CHIP DIODE	DA204U
D 706	264P814O30	CHIP DIODE	MA142WA
D 707	264P815O30	CHIP DIODE	RD4.7MB2
D 708	264P815O10	CHIP DIODE	RD2.4MB
D 709	264P815O10	CHIP DIODE	RD2.4MB
D 710	264P815O10	CHIP DIODE	RD2.4MB
D 7A0	264P807O10	CHIP DIODE	DAP202K

SYMBOL No.	PARTS No.	PARTS NAME	DESCRIPTION
D 806	264P814O30	CHIP DIODE	MA142WA
D 8A6	264P814O30	CHIP DIODE	MA142WA
D 8M6	264P814O30	CHIP DIODE	MA142WA
⚠ D 900	264P623O10	DIODE	RBV-1506
D 901	264P762O10	DIODE	YG912S6
D 902	264P527O30	DIODE	D1NS4/AK04
D 903	264P527O30	DIODE	D1NS4/AK04
D 904	264P770O10	CHIP DIODE	RD13MB1
D 905	264P543O30	DIODE	EG01C
D 906	264P622O10	DIODE	AL01Z
D 907	264P622O10	DIODE	AL01Z
D 908	264P808O10	CHIP DIODE	DAN202K
D 950	264P244O20	DIODE	HZT33-10
D 951	264P543O30	DIODE	EG01C
D 952	264P622O10	DIODE	AL01Z
D 953	264P622O10	DIODE	AL01Z
D 954	264P622O10	DIODE	AL01Z
D 956	264P566O10	DIODE	FMP-G12S
D 957	264P695O40	DIODE	RK34
D 958	264P761O10	DIODE	FMB-G24H
D 959	264P761O10	DIODE	FMB-G24H
D 960	264P761O10	DIODE	FMB-G24H
D 9M0	264P826O10	CHIP DIODE	DA204K
D 9S0	264P483O90	DIODE	RD5.1FB3
D 9S1	264P483O90	DIODE	RD5.1FB3
D 9V1	264P527O30	DIODE	D1NS4/AK04
D 9V2	264P796O10	DIODE	PA905C6
D 9V3	264P797O10	DIODE	RU30A
D 9V4	264P527O30	DIODE	D1NS4/AK04
D 9V7	264P798O10	TRIGGER DIODE	K1V18
D 9X0	264P816O70	CHIP DIODE	RD9.1MB2
D 9X1	264P849O10	CHIP DIODE	MA728 <2A>
D 9X2	264P816O60	CHIP DIODE	RD8.2MB1
D 9X4	264P808O10	CHIP DIODE	DAN202K
	OTHER SEMICONDUCTORS		
	265P110O30	POSITIVE THERMISTOR	EC2F103A2
	FILTERS		
L 200	409P865O20	EMI FILTER	BLM11A601S
L 201	409P865O20	EMI FILTER	BLM11A601S
L 202	409P865O20	EMI FILTER	BLM11A601S
L 203	409P865O20	EMI FILTER	BLM11A601S
L 204	409P865O20	EMI FILTER	BLM11A601S
L 205	409P865O20	EMI FILTER	BLM11A601S
L 210	409P865O20	EMI FILTER	BLM11A601S
L 211	409P865O20	EMI FILTER	BLM11A601S
L 212	409P865O20	EMI FILTER	BLM11A601S
L 220	409P865O20	EMI FILTER	BLM11A601S
L 221	409P865O20	EMI FILTER	BLM11A601S
L 234	409P777O10	EMI FILTER	BLM21B03 2012
L 235	409P777O10	EMI FILTER	BLM21B03 2012
L 236	409P777O10	EMI FILTER	BLM21B03 2012
L 237	409P777O10	EMI FILTER	BLM21B03 2012
L 241	409P865O20	EMI FILTER	BLM11A601S
L 250	409P865O20	EMI FILTER	BLM11A601S

COMMON USE

SYMBOL No.	PARTS No.	PARTS NAME	DESCRIPTION
L 260	409P865O20	EMI FILTER	BLM11A601S
L 280	409P777O10	EMI FILTER	BLM21B03 2012
L 281	409P777O10	EMI FILTER	BLM21B03 2012
L 282	409P777O10	EMI FILTER	BLM21B03 2012
L 283	409P777O10	EMI FILTER	BLM21B03 2012
L 284	409P777O10	EMI FILTER	BLM21B03 2012
L 285	409P777O10	EMI FILTER	BLM21B03 2012
L 286	409P777O10	EMI FILTER	BLM21B03 2012
L 287	409P777O10	EMI FILTER	BLM21B03 2012
L 288	409P777O10	EMI FILTER	BLM21B03 2012
L 289	409P777O10	EMI FILTER	BLM21B03 2012
L 290	409P777O10	EMI FILTER	BLM21B03 2012
L 291	409P777O20	CHIP EMI FILTER	BLM21A05
L 294	409P777O20	CHIP EMI FILTER	BLM21A05
L 2A5	409P865O20	EMI FILTER	BLM11A601S
L 2B3	409P865O20	EMI FILTER	BLM11A601S
L 2B6	409P865O20	EMI FILTER	BLM11A601S
L 2B7	409P865O20	EMI FILTER	BLM11A601S
L 2C0	409P865O20	EMI FILTER	BLM11A601S
L 2Q0	409P865O20	EMI FILTER	BLM11A601S
L 2Q1	409P865O20	EMI FILTER	BLM11A601S
L 2Q3	409P865O20	EMI FILTER	BLM11A601S
L 2Q4	409P865O20	EMI FILTER	BLM11A601S
L 2Q5	409P865O20	EMI FILTER	BLM11A601S
L 2Q6	409P865O20	EMI FILTER	BLM11A601S
L 2Q7	409P865O20	EMI FILTER	BLM11A601S
L 300	409P865O20	EMI FILTER	BLM11A601S
L 307	409P865O20	EMI FILTER	BLM11A601S
L 310	409P865O20	EMI FILTER	BLM11A601S
L 315	409P865O60	EMI FILTER	BLM11B141S
L 316	409P865O60	EMI FILTER	BLM11B141S
L 317	409P865O60	EMI FILTER	BLM11B141S
L 318	409P865O60	EMI FILTER	BLM11B141S
L 327	409P865O60	EMI FILTER	BLM11B141S
L 328	409P865O30	EMI FILTER	BLM11A102S
L 354	409P865O80	EMI FILTER	BLM11P600S
L 355	409P865O80	EMI FILTER	BLM11P600S
L 356	409P865O80	EMI FILTER	BLM11P600S
L 357	409P865O80	EMI FILTER	BLM11P600S
L 358	409P865O80	EMI FILTER	BLM11P600S
L 359	409P865O80	EMI FILTER	BLM11P600S
L 360	409P865O70	EMI FILTER	BLM11P600S
L 401	409P865O70	EMI FILTER	BLM11P300S
L 430	409P865O70	EMI FILTER	BLM11P300S
L 440	409P865O70	EMI FILTER	BLM11P300S
L 441	409P865O20	EMI FILTER	BLM11A601S
L 460	409P865O70	EMI FILTER	BLM11P300S
L 490	409P865O70	EMI FILTER	BLM11P300S
L 4B3	409P865O20	EMI FILTER	BLM11A601S
L 4B4	409P865O20	EMI FILTER	BLM11A601S
L 4B6	409P865O20	EMI FILTER	BLM11A601S
L 4C1	409P865O20	EMI FILTER	BLM11A601S
L 4G3	409P865O20	EMI FILTER	BLM11A601S
L 4G4	409P865O20	EMI FILTER	BLM11A601S
L 4G6	409P865O20	EMI FILTER	BLM11A601S
L 4P1	409P865O20	EMI FILTER	BLM11A601S
L 4R3	409P865O20	EMI FILTER	BLM11A601S
L 4R4	409P865O20	EMI FILTER	BLM11A601S
L 4R6	409P865O20	EMI FILTER	BLM11A601S
L 4S0	409P865O20	EMI FILTER	BLM11A601S
L 4S1	409P865O20	EMI FILTER	BLM11A601S
L 4U0	409P865O70	EMI FILTER	BLM11P300S
L 4X1	409P865O20	EMI FILTER	BLM11A601S
L 500	409P865O20	EMI FILTER	BLM11A601S
L 501	409P865O20	EMI FILTER	BLM11A601S
L 520	409P865O20	EMI FILTER	BLM11A601S
L 521	409P865O20	EMI FILTER	BLM11A601S
L 522	409P865O20	EMI FILTER	BLM11A601S
L 523	409P865O20	EMI FILTER	BLM11A601S
L 524	409P865O20	EMI FILTER	BLM11A601S
L 530	409P865O20	EMI FILTER	BLM11A601S
L 531	409P865O20	EMI FILTER	BLM11A601S
L 532	409P865O20	EMI FILTER	BLM11A601S
L 533	409P865O20	EMI FILTER	BLM11A601S
L 534	409P865O20	EMI FILTER	BLM11A601S
L 535	409P865O20	EMI FILTER	BLM11A601S
L 536	409P865O20	EMI FILTER	BLM11A601S
L 537	409P865O20	EMI FILTER	BLM11A601S
L 538	409P865O20	EMI FILTER	BLM11A601S
L 539	409P865O20	EMI FILTER	BLM11A601S
L 549	409P865O20	EMI FILTER	BLM11A601S
L 551	409P865O20	EMI FILTER	BLM11A601S
L 552	409P865O20	EMI FILTER	BLM11A601S
L 554	409P865O20	EMI FILTER	BLM11A601S
L 555	409P865O20	EMI FILTER	BLM11A601S
L 5A0	409P865O20	EMI FILTER	BLM11A601S
L 5F0	409P865O20	EMI FILTER	BLM11A601S
L 5L0	409P865O20	EMI FILTER	BLM11A601S
L 5M0	409P865O20	EMI FILTER	BLM11A601S
L 5R0	409P865O20	EMI FILTER	BLM11A601S
L 5R2	409P865O20	EMI FILTER	BLM11A601S
L 5R3	409P865O20	EMI FILTER	BLM11A601S
L 601	409P865O20	EMI FILTER	BLM11A601S
L 604	409P865O20	EMI FILTER	BLM11A601S
L 606	409P865O20	EMI FILTER	BLM11A601S
L 607	409P865O20	EMI FILTER	BLM11A601S
L 609	409P865O20	EMI FILTER	BLM11A601S
L 610	409P865O20	EMI FILTER	BLM11A601S
L 612	409P865O20	EMI FILTER	BLM11A601S
L 613	409P865O20	EMI FILTER	BLM11A601S
L 615	409P865O20	EMI FILTER	BLM11A601S
L 616	409P865O20	EMI FILTER	BLM11A601S
L 6E0	409P865O20	EMI FILTER	BLM11A601S
L 6E1	409P865O20	EMI FILTER	BLM11A601S
L 6E2	409P865O20	EMI FILTER	BLM11A601S
L 6E3	409P865O20	EMI FILTER	BLM11A601S
L 700	409P865O20	EMI FILTER	BLM11A601S
L 710	409P865O20	EMI FILTER	BLM11A601S
L 711	409P865O20	EMI FILTER	BLM11A601S
L 713	409P865O20	EMI FILTER	BLM11A601S
L 714	409P865O20	EMI FILTER	BLM11A601S
L 715	409P865O20	EMI FILTER	BLM11A601S
L 716	409P865O20	EMI FILTER	BLM11A601S

COMMON USE

SYMBOL No.	PARTS No.	PARTS NAME	DESCRIPTION
L734	409P865O20	EMI FILTER	BLM11A601S
L735	409P865O20	EMI FILTER	BLM11A601S
L736	409P865O20	EMI FILTER	BLM11A601S
L739	409P865O20	EMI FILTER	BLM11A601S
L761	409P865O20	EMI FILTER	BLM11A601S
L762	409P865O20	EMI FILTER	BLM11A601S
L763	409P865O20	EMI FILTER	BLM11A601S
L764	409P865O20	EMI FILTER	BLM11A601S
L765	409P865O20	EMI FILTER	BLM11A601S
L767	409P865O20	EMI FILTER	BLM11A601S
L768	409P865O20	EMI FILTER	BLM11A601S
L769	409P865O20	EMI FILTER	BLM11A601S
L770	409P865O20	EMI FILTER	BLM11A601S
L771	409P865O20	EMI FILTER	BLM11A601S
L772	409P865O20	EMI FILTER	BLM11A601S
L773	409P865O20	EMI FILTER	BLM11A601S
L774	409P865O20	EMI FILTER	BLM11A601S
L775	409P865O20	EMI FILTER	BLM11A601S
L776	409P865O20	EMI FILTER	BLM11A601S
L777	409P865O20	EMI FILTER	BLM11A601S
L778	409P865O20	EMI FILTER	BLM11A601S
L779	409P865O20	EMI FILTER	BLM11A601S
L780	409P865O20	EMI FILTER	BLM11A601S
L781	409P865O20	EMI FILTER	BLM11A601S
L782	409P865O20	EMI FILTER	BLM11A601S
L783	409P865O20	EMI FILTER	BLM11A601S
L784	409P865O20	EMI FILTER	BLM11A601S
L785	409P865O20	EMI FILTER	BLM11A601S
L786	409P865O20	EMI FILTER	BLM11A601S
L787	409P865O20	EMI FILTER	BLM11A601S
L788	409P865O20	EMI FILTER	BLM11A601S
L789	409P865O20	EMI FILTER	BLM11A601S
L790	409P865O20	EMI FILTER	BLM11A601S
L791	409P865O20	EMI FILTER	BLM11A601S
L792	409P865O20	EMI FILTER	BLM11A601S
L793	409P777O90	EMI FILTER	BLM21P300S 2012
L794	409P777O90	EMI FILTER	BLM21P300S 2012
L795	409P865O20	EMI FILTER	BLM11A601S
L796	409P777O90	EMI FILTER	BLM21P300S 2012
L797	409P777O90	EMI FILTER	BLM21P300S 2012
L798	409P865O20	EMI FILTER	BLM11A601S
L799	409P865O20	EMI FILTER	BLM11A601S
L7A0	409P865O20	EMI FILTER	BLM11A601S
L7A1	409P865O20	EMI FILTER	BLM11A601S
L7A2	409P865O20	EMI FILTER	BLM11A601S
L7A3	409P865O20	EMI FILTER	BLM11A601S
L7A4	409P865O20	EMI FILTER	BLM11A601S
L7A5	409P865O20	EMI FILTER	BLM11A601S
L7A6	409P865O20	EMI FILTER	BLM11A601S
L7A7	409P865O20	EMI FILTER	BLM11A601S
L7A8	409P865O20	EMI FILTER	BLM11A601S
L7A9	409P865O20	EMI FILTER	BLM11A601S
L7B0	409P865O20	EMI FILTER	BLM11A601S
L7B1	409P865O20	EMI FILTER	BLM11A601S
L7B2	409P865O20	EMI FILTER	BLM11A601S
L7B3	409P865O20	EMI FILTER	BLM11A601S
L7B4	409P865O20	EMI FILTER	BLM11A601S

SYMBOL No.	PARTS No.	PARTS NAME	DESCRIPTION
L7B5	409P865O20	EMI FILTER	BLM11A601S
L7B6	409P865O20	EMI FILTER	BLM11A601S
L7B7	409P865O20	EMI FILTER	BLM11A601S
L7C1	409P865O20	EMI FILTER	BLM11A601S
L7C2	409P865O20	EMI FILTER	BLM11A601S
L7C3	409P865O20	EMI FILTER	BLM11A601S
L7C5	409P865O20	EMI FILTER	BLM11A601S
L7C6	409P865O20	EMI FILTER	BLM11A601S
L7C7	409P865O20	EMI FILTER	BLM11A601S
L7C8	409P865O20	EMI FILTER	BLM11A601S
L7C9	409P865O20	EMI FILTER	BLM11A601S
L7D0	409P865O20	EMI FILTER	BLM11A601S
L7D1	409P865O20	EMI FILTER	BLM11A601S
L7D2	409P865O20	EMI FILTER	BLM11A601S
L7D3	409P865O20	EMI FILTER	BLM11A601S
L7D4	409P865O20	EMI FILTER	BLM11A601S
L7D5	409P865O20	EMI FILTER	BLM11A601S
L7D6	409P865O20	EMI FILTER	BLM11A601S
L7D7	409P865O20	EMI FILTER	BLM11A601S
L7D8	409P865O20	EMI FILTER	BLM11A601S
L7D9	409P865O20	EMI FILTER	BLM11A601S
L7E0	409P865O20	EMI FILTER	BLM11A601S
L7E1	409P865O20	EMI FILTER	BLM11A601S
L7E2	409P865O20	EMI FILTER	BLM11A601S
L7E3	409P865O20	EMI FILTER	BLM11A601S
L7E4	409P865O20	EMI FILTER	BLM11A601S
L7E8	409P865O20	EMI FILTER	BLM11A601S
L7E9	409P865O20	EMI FILTER	BLM11A601S
L7F0	409P865O20	EMI FILTER	BLM11A601S
L7F1	409P865O20	EMI FILTER	BLM11A601S
L7F2	409P865O20	EMI FILTER	BLM11A601S
L7F3	409P865O20	EMI FILTER	BLM11A601S
L7F4	409P865O20	EMI FILTER	BLM11A601S
L7F5	409P865O20	EMI FILTER	BLM11A601S
L7F6	409P865O20	EMI FILTER	BLM11A601S
L7F7	409P865O20	EMI FILTER	BLM11A601S
L7F8	409P865O20	EMI FILTER	BLM11A601S
L7X0	409P865O20	EMI FILTER	BLM11A601S
L7X1	409P865O20	EMI FILTER	BLM11A601S
L7X2	409P865O20	EMI FILTER	BLM11A601S
L7X3	409P865O20	EMI FILTER	BLM11A601S
L7Z0	409P865O20	EMI FILTER	BLM11A601S
L800	409P865O20	EMI FILTER	BLM11A601S
L801	409P865O20	EMI FILTER	BLM11A601S
L802	409P865O20	EMI FILTER	BLM11A601S
L803	409P865O20	EMI FILTER	BLM11A601S
L804	409P865O20	EMI FILTER	BLM11A601S
L805	409P865O20	EMI FILTER	BLM11A601S
L806	409P865O20	EMI FILTER	BLM11A601S
L8A0	409P865O20	EMI FILTER	BLM11A601S
L8A1	409P865O20	EMI FILTER	BLM11A601S
L8A2	409P865O20	EMI FILTER	BLM11A601S
L8A3	409P865O20	EMI FILTER	BLM11A601S
L8A4	409P865O20	EMI FILTER	BLM11A601S
L8A5	409P865O20	EMI FILTER	BLM11A601S
L8A6	409P865O20	EMI FILTER	BLM11A601S
L8M0	409P865O20	EMI FILTER	BLM11A601S

COMMON USE

SYMBOL No.	PARTS No.	PARTS NAME	DESCRIPTION
L 8M1	409P865O20	EMI FILTER	BLM11A601S
L 8M2	409P865O20	EMI FILTER	BLM11A601S
L 8M3	409P865O20	EMI FILTER	BLM11A601S
L 8M4	409P865O20	EMI FILTER	BLM11A601S
L 8M6	409P865O20	EMI FILTER	BLM11A601S
⚠L 9F1	351P173O10	LINE FILTER	SC-05-100J
⚠L 9F2	351P173O10	LINE FILTER	SC-05-100J
	COILS		
L 2A1	325C241O70	CHIP COIL	22µH-K
L 2A3	325C241O70	CHIP COIL	22µH-K
L 2A4	325C241O70	CHIP COIL	22µH-K
L 2B2	325C241O70	CHIP COIL	22µH-K
L 2B4	325C241O70	CHIP COIL	22µH-K
L 2B5	325C242O10	CHIP COIL	47µH-K
L 2B8	325C241O70	CHIP COIL	22µH-K
L 2B9	325C242O10	CHIP COIL	47µH-K
L 2C7	325C242O90	CHIP COIL	220µH-K
L 2N1	325C241O30	CHIP COIL	10µH-K
L 2N3	325C241O30	CHIP COIL	10µH-K
L 2N4	325C241O30	CHIP COIL	10µH-K
L 350	325C241O70	CHIP COIL	22µH-K
L 352	325C241O70	CHIP COIL	22µH-K
L 353	325C241O70	CHIP COIL	22µH-K
L 550	325C241O30	CHIP COIL	10µH-K
L 600	325C242O50	CHIP COIL	100µH-K
L 603	325C242O50	CHIP COIL	100µH-K
L 605	325C242O50	CHIP COIL	100µH-K
⚠L 900	351P179O10	CHOKE COIL	DC-11110
L 901	411P001O60	FERRITE LEAD	BF60-5.5X5.0X1.6
L 902	411P012O10	FERRITE BEADS	B-6-31A1-A
L 950	411D009O20	FERRITE CORE	
L 9A0	321C152O80	RF COIL	180µH-K
L 9A1	321C143O40	RF COIL	560µH-K
L 9A2	321C152O50	RF COIL	100µH-K
L 9A3	321C152O60	RF COIL	120µH-K 11X14
⚠L 9A4	351P178O10	COIL	SN10-500
L 9A5	321C152O40	RF COIL	82µH-K
L 9A6	321C152O70	RF COIL	150µH-K
⚠L 9F0	351P079O10	CHOKE COIL	SN12-500J
⚠L 9V1	351P174O10	CHOKE COIL	SHB-08-350V
L 9V2	411P011O10	FERRITE BEADS	ZBF-503S-P
L 9V3	411P011O10	FERRITE BEADS	ZBF-503S-P
L 9V4	411P011O10	FERRITE BEADS	ZBF-503S-P
L 9V5	411P011O10	FERRITE BEADS	ZBF-503S-P
L 9V6	411P011O10	FERRITE BEADS	ZBF-503S-P
	411D038O10	FERRITE CORE	HF70SH
	TRANSFORMERS		
⚠T 950	350P722O30	POWER TRANSFORMER	
T 9V0	389P003O10	TRANSFORMER	
T 9V1	939P748O10	HV BLOCK	
	VARIABLE RESISTORS		
VR9V0	127C300O40	SEMIFIXED RESISTOR	1/2W B1kΩ-K

SYMBOL No.	PARTS No.	PARTS NAME	DESCRIPTION
	RESISTORS		
L 2Q2	103P509O50	CHIP RESISTOR	0Ω (RM1608)
L 328	103P509O50	CHIP RESISTOR	0Ω (RM1608)
R 201	103P489O90	CHIP METAL RESISTOR	1/4W 75Ω-J
R 202	103P489O90	CHIP METAL RESISTOR	1/4W 75Ω-J
R 203	103P489O90	CHIP METAL RESISTOR	1/4W 75Ω-J
R 207	103P498O90	CHIP METAL RESISTOR	1/16W 470kΩ-F
R 211	103P497O30	CHIP METAL RESISTOR	1/16W 100kΩ-F
R 212	103P497O30	CHIP METAL RESISTOR	1/16W 100kΩ-F
R 213	103P497O30	CHIP METAL RESISTOR	1/16W 100kΩ-F
R 214	103P497O30	CHIP METAL RESISTOR	1/16W 100kΩ-F
R 215	103P497O30	CHIP METAL RESISTOR	1/16W 100kΩ-F
R 216	103P508O80	CHIP RESISTOR	1/16W 4.7Ω-K
R 217	103P508O80	CHIP RESISTOR	1/16W 4.7Ω-K
R 218	103P508O80	CHIP RESISTOR	1/16W 4.7Ω-K
R 219	103P493O10	CHIP METAL RESISTOR	1/16W 1.8kΩ-F
R 220	103P492O90	CHIP RESISTOR	1/16W1.5kΩ-F
R 221	103P492O70	CHIP METAL RESISTOR	1/16W 1.2kΩ-F
R 222	103P493O10	CHIP METAL RESISTOR	1/16W 1.8kΩ-F
R 223	103P492O90	CHIP RESISTOR	1/16W1.5kΩ-F
R 224	103P492O70	CHIP METAL RESISTOR	1/16W 1.2kΩ-F
R 225	103P490O90	CHIP METAL RESISTOR	1/16W 220Ω-F
R 226	103P490O90	CHIP METAL RESISTOR	1/16W 220Ω-F
R 227	103P490O90	CHIP METAL RESISTOR	1/16W 220Ω-F
R 228	103P495O90	CHIP METAL RESISTOR	1/16W 27kΩ-F
R 229	103P495O90	CHIP METAL RESISTOR	1/16W 27kΩ-F
R 230	103P492O50	CHIP METAL RESISTOR	1/16W 1kΩ-F
R 231	103P492O50	CHIP METAL RESISTOR	1/16W 1kΩ-F
R 232	103P492O50	CHIP METAL RESISTOR	1/16W 1kΩ-F
R 233	103P492O50	CHIP METAL RESISTOR	1/16W 1kΩ-F
R 234	103P492O50	CHIP METAL RESISTOR	1/16W 1kΩ-F
R 235	103P492O50	CHIP METAL RESISTOR	1/16W 1kΩ-F
R 236	103P409O90	CHIP RESISTOR	1/10W 75Ω-J
R 237	103P409O90	CHIP RESISTOR	1/10W 75Ω-J
R 238	103P409O90	CHIP RESISTOR	1/10W 75Ω-J
R 239	103P496O50	CHIP METAL RESISTOR	1/16W 47kΩ-F
R 240	103P496O50	CHIP METAL RESISTOR	1/16W 47kΩ-F
R 241	103P496O50	CHIP METAL RESISTOR	1/16W 47kΩ-F
R 242	103P495O90	CHIP METAL RESISTOR	1/16W 27kΩ-F
R 243	103P489O90	CHIP METAL RESISTOR	1/4W 75Ω-J
R 244	103P489O90	CHIP METAL RESISTOR	1/4W 75Ω-J
R 245	103P489O90	CHIP METAL RESISTOR	1/4W 75Ω-J
R 249	103P498O90	CHIP METAL RESISTOR	1/16W 470kΩ-F
R 253	103P490O90	CHIP METAL RESISTOR	1/16W 220Ω-F
R 254	103P490O90	CHIP METAL RESISTOR	1/16W 220Ω-F
R 255	103P490O90	CHIP METAL RESISTOR	1/16W 220Ω-F
R 256	103P497O30	CHIP METAL RESISTOR	1/16W 100kΩ-F
R 257	103P490O10	CHIP METAL RESISTOR	1/16W 100Ω-F
R 258	103P492O90	CHIP RESISTOR	1/16W 1.5kΩ-F
R 259	103P492O90	CHIP RESISTOR	1/16W 1.5kΩ-F
R 261	103P493O20	CHIP METAL RESISTOR	1/16W 2kΩ-F
R 262	103P493O20	CHIP METAL RESISTOR	1/16W 2kΩ-F
R 263	103P493O10	CHIP METAL RESISTOR	1/16W 1.8kΩ-F
R 264	103P492O90	CHIP RESISTOR	1/16W 1.5kΩ-F
R 265	103P492O70	CHIP METAL RESISTOR	1/16W 1.2kΩ-F
R 266	103P493O10	CHIP METAL RESISTOR	1/16W 1.8kΩ-F

COMMON USE

SYMBOL No.	PARTS No.	PARTS NAME	DESCRIPTION
R 267	103P492O90	CHIP RESISTOR	1/16W 1.5kΩ-F
R 268	103P492O70	CHIP METAL RESISTOR	1/16W 1.2kΩ-F
R 275	103P494O10	CHIP METAL RESISTOR	1/16W 4.7kΩ-F
R 276	103P494O10	CHIP METAL RESISTOR	1/16W 4.7kΩ-F
R 277	103P493O70	CHIP METAL RESISTOR	1/16W 3.3kΩ-F
R 278	103P496O50	CHIP METAL RESISTOR	1/16W 47kΩ-F
R 279	103P490O10	CHIP METAL RESISTOR	1/16W 100Ω-F
R 280	103P490O10	CHIP METAL RESISTOR	1/16W 100Ω-F
R 281	103P490O10	CHIP METAL RESISTOR	1/16W 100Ω-F
R 282	103P490O10	CHIP METAL RESISTOR	1/16W 100Ω-F
R 285	103P492O70	CHIP METAL RESISTOR	1/16W 1.2kΩ-F
R 286	103P492O70	CHIP METAL RESISTOR	1/16W 1.2kΩ-F
R 287	103P492O70	CHIP METAL RESISTOR	1/16W 1.2kΩ-F
R 296	103P490O10	CHIP METAL RESISTOR	1/16W 100Ω-F
R 298	103P490O10	CHIP METAL RESISTOR	1/16W 100Ω-F
R 2A0	103P490O10	CHIP METAL RESISTOR	1/16W 100Ω-F
R 2A1	103P490O10	CHIP METAL RESISTOR	1/16W 100Ω-F
R 2A2	103P490O10	CHIP METAL RESISTOR	1/16W 100Ω-F
R 2A5	103P494O10	CHIP METAL RESISTOR	1/16W 4.7kΩ-F
R 2A6	103P494O10	CHIP METAL RESISTOR	1/16W 4.7kΩ-F
R 2A7	103P490O10	CHIP METAL RESISTOR	1/16W 100Ω-F
R 2A8	103P490O10	CHIP METAL RESISTOR	1/16W 100Ω-F
R 2A9	103P497O10	CHIP METAL RESISTOR	1/16W 82kΩ-F
R 2B0	103P495O30	CHIP METAL RESISTOR	1/16W 15kΩ-F
R 2B1	103P500O90	CHIP RESISTOR	1/20W 47Ω-J
R 2B2	103P493O10	CHIP METAL RESISTOR	1/16W 1.8kΩ-F
R 2B3	103P500O90	CHIP RESISTOR	1/20W 47Ω-J
R 2B4	103P493O10	CHIP METAL RESISTOR	1/16W 1.8kΩ-F
R 2B5	103P500O90	CHIP RESISTOR	1/20W 47Ω-J
R 2C2	103P494O10	CHIP METAL RESISTOR	1/16W 4.7kΩ-F
R 2C3	103P494O90	CHIP METAL RESISTOR	1/16W 10kΩ-F
R 2C4	103P494O90	CHIP METAL RESISTOR	1/16W 10kΩ-F
R 2C5	103P494O10	CHIP METAL RESISTOR	1/16W 4.7kΩ-F
R 2C9	103P494O90	CHIP METAL RESISTOR	1/16W 10kΩ-F
R 2D0	103P494O90	CHIP METAL RESISTOR	1/16W 10kΩ-F
R 2D1	103P494O90	CHIP METAL RESISTOR	1/16W 10kΩ-F
R 2D4	103P493O20	CHIP METAL RESISTOR	1/16W 2kΩ-F
R 2D5	103P500O90	CHIP RESISTOR	1/20W 47Ω-J
R 2D6	103P493O70	CHIP METAL RESISTOR	1/16W 3.3kΩ-F
R 2D7	103P494O90	CHIP METAL RESISTOR	1/16W 10kΩ-F
R 2D8	103P494O90	CHIP METAL RESISTOR	1/16W 10kΩ-F
R 2D9	103P500O90	CHIP RESISTOR	1/20W 47Ω-J
R 2E0	103P492O50	CHIP METAL RESISTOR	1/16W 1kΩ-F
R 2E7	103P493O20	CHIP METAL RESISTOR	1/16W 2kΩ-F
R 2E8	103P490O10	CHIP METAL RESISTOR	1/16W 100Ω-F
R 2E9	103P493O70	CHIP METAL RESISTOR	1/16W 3.3kΩ-F
R 2F0	103P494O90	CHIP METAL RESISTOR	1/16W 10kΩ-F
R 2F1	103P494O90	CHIP METAL RESISTOR	1/16W 10kΩ-F
R 2F2	103P500O90	CHIP RESISTOR	1/20W 47Ω-J
R 2F3	103P492O50	CHIP METAL RESISTOR	1/16W 1kΩ-F
R 2G1	103P491O30	CHIP METAL RESISTOR	1/16W 330Ω-F
R 2H0	103P491O90	CHIP METAL RESISTOR	1/16W 560Ω-F
R 2J8	103P492O70	CHIP METAL RESISTOR	1/16W 1.2kΩ-F
R 2J9	103P492O70	CHIP METAL RESISTOR	1/16W 1.2kΩ-F
R 2K0	103P492O50	CHIP METAL RESISTOR	1/16W 1kΩ-F
R 2K1	103P492O50	CHIP METAL RESISTOR	1/16W 1kΩ-F
R 2K2	103P492O50	CHIP METAL RESISTOR	1/16W 1kΩ-F

SYMBOL No.	PARTS No.	PARTS NAME	DESCRIPTION
R 2K3	103P492O50	CHIP METAL RESISTOR	1/16W 1kΩ-F
R 2L7	103P492O50	CHIP METAL RESISTOR	1/16W 1kΩ-F
R 2L8	103P493O20	CHIP METAL RESISTOR	1/16W 2kΩ-F
R 2L9	103P493O50	CHIP METAL RESISTOR	1/16W 2.7kΩ-F
R 2M0	103P493O30	CHIP METAL RESISTOR	1/16W 2.2kΩ-F
R 2M1	103P493O90	CHIP METAL RESISTOR	1/16W 3.9kΩ-F
R 2M2	103P493O60	CHIP METAL RESISTOR	1/16W 3kΩ-F
R 2M3	103P490O50	CHIP METAL RESISTOR	1/16W 150Ω-F
R 2M4	103P495O60	CHIP METAL RESISTOR	1/16W 20kΩ-F
R 2M5	103P494O90	CHIP METAL RESISTOR	1/16W 10kΩ-F
R 2M6	103P491O50	CHIP METAL RESISTOR	1/16W 390Ω-F
R 2M7	103P493O20	CHIP METAL RESISTOR	1/16W 2kΩ-F
R 2N3	103P490O10	CHIP METAL RESISTOR	1/16W 100Ω-F
R 2N4	103P490O10	CHIP METAL RESISTOR	1/16W 100Ω-F
R 2N6	103P509O50	CHIP RESISTOR	0Ω (RM1608)
R 2N7	103P494O00	CHIP METAL RESISTOR	1/16W 4.3kΩ-F
R 2N9	103P509O50	CHIP RESISTOR	0Ω (RM1608)
R 2P1	103P494O00	CHIP METAL RESISTOR	1/16W 4.3kΩ-F
R 2P2	103P490O10	CHIP METAL RESISTOR	1/16W 100Ω-F
R 2P3	103P490O10	CHIP METAL RESISTOR	1/16W 100Ω-F
R 2P4	103P494O00	CHIP METAL RESISTOR	1/16W 4.3kΩ-F
R 2P5	103P494O00	CHIP METAL RESISTOR	1/16W 4.3kΩ-F
R 2R0	103P492O40	CHIP RESISTOR	1/16W 910Ω-F
R 2R1	103P492O40	CHIP RESISTOR	1/16W 910Ω-F
R 2R2	103P492O40	CHIP RESISTOR	1/16W 910Ω-F
R 2R3	103P492O40	CHIP RESISTOR	1/16W 910Ω-F
R 2T1	103P490O10	CHIP METAL RESISTOR	1/16W 100Ω-F
R 2T2	103P490O10	CHIP METAL RESISTOR	1/16W 100Ω-F
R 2T3	103P490O10	CHIP METAL RESISTOR	1/16W 100Ω-F
R 2T4	103P492O10	CHIP METAL RESISTOR	1/16W 680Ω-F
R 2T5	103P492O10	CHIP METAL RESISTOR	1/16W 680Ω-F
R 2T6	103P492O10	CHIP METAL RESISTOR	1/16W 680Ω-F
R 2T7	103P500O80	CHIP RESISTOR	1/16W 39Ω-J
R 2T8	103P500O80	CHIP RESISTOR	1/16W 39Ω-J
R 2T9	103P500O80	CHIP RESISTOR	1/16W 39Ω-J
R 2W1	103P490O10	CHIP METAL RESISTOR	1/16W 100Ω-F
R 2W2	103P490O10	CHIP METAL RESISTOR	1/16W 100Ω-F
R 2W3	103P490O10	CHIP METAL RESISTOR	1/16W 100Ω-F
R 2W4	103P492O10	CHIP METAL RESISTOR	1/16W 680Ω-F
R 2W5	103P492O10	CHIP METAL RESISTOR	1/16W 680Ω-F
R 2W6	103P492O10	CHIP METAL RESISTOR	1/16W 680Ω-F
R 2W7	103P500O80	CHIP RESISTOR	1/16W 39Ω-J
R 2W8	103P500O80	CHIP RESISTOR	1/16W 39Ω-J
R 2W9	103P500O80	CHIP RESISTOR	1/16W 39Ω-J
R 300	103P509O50	CHIP RESISTOR	0Ω (RM1608)
R 302	103P497O30	CHIP METAL RESISTOR	1/16W 100kΩ-F
R 303	103P497O30	CHIP METAL RESISTOR	1/16W 100kΩ-F
R 304	103P509O50	CHIP RESISTOR	0Ω (RM1608)
R 306	103P497O30	CHIP METAL RESISTOR	1/16W 100kΩ-F
R 307	103P497O30	CHIP METAL RESISTOR	1/16W 100kΩ-F
R 308	103P509O50	CHIP RESISTOR	0Ω (RM1608)
R 310	103P497O30	CHIP METAL RESISTOR	1/16W 100kΩ-F
R 311	103P497O30	CHIP METAL RESISTOR	1/16W 100kΩ-F
R 312	103P509O50	CHIP RESISTOR	0Ω (RM1608)
R 314	103P497O30	CHIP METAL RESISTOR	1/16W 100kΩ-F
R 315	103P497O30	CHIP METAL RESISTOR	1/16W 100kΩ-F
R 316	103P493O30	CHIP METAL RESISTOR	1/16W 2.2kΩ-F

COMMON USE

SYMBOL No.	PARTS No.	PARTS NAME	DESCRIPTION
R 317	103P498O50	CHIP METAL RESISTOR	1/16W 330kΩ-F
R 318	103P497O30	CHIP METAL RESISTOR	1/16W 100kΩ-F
R 319	103P497O30	CHIP METAL RESISTOR	1/16W 100kΩ-F
R 320	103P493O30	CHIP METAL RESISTOR	1/16W 2.2kΩ-F
R 321	103P498O50	CHIP METAL RESISTOR	1/16W 330kΩ-F
R 322	103P497O30	CHIP METAL RESISTOR	1/16W 100kΩ-F
R 323	103P497O30	CHIP METAL RESISTOR	1/16W 100kΩ-F
R 325	103P494O10	CHIP METAL RESISTOR	1/16W 4.7kΩ-F
R 326	103P494O10	CHIP METAL RESISTOR	1/16W 4.7kΩ-F
R 327	103P490O10	CHIP METAL RESISTOR	1/16W 100Ω-F
R 328	103P492O50	CHIP METAL RESISTOR	1/16W 1kΩ-F
R 329	103P491O30	CHIP METAL RESISTOR	1/16W 330Ω-F
R 330	103P481O90	CHIP METAL RESISTOR	1/4W 330Ω-J
R 331	103P490O10	CHIP METAL RESISTOR	1/16W 100Ω-F
R 332	103P492O50	CHIP METAL RESISTOR	1/16W 1kΩ-F
R 333	103P491O30	CHIP METAL RESISTOR	1/16W 330Ω-F
R 334	103P481O90	CHIP METAL RESISTOR	1/4W 330Ω-J
R 335	103P494O10	CHIP METAL RESISTOR	1/16W 4.7kΩ-F
R 336	103P496O50	CHIP METAL RESISTOR	1/16W 47kΩ-F
R 337	103P494O10	CHIP METAL RESISTOR	1/16W 4.7kΩ-F
R 338	103P496O50	CHIP METAL RESISTOR	1/16W 47kΩ-F
R 350	103P494O90	CHIP METAL RESISTOR	1/16W 10kΩ-F
R 351	103P494O10	CHIP METAL RESISTOR	1/16W 4.7kΩ-F
R 352	103P494O10	CHIP METAL RESISTOR	1/16W 4.7kΩ-F
R 353	103P494O90	CHIP METAL RESISTOR	1/16W 10kΩ-F
R 354	103P494O90	CHIP METAL RESISTOR	1/16W 10kΩ-F
R 355	103P495O70	CHIP METAL RESISTOR	1/16W 22kΩ-F
R 356	103P495O70	CHIP METAL RESISTOR	1/16W 22kΩ-F
R 357	103P495O70	CHIP METAL RESISTOR	1/16W 22kΩ-F
R 358	103P495O70	CHIP METAL RESISTOR	1/16W 22kΩ-F
R 360	103P494O10	CHIP METAL RESISTOR	1/16W 4.7kΩ-F
R 361	103P494O10	CHIP METAL RESISTOR	1/16W 4.7kΩ-F
R 362	103P490O10	CHIP METAL RESISTOR	1/16W 100Ω-F
R 363	103P491O30	CHIP METAL RESISTOR	1/16W 330Ω-F
R 364	103P492O50	CHIP METAL RESISTOR	1/16W 1kΩ-F
R 365	103P494O10	CHIP METAL RESISTOR	1/16W 4.7kΩ-F
R 366	103P496O50	CHIP METAL RESISTOR	1/16W 47kΩ-F
R 367	103P490O10	CHIP METAL RESISTOR	1/16W 100Ω-F
R 368	103P491O30	CHIP METAL RESISTOR	1/16W 330Ω-F
R 369	103P492O50	CHIP METAL RESISTOR	1/16W 1kΩ-F
R 370	103P494O10	CHIP METAL RESISTOR	1/16W 4.7kΩ-F
R 371	103P496O50	CHIP METAL RESISTOR	1/16W 47kΩ-F
R 380	103P491O10	CHIP METAL RESISTOR	1/16W 270Ω-F
R 381	103P494O90	CHIP METAL RESISTOR	1/16W 10kΩ-F
R 382	103P488O80	CHIP METAL RESISTOR	1/4W 4.7Ω-K
R 383	103P491O10	CHIP METAL RESISTOR	1/16W 270Ω-F
R 384	103P494O90	CHIP METAL RESISTOR	1/16W 10kΩ-F
R 385	103P488O80	CHIP METAL RESISTOR	1/4W 4.7Ω-K
R 386	103P494O90	CHIP METAL RESISTOR	1/16W 10kΩ-F
R 387	103P494O90	CHIP METAL RESISTOR	1/16W 10kΩ-F
R 407	103P500O90	CHIP RESISTOR	1/20W 47Ω-J
R 409	103P500O50	CHIP RESISTOR	1/16W 22Ω-J
R 410	103P500O50	CHIP RESISTOR	1/16W 22Ω-J
R 411	103P500O50	CHIP RESISTOR	1/16W 22Ω-J
R 414	103P500O50	CHIP RESISTOR	1/16W 22Ω-J
R 415	103P500O50	CHIP RESISTOR	1/16W 22Ω-J

SYMBOL No.	PARTS No.	PARTS NAME	DESCRIPTION
R 422	103P500O50	CHIP RESISTOR	1/16W 22Ω-J
R 423	103P500O50	CHIP RESISTOR	1/16W 22Ω-J
R 429	103P500O10	CHIP RESISTOR	1/16W 10Ω-J
R 440	103P500O50	CHIP RESISTOR	1/16W 22Ω-J
R 441	103P500O50	CHIP RESISTOR	1/16W 22Ω-J
R 442	103P500O50	CHIP RESISTOR	1/16W 22Ω-J
R 447	103P500O50	CHIP RESISTOR	1/16W 22Ω-J
R 450	103P500O50	CHIP RESISTOR	1/16W 22Ω-J
R 451	103P500O50	CHIP RESISTOR	1/16W 22Ω-J
R 452	103P500O50	CHIP RESISTOR	1/16W 22Ω-J
R 460	103P500O50	CHIP RESISTOR	1/16W 22Ω-J
R 461	103P500O50	CHIP RESISTOR	1/16W 22Ω-J
R 462	103P500O50	CHIP RESISTOR	1/16W 22Ω-J
R 467	103P500O50	CHIP RESISTOR	1/16W 22Ω-J
R 468	103P490O10	CHIP METAL RESISTOR	1/16W 100Ω-F
R 469	103P500O90	CHIP RESISTOR	1/20W 47Ω-J
R 470	103P500O50	CHIP RESISTOR	1/16W 22Ω-J
R 471	103P500O50	CHIP RESISTOR	1/16W 22Ω-J
R 472	103P500O50	CHIP RESISTOR	1/16W 22Ω-J
R 473	103P500O50	CHIP RESISTOR	1/16W 22Ω-J
R 483	103P500O50	CHIP RESISTOR	1/16W 22Ω-J
R 488	103P500O50	CHIP RESISTOR	1/16W 22Ω-J
R 493	103P500O50	CHIP RESISTOR	1/16W 22Ω-J
R 499	103P500O50	CHIP RESISTOR	1/16W 22Ω-J
R 4M0	103P500O50	CHIP RESISTOR	1/16W 22Ω-J
R 4M1	103P500O50	CHIP RESISTOR	1/16W 22Ω-J
R 4M3	103P509O50	CHIP RESISTOR	0Ω (RM1608)
R 4M4	103P500O10	CHIP RESISTOR	1/16W 10Ω-J
R 4M5	103P500O10	CHIP RESISTOR	1/16W 10Ω-J
R 4M9	103P509O50	CHIP RESISTOR	0Ω (RM1608)
R 4P2	103P500O10	CHIP RESISTOR	1/16W 10Ω-J
R 4P3	103P500O50	CHIP RESISTOR	1/16W 22Ω-J
R 4P4	103P509O50	CHIP RESISTOR	0Ω (RM1608)
R 4P5	103P509O50	CHIP RESISTOR	0Ω (RM1608)
R 4P6	103P509O50	CHIP RESISTOR	0Ω (RM1608)
R 4S0	103P500O90	CHIP RESISTOR	1/20W 47Ω-J
R 4S1	103P500O90	CHIP RESISTOR	1/20W 47Ω-J
R 4S2	103P494O10	CHIP METAL RESISTOR	1/16W 4.7kΩ-F
R 4S4	103P500O10	CHIP RESISTOR	1/16W 10Ω-J
R 4S5	103P509O50	CHIP RESISTOR	0Ω (RM1608)
R 4S6	103P509O50	CHIP RESISTOR	0Ω (RM1608)
R 4S7	103P509O50	CHIP RESISTOR	0Ω (RM1608)
R 4S8	103P509O50	CHIP RESISTOR	0Ω (RM1608)
R 4U0	103P509O50	CHIP RESISTOR	0Ω (RM1608)
R 4U1	103P509O50	CHIP RESISTOR	0Ω (RM1608)
R 4U2	103P509O50	CHIP RESISTOR	0Ω (RM1608)
R 4U3	103P509O50	CHIP RESISTOR	0Ω (RM1608)
R 4U4	103P509O50	CHIP RESISTOR	0Ω (RM1608)
R 4U5	103P509O50	CHIP RESISTOR	0Ω (RM1608)
R 4X1	103P500O50	CHIP RESISTOR	1/16W 22Ω-J
R 4Y2	103P500O10	CHIP RESISTOR	1/16W 10Ω-J
R 4Y9	103P500O10	CHIP RESISTOR	1/16W 10Ω-J
R 4Z0	103P500O10	CHIP RESISTOR	1/16W 10Ω-J
R 4Z1	103P500O10	CHIP RESISTOR	1/16W 10Ω-J
R 4Z2	103P500O10	CHIP RESISTOR	1/16W 10Ω-J
R 4Z4	103P500O50	CHIP RESISTOR	1/16W 22Ω-J
R 4Z8	103P509O50	CHIP RESISTOR	0Ω (RM1608)

COMMON USE

SYMBOL No.	PARTS No.	PARTS NAME	DESCRIPTION
R 501	103P500O10	CHIP RESISTOR	1/16W 10Ω-J
R 502	103P500O10	CHIP RESISTOR	1/16W 10Ω-J
R 505	103P493O00	CHIP METAL RESISTOR	1/16W 1.6kΩ-F
R 506	103P493O70	CHIP METAL RESISTOR	1/16W 3.3kΩ-F
R 507	103P497O30	CHIP METAL RESISTOR	1/16W 100kΩ-F
R 508	103P490O10	CHIP METAL RESISTOR	1/16W 100Ω-F
R 509	103P481O90	CHIP METAL RESISTOR	1/4W 330Ω-J
R 510	103P481O90	CHIP METAL RESISTOR	1/4W 330Ω-J
R 511	103P481O90	CHIP METAL RESISTOR	1/4W 330Ω-J
R 512	103P481O90	CHIP METAL RESISTOR	1/4W 330Ω-J
R 514	103P494O90	CHIP METAL RESISTOR	1/16W 10kΩ-F
R 515	103P490O10	CHIP METAL RESISTOR	1/16W 100Ω-F
R 516	103P490O10	CHIP METAL RESISTOR	1/16W 100Ω-F
R 520	103P491O70	CHIP METAL RESISTOR	1/16W 470Ω-F
R 521	103P493O30	CHIP METAL RESISTOR	1/16W 2.2kΩ-F
R 522	103P497O30	CHIP METAL RESISTOR	1/16W 100kΩ-F
R 525	103P493O70	CHIP METAL RESISTOR	1/16W 3.3kΩ-F
R 526	103P493O70	CHIP METAL RESISTOR	1/16W 3.3kΩ-F
R 527	103P493O90	CHIP METAL RESISTOR	1/16W 3.9kΩ-F
R 528	103P495O30	CHIP METAL RESISTOR	1/16W 15kΩ-F
R 531	103P492O70	CHIP METAL RESISTOR	1/16W 1.2kΩ-F
R 532	103P492O70	CHIP METAL RESISTOR	1/16W 1.2kΩ-F
R 533	103P492O70	CHIP METAL RESISTOR	1/16W 1.2kΩ-F
R 536	103P493O30	CHIP METAL RESISTOR	1/16W 2.2kΩ-F
R 540	103P493O50	CHIP METAL RESISTOR	1/16W 2.7kΩ-F
R 541	103P492O70	CHIP METAL RESISTOR	1/16W 1.2kΩ-F
R 542	103P493O50	CHIP METAL RESISTOR	1/16W 2.7kΩ-F
R 543	103P492O70	CHIP METAL RESISTOR	1/16W 1.2kΩ-F
R 550	103P509O50	CHIP RESISTOR	0Ω (RM1608)
R 553	103P490O90	CHIP METAL RESISTOR	1/16W 220Ω-F
R 561	103P509O50	CHIP RESISTOR	0Ω (RM1608)
R 565	103P509O50	CHIP RESISTOR	0Ω (RM1608)
R 570	103P490O10	CHIP METAL RESISTOR	1/16W 100Ω-F
R 571	103P490O10	CHIP METAL RESISTOR	1/16W 100Ω-F
R 572	103P490O10	CHIP METAL RESISTOR	1/16W 100Ω-F
R 573	103P500O90	CHIP RESISTOR	1/20W 47Ω-J
R 574	103P490O10	CHIP METAL RESISTOR	1/16W 100Ω-F
R 575	103P500O90	CHIP RESISTOR	1/20W 47Ω-J
R 581	103P509O50	CHIP RESISTOR	0Ω (RM1608)
R 582	103P509O50	CHIP RESISTOR	0Ω (RM1608)
R 583	103P509O50	CHIP RESISTOR	0Ω (RM1608)
R 591	103P509O50	CHIP RESISTOR	0Ω (RM1608)
R 592	103P509O50	CHIP RESISTOR	0Ω (RM1608)
R 593	103P509O50	CHIP RESISTOR	0Ω (RM1608)
R 5A0	103P500O90	CHIP RESISTOR	1/20W 47Ω-J
R 5A1	103P497O30	CHIP METAL RESISTOR	1/16W 100kΩ-F
R 5A2	103P500O90	CHIP RESISTOR	1/20W 47Ω-J
R 5A3	103P500O90	CHIP RESISTOR	1/20W 47Ω-J
R 5A4	103P497O30	CHIP METAL RESISTOR	1/16W 100kΩ-F
R 5A5	103P500O90	CHIP RESISTOR	1/20W 47Ω-J
R 5A6	103P500O90	CHIP RESISTOR	1/20W 47Ω-J
R 5A7	103P497O30	CHIP METAL RESISTOR	1/16W 100kΩ-F
R 5A8	103P500O90	CHIP RESISTOR	1/20W 47Ω-J
R 5A9	103P500O90	CHIP RESISTOR	1/20W 47Ω-J
R 5B0	103P497O30	CHIP METAL RESISTOR	1/16W 100kΩ-F
R 5B1	103P500O90	CHIP RESISTOR	1/20W 47Ω-J
R 5B2	103P500O90	CHIP RESISTOR	1/20W 47Ω-J
R 5B3	103P500O90	CHIP RESISTOR	1/20W 47Ω-J
R 5B4	103P500O90	CHIP RESISTOR	1/20W 47Ω-J
R 5B5	103P497O30	CHIP METAL RESISTOR	1/16W 100kΩ-F
R 5B6	103P500O90	CHIP RESISTOR	1/20W 47Ω-J
R 5B7	103P500O90	CHIP RESISTOR	1/20W 47Ω-J
R 5B8	103P500O90	CHIP RESISTOR	1/20W 47Ω-J
R 5B9	103P500O90	CHIP RESISTOR	1/20W 47Ω-J
R 5C0	103P500O90	CHIP RESISTOR	1/20W 47Ω-J
R 5C1	103P494O10	CHIP METAL RESISTOR	1/16W 4.7kΩ-F
R 5C2	103P494O10	CHIP METAL RESISTOR	1/16W 4.7kΩ-F
R 5C3	103P494O50	CHIP METAL RESISTOR	1/16W 6.8kΩ-F
R 5C4	103P494O10	CHIP METAL RESISTOR	1/16W 4.7kΩ-F
R 5C5	103P494O10	CHIP METAL RESISTOR	1/16W 4.7kΩ-F
R 5C6	103P494O50	CHIP METAL RESISTOR	1/16W 6.8kΩ-F
R 5C7	103P494O10	CHIP METAL RESISTOR	1/16W 4.7kΩ-F
R 5C8	103P494O10	CHIP METAL RESISTOR	1/16W 4.7kΩ-F
R 5C9	103P494O50	CHIP METAL RESISTOR	1/16W 6.8kΩ-F
R 5D0	103P494O10	CHIP METAL RESISTOR	1/16W 4.7kΩ-F
R 5D1	103P494O10	CHIP METAL RESISTOR	1/16W 4.7kΩ-F
R 5D2	103P494O50	CHIP METAL RESISTOR	1/16W 6.8kΩ-F
R 5D3	103P494O10	CHIP METAL RESISTOR	1/16W 4.7kΩ-F
R 5D4	103P494O10	CHIP METAL RESISTOR	1/16W 4.7kΩ-F
R 5D5	103P494O50	CHIP METAL RESISTOR	1/16W 6.8kΩ-F
R 5F0	103P500O90	CHIP RESISTOR	1/20W 47Ω-J
R 5F1	103P497O30	CHIP METAL RESISTOR	1/16W 100kΩ-F
R 5F2	103P500O90	CHIP RESISTOR	1/20W 47Ω-J
R 5F3	103P500O90	CHIP RESISTOR	1/20W 47Ω-J
R 5F4	103P497O30	CHIP METAL RESISTOR	1/16W 100kΩ-F
R 5F5	103P500O90	CHIP RESISTOR	1/20W 47Ω-J
R 5F6	103P500O90	CHIP RESISTOR	1/20W 47Ω-J
R 5F7	103P497O30	CHIP METAL RESISTOR	1/16W 100kΩ-F
R 5F8	103P500O90	CHIP RESISTOR	1/20W 47Ω-J
R 5F9	103P500O90	CHIP RESISTOR	1/20W 47Ω-J
R 5G0	103P497O30	CHIP METAL RESISTOR	1/16W 100kΩ-F
R 5G1	103P500O90	CHIP RESISTOR	1/20W 47Ω-J
R 5G2	103P500O90	CHIP RESISTOR	1/20W 47Ω-J
R 5G3	103P500O90	CHIP RESISTOR	1/20W 47Ω-J
R 5G4	103P500O90	CHIP RESISTOR	1/20W 47Ω-J
R 5G5	103P497O30	CHIP METAL RESISTOR	1/16W 100kΩ-F
R 5G6	103P500O90	CHIP RESISTOR	1/20W 47Ω-J
R 5G7	103P500O90	CHIP RESISTOR	1/20W 47Ω-J
R 5G8	103P500O90	CHIP RESISTOR	1/20W 47Ω-J
R 5G9	103P500O90	CHIP RESISTOR	1/20W 47Ω-J
R 5H0	103P500O90	CHIP RESISTOR	1/20W 47Ω-J
R 5H1	103P494O10	CHIP METAL RESISTOR	1/16W 4.7kΩ-F
R 5H2	103P494O10	CHIP METAL RESISTOR	1/16W 4.7kΩ-F
R 5H3	103P494O50	CHIP METAL RESISTOR	1/16W 6.8kΩ-F
R 5H4	103P494O10	CHIP METAL RESISTOR	1/16W 4.7kΩ-F
R 5H5	103P494O10	CHIP METAL RESISTOR	1/16W 4.7kΩ-F
R 5H6	103P494O50	CHIP METAL RESISTOR	1/16W 6.8kΩ-F
R 5H7	103P494O10	CHIP METAL RESISTOR	1/16W 4.7kΩ-F
R 5H8	103P494O10	CHIP METAL RESISTOR	1/16W 4.7kΩ-F
R 5H9	103P494O50	CHIP METAL RESISTOR	1/16W 6.8kΩ-F
R 5J0	103P494O10	CHIP METAL RESISTOR	1/16W 4.7kΩ-F
R 5J1	103P494O10	CHIP METAL RESISTOR	1/16W 4.7kΩ-F
R 5J2	103P494O50	CHIP METAL RESISTOR	1/16W 6.8kΩ-F

SYMBOL No.	PARTS No.	PARTS NAME	DESCRIPTION
R 5J3	103P494O10	CHIP METAL RESISTOR	1/16W 4.7kΩ-F
R 5J4	103P494O10	CHIP METAL RESISTOR	1/16W 4.7kΩ-F
R 5J5	103P494O50	CHIP METAL RESISTOR	1/16W 6.8kΩ-F
R 5L0	103P500O90	CHIP RESISTOR	1/20W 47Ω-J
R 5L1	103P497O30	CHIP METAL RESISTOR	1/16W 100kΩ-F
R 5L2	103P500O90	CHIP RESISTOR	1/20W 47Ω-J
R 5L3	103P500O90	CHIP RESISTOR	1/20W 47Ω-J
R 5L4	103P497O30	CHIP METAL RESISTOR	1/16W 100kΩ-F
R 5L5	103P500O90	CHIP RESISTOR	1/20W 47Ω-J
R 5L6	103P500O90	CHIP RESISTOR	1/20W 47Ω-J
R 5L7	103P497O30	CHIP METAL RESISTOR	1/16W 100kΩ-F
R 5L8	103P500O90	CHIP RESISTOR	1/20W 47Ω-J
R 5L9	103P500O90	CHIP RESISTOR	1/20W 47Ω-J
R 5M0	103P497O30	CHIP METAL RESISTOR	1/16W 100kΩ-F
R 5M1	103P500O90	CHIP RESISTOR	1/20W 47Ω-J
R 5M2	103P500O90	CHIP RESISTOR	1/20W 47Ω-J
R 5M3	103P500O90	CHIP RESISTOR	1/20W 47Ω-J
R 5M4	103P500O90	CHIP RESISTOR	1/20W 47Ω-J
R 5M5	103P497O30	CHIP METAL RESISTOR	1/16W 100kΩ-F
R 5M6	103P500O90	CHIP RESISTOR	1/20W 47Ω-J
R 5M7	103P500O90	CHIP RESISTOR	1/20W 47Ω-J
R 5M8	103P500O90	CHIP RESISTOR	1/20W 47Ω-J
R 5M9	103P500O90	CHIP RESISTOR	1/20W 47Ω-J
R 5N0	103P500O90	CHIP RESISTOR	1/20W 47Ω-J
R 5N1	103P494O10	CHIP METAL RESISTOR	1/16W 4.7kΩ-F
R 5N2	103P494O10	CHIP METAL RESISTOR	1/16W 4.7kΩ-F
R 5N3	103P494O50	CHIP METAL RESISTOR	1/16W 6.8kΩ-F
R 5N4	103P494O10	CHIP METAL RESISTOR	1/16W 4.7kΩ-F
R 5N5	103P494O10	CHIP METAL RESISTOR	1/16W 4.7kΩ-F
R 5N6	103P494O50	CHIP METAL RESISTOR	1/16W 6.8kΩ-F
R 5N7	103P494O10	CHIP METAL RESISTOR	1/16W 4.7kΩ-F
R 5N8	103P494O10	CHIP METAL RESISTOR	1/16W 4.7kΩ-F
R 5N9	103P494O50	CHIP METAL RESISTOR	1/16W 6.8kΩ-F
R 5P0	103P494O10	CHIP METAL RESISTOR	1/16W 4.7kΩ-F
R 5P1	103P494O10	CHIP METAL RESISTOR	1/16W 4.7kΩ-F
R 5P2	103P494O50	CHIP METAL RESISTOR	1/16W 6.8kΩ-F
R 5P3	103P494O10	CHIP METAL RESISTOR	1/16W 4.7kΩ-F
R 5P4	103P494O10	CHIP METAL RESISTOR	1/16W 4.7kΩ-F
R 5P5	103P494O50	CHIP METAL RESISTOR	1/16W 6.8kΩ-F
R 5R0	103P494O10	CHIP METAL RESISTOR	1/16W 4.7kΩ-F
R 5R1	103P494O10	CHIP METAL RESISTOR	1/16W 4.7kΩ-F
R 5R4	103P481O40	CHIP METAL RESISTOR	1/4W 120Ω-J
R 5R5	103P481O40	CHIP METAL RESISTOR	1/4W 120Ω-J
R 5R6	103P494O00	CHIP METAL RESISTOR	1/16W 4.3kΩ-F
R 5R7	103P494O10	CHIP METAL RESISTOR	1/16W 4.7kΩ-F
R 5R8	103P493O10	CHIP METAL RESISTOR	1/16W 1.8kΩ-F
R 5R9	103P492O30	CHIP METAL RESISTOR	1/16W 820Ω-F
R 5S0	103P492O40	CHIP RESISTOR	1/16W 910Ω-F
R 5S1	103P493O10	CHIP METAL RESISTOR	1/16W 1.8kΩ-F
R 5S2	103P492O30	CHIP METAL RESISTOR	1/16W 820Ω-F
R 5S3	103P492O40	CHIP RESISTOR	1/16W 910Ω-F
R 5S4	103P493O10	CHIP METAL RESISTOR	1/16W 1.8kΩ-F
R 5S5	103P492O30	CHIP METAL RESISTOR	1/16W 820Ω-F
R 5S6	103P492O40	CHIP RESISTOR	1/16W 910Ω-F
R 5S7	103P493O70	CHIP METAL RESISTOR	1/16W 3.3kΩ-F
R 5S8	103P492O10	CHIP METAL RESISTOR	1/16W 680Ω-F
R 5S9	103P492O60	CHIP METAL RESISTOR	1/16W 1.1kΩ-F

SYMBOL No.	PARTS No.	PARTS NAME	DESCRIPTION
R 5T0	103P493O70	CHIP METAL RESISTOR	1/16W 3.3kΩ-F
R 5T1	103P492O10	CHIP METAL RESISTOR	1/16W 680Ω-F
R 5T2	103P492O60	CHIP METAL RESISTOR	1/16W 1.1kΩ-F
R 5T3	103P493O70	CHIP METAL RESISTOR	1/16W 3.3kΩ-F
R 5T4	103P492O10	CHIP METAL RESISTOR	1/16W 680Ω-F
R 5T5	103P492O60	CHIP METAL RESISTOR	1/16W 1.1kΩ-F
R 5V4	103P494O10	CHIP METAL RESISTOR	1/16W 4.7kΩ-F
R 5V5	103P494O10	CHIP METAL RESISTOR	1/16W 4.7kΩ-F
R 5V6	103P494O10	CHIP METAL RESISTOR	1/16W 4.7kΩ-F
R 5V7	103P493O80	CHIP METAL RESISTOR	1/16W 3.6kΩ-F
R 5V8	103P493O10	CHIP METAL RESISTOR	1/16W 1.8kΩ-F
R 5V9	103P496O50	CHIP METAL RESISTOR	1/16W 47kΩ-F
R 5W0	103P495O70	CHIP METAL RESISTOR	1/16W 22kΩ-F
R 5W1	103P495O30	CHIP METAL RESISTOR	1/16W 15kΩ-F
R 5W2	103P496O50	CHIP METAL RESISTOR	1/16W 47kΩ-F
R 5W3	103P495O70	CHIP METAL RESISTOR	1/16W 22kΩ-F
R 5W4	103P495O30	CHIP METAL RESISTOR	1/16W 15kΩ-F
R 5W5	103P496O50	CHIP METAL RESISTOR	1/16W 47kΩ-F
R 5W6	103P495O70	CHIP METAL RESISTOR	1/16W 22kΩ-F
R 5W7	103P495O30	CHIP METAL RESISTOR	1/16W 15kΩ-F
R 5W8	103P492O50	CHIP METAL RESISTOR	1/16W 1kΩ-F
R 5W9	103P494O20	CHIP METAL RESISTOR	1/16W 5.1kΩ-F
R 5X0	103P492O50	CHIP METAL RESISTOR	1/16W 1kΩ-F
R 5X7	103P494O90	CHIP METAL RESISTOR	1/16W 10kΩ-F
R 600	103P494O10	CHIP METAL RESISTOR	1/16W 4.7kΩ-F
R 602	103P495O10	CHIP METAL RESISTOR	1/16W 12kΩ-F
R 604	103P494O90	CHIP METAL RESISTOR	1/16W 10kΩ-F
R 605	103P490O80	CHIP METAL RESISTOR	1/16W 200Ω-F
R 606	103P500O90	CHIP RESISTOR	1/20W 47Ω-J
R 607	103P482O10	CHIP METAL RESISTOR	1/4W 470Ω-J
R 608	103P490O10	CHIP METAL RESISTOR	1/16W 100Ω-F
R 609	103P481O40	CHIP METAL RESISTOR	1/4W 120Ω-J
R 610	103P500O10	CHIP RESISTOR	1/16W 10Ω-J
R 611	103P494O90	CHIP METAL RESISTOR	1/16W 10kΩ-F
R 612	103P490O10	CHIP METAL RESISTOR	1/16W 100Ω-F
R 613	103P494O10	CHIP METAL RESISTOR	1/16W 4.7kΩ-F
R 615	103P495O10	CHIP METAL RESISTOR	1/16W 12kΩ-F
R 617	103P494O90	CHIP METAL RESISTOR	1/16W 10kΩ-F
R 618	103P490O80	CHIP METAL RESISTOR	1/16W 200Ω-F
R 619	103P500O90	CHIP RESISTOR	1/20W 47Ω-J
R 620	103P482O10	CHIP METAL RESISTOR	1/4W 470Ω-J
R 621	103P490O10	CHIP METAL RESISTOR	1/16W 100W-F
R 622	103P481O40	CHIP METAL RESISTOR	1/4W 120Ω-J
R 623	103P500O10	CHIP RESISTOR	1/16W 10Ω-J
R 624	103P494O90	CHIP METAL RESISTOR	1/16W 10kΩ-F
R 625	103P490O10	CHIP METAL RESISTOR	1/16W 100Ω-F
R 626	103P494O10	CHIP METAL RESISTOR	1/16W 4.7kΩ-F
R 628	103P495O10	CHIP METAL RESISTOR	1/16W 12kΩ-F
R 630	103P494O90	CHIP METAL RESISTOR	1/16W 10kΩ-F
R 631	103P490O80	CHIP METAL RESISTOR	1/16W 200Ω-F
R 632	103P500O90	CHIP RESISTOR	1/20W 47Ω-J
R 633	103P482O10	CHIP METAL RESISTOR	1/4W 470Ω-J
R 634	103P490O10	CHIP METAL RESISTOR	1/16W 100Ω-F
R 635	103P481O40	CHIP METAL RESISTOR	1/4W 120Ω-J
R 636	103P500O10	CHIP RESISTOR	1/16W 10Ω-J
R 637	103P494O90	CHIP METAL RESISTOR	1/16W 10kΩ-F
R 638	103P490O10	CHIP METAL RESISTOR	1/16W 100Ω-F

COMMON USE

SYMBOL No.	PARTS No.	PARTS NAME	DESCRIPTION
R 650	103P481O50	CHIP METAL RESISTOR	1/4W 150Ω-J
R 651	103P481O50	CHIP METAL RESISTOR	1/4W 150Ω-J
R 652	103P494O00	CHIP METAL RESISTOR	1/16W4.3kΩ-F
R 653	103P494O10	CHIP METAL RESISTOR	1/16W 4.7kΩ-F
R 654	103P492O30	CHIP METAL RESISTOR	1/16W 820Ω-F
R 655	103P492O50	CHIP METAL RESISTOR	1/16W 1kΩ-F
R 656	103P492O30	CHIP METAL RESISTOR	1/16W 820Ω-F
R 657	103P490O70	CHIP METAL RESISTOR	1/16W 180Ω-F
R 658	103P493O20	CHIP METAL RESISTOR	1/16W 2kΩ-F
R 659	103P493O70	CHIP METAL RESISTOR	1/16W 3.3kΩ-F
R 660	103P493O70	CHIP METAL RESISTOR	1/16W 3.3kΩ-F
R 661	103P496O90	CHIP METAL RESISTOR	1/6W 68kΩ-F
R 662	103P496O90	CHIP METAL RESISTOR	1/6W 68kΩ-F
R 663	103P494O10	CHIP METAL RESISTOR	1/16W 4.7kΩ-F
R 664	103P494O10	CHIP METAL RESISTOR	1/16W 4.7kΩ-F
R 665	103P490O10	CHIP METAL RESISTOR	1/16W 100Ω-F
R 666	103P490O10	CHIP METAL RESISTOR	1/16W 100Ω-F
R 667	103P496O90	CHIP METAL RESISTOR	1/6W 68kΩ-F
R 668	103P496O90	CHIP METAL RESISTOR	1/6W 68kΩ-F
R 669	103P494O00	CHIP METAL RESISTOR	1/16W 4.3kΩ-F
R 670	103P494O10	CHIP METAL RESISTOR	1/16W 4.7kΩ-F
R 671	103P494O00	CHIP METAL RESISTOR	1/16W 4.3kΩ-F
R 672	103P494O10	CHIP METAL RESISTOR	1/16W 4.7kΩ-F
R 678	103P494O00	CHIP METAL RESISTOR	1/16W 4.3kΩ-F
R 679	103P494O10	CHIP METAL RESISTOR	1/16W 4.7kΩ-F
R 680	103P496O90	CHIP METAL RESISTOR	1/6W 68kΩ-F
R 681	103P490O10	CHIP METAL RESISTOR	1/16W 100Ω-F
R 682	103P490O10	CHIP METAL RESISTOR	1/16W 100Ω-F
R 683	103P490O10	CHIP METAL RESISTOR	1/16W 100Ω-F
R 684	103P490O10	CHIP METAL RESISTOR	1/16W 100Ω-F
R 685	103P490O10	CHIP METAL RESISTOR	1/16W 100Ω-F
R 6A5	103P509O50	CHIP RESISTOR	0Ω (RM1608)
R 6B4	103P509O50	CHIP RESISTOR	0Ω (RM1608)
R 6B9	103P509O50	CHIP RESISTOR	0Ω (RM1608)
R 700	103P494O90	CHIP METAL RESISTOR	1/16W 10kΩ-F
R 701	103P494O90	CHIP METAL RESISTOR	1/16W 10kΩ-F
R 702	103P492O50	CHIP METAL RESISTOR	1/16W 1kΩ-F
R 703	103P493O70	CHIP METAL RESISTOR	1/16W 3.3kΩ-F
R 704	103P492O50	CHIP METAL RESISTOR	1/16W 1kΩ-F
R 705	103P493O70	CHIP METAL RESISTOR	1/16W 3.3kΩ-F
R 706	103P492O50	CHIP METAL RESISTOR	1/16W 1kΩ-F
R 707	103P493O70	CHIP METAL RESISTOR	1/16W 3.3kΩ-F
R 708	103P494O90	CHIP METAL RESISTOR	1/16W 10kΩ-F
R 709	103P490O10	CHIP METAL RESISTOR	1/16W 100Ω-F
R 710	103P494O90	CHIP METAL RESISTOR	1/16W 10kΩ-F
R 713	103P494O10	CHIP METAL RESISTOR	1/16W 4.7kΩ-F
R 714	103P494O10	CHIP METAL RESISTOR	1/16W 4.7kΩ-F
R 719	103P490O90	CHIP METAL RESISTOR	1/16W 220Ω-F
R 720	103P491O50	CHIP METAL RESISTOR	1/16W 390Ω-F
R 721	103P491O50	CHIP METAL RESISTOR	1/16W 390Ω-F
R 722	103P491O50	CHIP METAL RESISTOR	1/16W 390Ω-F
R 723	103P491O50	CHIP METAL RESISTOR	1/16W 390Ω-F
R 724	103P491O50	CHIP METAL RESISTOR	1/16W 390Ω-F
R 725	103P491O50	CHIP METAL RESISTOR	1/16W 390Ω-F
R 726	103P491O50	CHIP METAL RESISTOR	1/16W 390Ω-F
R 727	103P494O90	CHIP METAL RESISTOR	1/16W 10kΩ-F

SYMBOL No.	PARTS No.	PARTS NAME	DESCRIPTION
R 728	103P494O90	CHIP METAL RESISTOR	1/16W 10kΩ-F
R 738	103P494O30	CHIP METAL RESISTOR	1/16W 5.6kΩ-F
R 739	103P492O50	CHIP METAL RESISTOR	1/16W 1kΩ-F
R 740	103P492O50	CHIP METAL RESISTOR	1/16W 1kΩ-F
R 743	103P493O70	CHIP METAL RESISTOR	1/16W 3.3kΩ-F
R 744	103P494O10	CHIP METAL RESISTOR	1/16W 4.7kΩ-F
R 745	103P492O50	CHIP METAL RESISTOR	1/16W 1kΩ-F
R 746	103P492O50	CHIP METAL RESISTOR	1/16W 1kΩ-F
R 747	103P503O70	CHIP RESISTOR	1/16W 10kΩ-J
R 748	103P503O70	CHIP RESISTOR	1/16W 10kΩ-J
R 750	103P494O20	CHIP METAL RESISTOR	1/16W 5.1kΩ-F
R 755	103P500O50	CHIP RESISTOR	1/16W 22Ω-J
R 772	103P501O30	CHIP RESISTOR	1/16W 100Ω-J
R 773	103P501O30	CHIP RESISTOR	1/16W 100Ω-J
R 790	103P503O70	CHIP RESISTOR	1/16W 10kΩ-J
R 791	103P503O70	CHIP RESISTOR	1/16W 10kΩ-J
R 792	103P504O60	CHIP RESISTOR	1/16W 56kΩ-J
R 793	103P504O60	CHIP RESISTOR	1/16W 56kΩ-J
R 7A0	103P490O90	CHIP METAL RESISTOR	1/16W 220Ω-F
R 7A9	103P494O90	CHIP METAL RESISTOR	1/16W 10kΩ-F
R 7B0	103P497O70	CHIP METAL RESISTOR	1/16W 150kΩ-F
R 7C2	103P495O70	CHIP METAL RESISTOR	1/16W 22kΩ-F
R 7C3	103P495O70	CHIP METAL RESISTOR	1/16W 22kΩ-F
R 7C4	103P495O70	CHIP METAL RESISTOR	1/16W 22kΩ-F
R 7C5	103P495O70	CHIP METAL RESISTOR	1/16W 22kΩ-F
R 7C6	103P495O70	CHIP METAL RESISTOR	1/16W 22kΩ-F
R 7C7	103P495O70	CHIP METAL RESISTOR	1/16W 22kΩ-F
R 7C8	103P495O70	CHIP METAL RESISTOR	1/16W 22kΩ-F
R 7C9	103P495O70	CHIP METAL RESISTOR	1/16W 22kΩ-F
R 7D0	103P495O70	CHIP METAL RESISTOR	1/16W 22kΩ-F
R 7D1	103P495O70	CHIP METAL RESISTOR	1/16W 22kΩ-F
R 7D2	103P495O70	CHIP METAL RESISTOR	1/16W 22kΩ-F
R 7D3	103P495O70	CHIP METAL RESISTOR	1/16W 22kΩ-F
R 7D4	103P495O70	CHIP METAL RESISTOR	1/16W 22kΩ-F
R 7D5	103P495O70	CHIP METAL RESISTOR	1/16W 22kΩ-F
R 7D6	103P495O70	CHIP METAL RESISTOR	1/16W 22kΩ-F
R 7D7	103P495O70	CHIP METAL RESISTOR	1/16W 22kΩ-F
R 7D8	103P495O70	CHIP METAL RESISTOR	1/16W 22kΩ-F
R 7D9	103P495O70	CHIP METAL RESISTOR	1/16W 22kΩ-F
R 7E0	103P495O70	CHIP METAL RESISTOR	1/16W 22kΩ-F
R 7E1	103P495O70	CHIP METAL RESISTOR	1/16W 22kΩ-F
R 7E6	103P494O10	CHIP METAL RESISTOR	1/16W 4.7kΩ-F
R 7E7	103P494O10	CHIP METAL RESISTOR	1/16W 4.7kΩ-F
R 7F0	103P500O50	CHIP RESISTOR	1/16W 22Ω-J
R 7F1	103P500O50	CHIP RESISTOR	1/16W 22Ω-J
R 7F4	103P500O50	CHIP RESISTOR	1/16W 22Ω-J
R 7F5	103P500O50	CHIP RESISTOR	1/16W 22Ω-J
R 7F6	103P500O50	CHIP RESISTOR	1/16W 22Ω-J
R 7F7	103P500O50	CHIP RESISTOR	1/16W 22Ω-J
R 7K9	103P500O50	CHIP RESISTOR	1/16W 22Ω-J
R 7L4	103P494O90	CHIP METAL RESISTOR	1/16W 10kΩ-F
R 7U0	103P493O30	CHIP METAL RESISTOR	1/16W 2.2kΩ-F
R 7XA	103P492O50	CHIP METAL RESISTOR	1/16W 1kΩ-F
R 7XB	103P492O50	CHIP METAL RESISTOR	1/16W 1kΩ-F
R 7XC	103P494O90	CHIP METAL RESISTOR	1/16W10kΩ-F
R 7XD	103P494O90	CHIP METAL RESISTOR	1/16W 10kΩ-F
R 7XE	103P494O90	CHIP METAL RESISTOR	1/16W 10kΩ-F

SYMBOL No.	PARTS No.	PARTS NAME	DESCRIPTION
R 7XM	103P494O90	CHIP METAL RESISTOR	1/16W 10kΩ-F
R 7XN	103P494O90	CHIP METAL RESISTOR	1/16W 10kΩ-F
R 7XP	103P501O30	CHIP RESISTOR	1/16W 100Ω-J
R 7XR	103P494O90	CHIP METAL RESISTOR	1/16W 10kΩ-F
R 7XT	103P494O90	CHIP METAL RESISTOR	1/16W 10kΩ-F
R 7XW	103P494O90	CHIP METAL RESISTOR	1/16W 10kΩ-F
R 7XX	103P494O90	CHIP METAL RESISTOR	1/16W 10kΩ-F
R 7XY	103P494O90	CHIP METAL RESISTOR	1/16W 10kΩ-F
R 7Y2	103P490O90	CHIP METAL RESISTOR	1/16W 220Ω-F
R 7Y3	103P493O70	CHIP METAL RESISTOR	1/16W 3.3kΩ-F
R 7Y4	103P509O50	CHIP RESISTOR	0Ω (RM1608)
R 7Y5	103P490O90	CHIP METAL RESISTOR	1/16W 220Ω-F
R 7Y6	103P491O90	CHIP METAL RESISTOR	1/16W 560Ω-F
R 7Y7	103P509O50	CHIP RESISTOR	0Ω (RM1608)
R 7Y8	103P491O90	CHIP METAL RESISTOR	1/16W 560Ω-F
R 7Y9	103P494O80	CHIP METAL RESISTOR	1/16W 9.1kΩ-F
R 7YA	103P501O30	CHIP RESISTOR	1/16W 100Ω-J
R 7YB	103P501O30	CHIP RESISTOR	1/16W 100Ω-J
R 7YC	103P494O90	CHIP METAL RESISTOR	1/16W 10kΩ-F
R 7YD	103P494O90	CHIP METAL RESISTOR	1/16W 10kΩ-F
R 7YE	103P494O90	CHIP METAL RESISTOR	1/16W 10kΩ-F
R 7YF	103P494O90	CHIP METAL RESISTOR	1/16W 10kΩ-F
R 7YG	103P494O90	CHIP METAL RESISTOR	1/16W 10kΩ-F
R 7YH	103P494O90	CHIP METAL RESISTOR	1/16W 10kΩ-F
R 7YJ	103P494O90	CHIP METAL RESISTOR	1/16W 10kΩ-F
R 7YK	103P501O30	CHIP RESISTOR	1/16W 100Ω-J
R 7YU	103P501O30	CHIP RESISTOR	1/16W 100Ω-J
R 7Z1	103P490O10	CHIP METAL RESISTOR	1/16W 100Ω-F
R 7Z2	103P490O10	CHIP METAL RESISTOR	1/16W 100Ω-F
R 7Z4	103P490O10	CHIP METAL RESISTOR	1/16W 100Ω-F
R 806	103P490O10	CHIP METAL RESISTOR	1/16W 100Ω-F
R 807	103P500O10	CHIP RESISTOR	1/16W 10Ω-J
R 808	103P490O10	CHIP METAL RESISTOR	1/16W 100Ω-F
R 809	103P500O10	CHIP RESISTOR	1/16W 10Ω-J
R 812	103P490O10	CHIP METAL RESISTOR	1/16W 100Ω-F
R 813	103P500O10	CHIP RESISTOR	1/16W 10Ω-J
R 814	103P490O10	CHIP METAL RESISTOR	1/16W 100Ω-F
R 815	103P500O10	CHIP RESISTOR	1/16W 10Ω-J
R 816	103P490O10	CHIP METAL RESISTOR	1/16W 100Ω-F
R 817	103P500O10	CHIP RESISTOR	1/16W 10Ω-J
R 818	103P490O10	CHIP METAL RESISTOR	1/16W 100Ω-F
R 819	103P500O10	CHIP RESISTOR	1/16W 10Ω-J
R 820	103P490O10	CHIP METAL RESISTOR	1/16W 100Ω-F
R 821	103P500O10	CHIP RESISTOR	1/16W 10Ω-J
R 822	103P490O10	CHIP METAL RESISTOR	1/16W 100Ω-F
R 823	103P500O10	CHIP RESISTOR	1/16W 10Ω-J
R 824	103P490O10	CHIP METAL RESISTOR	1/16W 100Ω-F
R 825	103P500O10	CHIP RESISTOR	1/16W 10Ω-J
R 826	103P490O10	CHIP METAL RESISTOR	1/16W 100Ω-F
R 827	103P500O10	CHIP RESISTOR	1/16W 10Ω-J
R 828	103P490O10	CHIP METAL RESISTOR	1/16W 100Ω-F
R 829	103P500O10	CHIP RESISTOR	1/16W 10Ω-J
R 830	103P490O10	CHIP METAL RESISTOR	1/16W 100Ω-F
R 831	103P500O10	CHIP RESISTOR	1/16W 10Ω-J
R 832	103P509O50	CHIP RESISTOR	0Ω (RM1608)
R 834	103P494O90	CHIP METAL RESISTOR	1/16W 10kΩ-F
R 835	103P494O90	CHIP METAL RESISTOR	1/16W 10kΩ-F
R 836	103P494O90	CHIP METAL RESISTOR	1/16W 10kΩ-F
R 837	103P493O20	CHIP METAL RESISTOR	1/16W 2kΩ-F
R 838	103P493O60	CHIP METAL RESISTOR	1/16W 3kΩ-F
R 839	103P494O90	CHIP METAL RESISTOR	1/16W 10kΩ-F
R 845	103P492O50	CHIP METAL RESISTOR	1/16W 1kΩ-F
R 846	103P493O20	CHIP METAL RESISTOR	1/16W 2kΩ-F
R 847	103P493O20	CHIP METAL RESISTOR	1/16W 2kΩ-F
R 848	103P494O90	CHIP METAL RESISTOR	1/16W 10kΩ-F
R 849	103P500O10	CHIP RESISTOR	1/16W 10Ω-J
R 850	103P493O20	CHIP METAL RESISTOR	1/16W 2kΩ-F
R 851	103P493O20	CHIP METAL RESISTOR	1/16W 2kΩ-F
R 852	103P494O90	CHIP METAL RESISTOR	1/16W 10kΩ-F
R 853	103P500O10	CHIP RESISTOR	1/16W 10Ω-J
R 855	103P494O10	CHIP METAL RESISTOR	1/16W 4.7kΩ-F
R 8A6	103P490O10	CHIP METAL RESISTOR	1/16W 100Ω-F
R 8A7	103P500O10	CHIP RESISTOR	1/16W 10Ω-J
R 8A8	103P490O10	CHIP METAL RESISTOR	1/16W 100Ω-F
R 8A9	103P500O10	CHIP RESISTOR	1/16W 10Ω-J
R 8B2	103P490O10	CHIP METAL RESISTOR	1/16W 100Ω-F
R 8B3	103P500O10	CHIP RESISTOR	1/16W 10Ω-J
R 8B4	103P490O10	CHIP METAL RESISTOR	1/16W 100Ω-F
R 8B5	103P500O10	CHIP RESISTOR	1/16W 10Ω-J
R 8B6	103P490O10	CHIP METAL RESISTOR	1/16W 100Ω-F
R 8B7	103P500O10	CHIP RESISTOR	1/16W 10Ω-J
R 8B8	103P490O10	CHIP METAL RESISTOR	1/16W 100Ω-F
R 8B9	103P500O10	CHIP RESISTOR	1/16W 10Ω-J
R 8C0	103P490O10	CHIP METAL RESISTOR	1/16W 100Ω-F
R 8C1	103P500O10	CHIP RESISTOR	1/16W 10Ω-J
R 8C2	103P490O10	CHIP METAL RESISTOR	1/16W 100Ω-F
R 8C3	103P500O10	CHIP RESISTOR	1/16W 10Ω-J
R 8C4	103P490O10	CHIP METAL RESISTOR	1/16W 100Ω-F
R 8C5	103P500O10	CHIP RESISTOR	1/16W 10Ω-J
R 8C6	103P490O10	CHIP METAL RESISTOR	1/16W 100Ω-F
R 8C7	103P500O10	CHIP RESISTOR	1/16W 10Ω-J
R 8C8	103P490O10	CHIP METAL RESISTOR	1/16W 100Ω-F
R 8C9	103P500O10	CHIP RESISTOR	1/16W 10Ω-J
R 8D0	103P490O10	CHIP METAL RESISTOR	1/16W 100Ω-F
R 8D1	103P500O10	CHIP RESISTOR	1/16W 10Ω-J
R 8D2	103P509O50	CHIP RESISTOR	0Ω (RM1608)
R 8D4	103P494O90	CHIP METAL RESISTOR	1/16W 10kΩ-F
R 8D5	103P494O90	CHIP METAL RESISTOR	1/16W 10kΩ-F
R 8D6	103P494O90	CHIP METAL RESISTOR	1/16W 10kΩ-F
R 8D7	103P493O20	CHIP METAL RESISTOR	1/16W 2kΩ-F
R 8D8	103P493O60	CHIP METAL RESISTOR	1/16W 3kΩ-F
R 8D9	103P494O90	CHIP METAL RESISTOR	1/16W 10kΩ-F
R 8E5	103P492O50	CHIP METAL RESISTOR	1/16W 1kΩ-F
R 8E6	103P493O20	CHIP METAL RESISTOR	1/16W 2kΩ-F
R 8E7	103P493O20	CHIP METAL RESISTOR	1/16W 2kΩ-F
R 8E8	103P494O90	CHIP METAL RESISTOR	1/16W 10kΩ-F
R 8E9	103P500O10	CHIP RESISTOR	1/16W 10Ω-J
R 8F0	103P493O20	CHIP METAL RESISTOR	1/16W 2kΩ-F
R 8F1	103P493O20	CHIP METAL RESISTOR	1/16W 2kΩ-F
R 8F2	103P494O90	CHIP METAL RESISTOR	1/16W 10kΩ-F
R 8F3	103P500O10	CHIP RESISTOR	1/16W 10Ω-J
R 8F5	103P494O10	CHIP METAL RESISTOR	1/16W 4.7kΩ-F
R 8M6	103P490O10	CHIP METAL RESISTOR	1/16W 100Ω-F

COMMON USE

SYMBOL No.	PARTS No.	PARTS NAME	DESCRIPTION
R 8M7	103P500O10	CHIP RESISTOR	1/16W 10Ω-J
R 8M8	103P490O10	CHIP METAL RESISTOR	1/16W 100Ω-F
R 8M9	103P500O10	CHIP RESISTOR	1/16W 10Ω-J
R 8N2	103P490O10	CHIP METAL RESISTOR	1/16W 100Ω-F
R 8N3	103P500O10	CHIP RESISTOR	1/16W 10Ω-J
R 8N4	103P490O10	CHIP METAL RESISTOR	1/16W 100Ω-F
R 8N5	103P500O10	CHIP RESISTOR	1/16W 10Ω-J
R 8N6	103P490O10	CHIP METAL RESISTOR	1/16W 100Ω-F
R 8N7	103P500O10	CHIP RESISTOR	1/16W 10Ω-J
R 8N8	103P490O10	CHIP METAL RESISTOR	1/16W 100Ω-F
R 8N9	103P500O10	CHIP RESISTOR	1/16W 10Ω-J
R 8P0	103P490O10	CHIP METAL RESISTOR	1/16W 100Ω-F
R 8P1	103P500O10	CHIP RESISTOR	1/16W 10Ω-J
R 8P2	103P490O10	CHIP METAL RESISTOR	1/16W 100Ω-F
R 8P3	103P500O10	CHIP RESISTOR	1/16W 10Ω-J
R 8P4	103P490O10	CHIP METAL RESISTOR	1/16W 100Ω-F
R 8P5	103P500O10	CHIP RESISTOR	1/16W 10Ω-J
R 8P6	103P490O10	CHIP METAL RESISTOR	1/16W 100Ω-F
R 8P7	103P500O10	CHIP RESISTOR	1/16W 10Ω-J
R 8P8	103P490O10	CHIP METAL RESISTOR	1/16W 100Ω-F
R 8P9	103P500O10	CHIP RESISTOR	1/16W 10Ω-J
R 8Q0	103P490O10	CHIP METAL RESISTOR	1/16W 100Ω-F
R 8Q1	103P500O10	CHIP RESISTOR	1/16W 10Ω-J
R 8Q2	103P509O50	CHIP RESISTOR	0Ω (RM1608)
R 8Q4	103P494O90	CHIP METAL RESISTOR	1/16W10kΩ-F
R 8Q5	103P494O90	CHIP METAL RESISTOR	1/16W 10kΩ-F
R 8Q6	103P494O90	CHIP METAL RESISTOR	1/16W 10kΩ-F
R 8Q7	103P493O20	CHIP METAL RESISTOR	1/16W 2kΩ-F
R 8Q8	103P493O60	CHIP METAL RESISTOR	1/16W 3kΩ-F
R 8Q9	103P494O90	CHIP METAL RESISTOR	1/16W 10kΩ-F
R 8R5	103P492O50	CHIP METAL RESISTOR	1/16W 1kΩ-F
R 8R6	103P493O20	CHIP METAL RESISTOR	1/16W 2kΩ-F
R 8R7	103P493O20	CHIP METAL RESISTOR	1/16W 2kΩ-F
R 8R8	103P494O90	CHIP METAL RESISTOR	1/16W 10kΩ-F
R 8R9	103P500O10	CHIP RESISTOR	1/16W 10Ω-J
R 8S0	103P493O20	CHIP METAL RESISTOR	1/16W 2kΩ-F
R 8S1	103P493O20	CHIP METAL RESISTOR	1/16W 2kΩ-F
R 8S2	103P494O90	CHIP METAL RESISTOR	1/16W 10kΩ-F
R 8S3	103P500O10	CHIP RESISTOR	1/16W 10Ω-J
R 8S5	103P494O10	CHIP METAL RESISTOR	1/16W 4.7kΩ-F
R 900	103P488O00	CHIP METAL RESISTOR	1/4W 1Ω-J
R 901	103P488O00	CHIP METAL RESISTOR	1/4W 1Ω-J
R 906	103P475O50	CHIP RESISTOR	1/10W 18kΩ-F
R 907	103P475O70	CHIP RESISTOR	1/10W 22kΩ-F
⚠ R 908	109P115O10	CEMENT RESISTOR	10Ω-J
⚠ R 909	109P115O10	CEMENT RESISTOR	10Ω-J
R 915	103P472O50	CHIP RESISTOR	1/10W 1kΩ-F
R 916	103P471O80	CHIP RESISTOR	1/10W 510Ω-F
R 920	103P472O80	CHIP RESISTOR	1/10W 1.3kΩ-F
R 925	103P470O10	CHIP RESISTOR	1/10W 100Ω-F
R 950	103P477O30	CHIP RESISTOR	1/10W 100kΩ-F
R 951	103P475O70	CHIP RESISTOR	1/10W 22kΩ-F
R 952	103P804O50	CHIP METAL RESISTOR	1W 47kΩ-J
R 953	103P484O10	CHIP METAL RESISTOR	1/4W 22kΩ-J
R 954	103P484O10	CHIP METAL RESISTOR	1/4W 22kΩ-J
R 955	103P484O10	CHIP METAL RESISTOR	1/4W 22kΩ-J
R 956	103P474O90	CHIP RESISTOR	1/10W 10kΩ-F

SYMBOL No.	PARTS No.	PARTS NAME	DESCRIPTION
⚠ R 957	103P752O30	FUSE RESISTOR	1/4W 680Ω-J
R 960	103P483O20	CHIP METAL RESISTOR	1/4W 3.9kΩ-J
R 961	103P480O10	CHIP METAL RESISTOR	1/4W 10Ω-J
R 962	103P483O20	CHIP METAL RESISTOR	1/4W 3.9kΩ-J
⚠ R 963	109D021O60	COMPOSITION RESISTOR	1/2W 2.2MΩ-K
⚠ R 964	109D021O60	COMPOSITION RESISTOR	1/2W 2.2MΩ-K
R 967	103P482O40	CHIP METAL RESISTOR	1/4W 820Ω-J
R 968	103P472O50	CHIP RESISTOR	1/10W 1kΩ-F
R 969	103P475O70	CHIP RESISTOR	1/10W 22kΩ-F
R 970	103P801O00	CHIP METAL RESISTOR	1W 56Ω-J
R 971	103P801O00	CHIP METAL RESISTOR	1W 56Ω-J
R 972	103P804O50	CHIP METAL RESISTOR	1W 47kΩ-J
R 976	103P481O10	CHIP METAL RESISTOR	1/4W 68Ω-J
R 9A0	103P472O80	CHIP RESISTOR	1/10W 1.3kΩ-F
R 9A1	103P471O10	CHIP RESISTOR	1/10W 270Ω-F
R 9A2	103P474O10	CHIP RESISTOR	1/10W 4.7kΩ-F
R 9A3	103P474O10	CHIP RESISTOR	1/10W 4.7kΩ-F
R 9A4	103P481O70	CHIP METAL RESISTOR	1/4W 220Ω-J
R 9A5	103P474O30	CHIP RESISTOR	1/10W 5.6kΩ-F
R 9A6	103P473O70	CHIP RESISTOR	1/10W 3.3kΩ-F
R 9A7	103P482O00	CHIP METAL RESISTOR	1/4W 390Ω-J
R 9A8	103P482O00	CHIP METAL RESISTOR	1/4W 390Ω-J
R 9A9	103P472O70	CHIP RESISTOR	1/10W 1.2kΩ-F
R 9B0	103P482O90	CHIP METAL RESISTOR	1/4W 2.2kΩ-J
R 9B1	103P482O50	CHIP METAL RESISTOR	1/4W 1kΩ-J
R 9B2	103P472O70	CHIP RESISTOR	1/10W 1.2kΩ-F
R 9B3	103P474O10	CHIP RESISTOR	1/10W 4.7kΩ-F
R 9B4	103P482O30	CHIP METAL RESISTOR	1/4W 680Ω-J
R 9B5	103P474O10	CHIP RESISTOR	1/10W 4.7kΩ-F
R 9B6	103P474O10	CHIP RESISTOR	1/10W 4.7kΩ-F
R 9B7	103P409O50	CHIP RESISTOR	0.1W 0Ω(2125)
R 9B9	103P480O30	CHIP METAL RESISTOR	1/4W 15Ω-J
R 9C0	103P480O20	CHIP METAL RESISTOR	1/4W 12Ω-J
R 9M0	103P477O70	CHIP RESISTOR	1/10W 150kΩ-F
R 9M1	103P477O70	CHIP RESISTOR	1/10W 150kΩ-F
R 9M2	103P476O50	CHIP RESISTOR	1/10W 47kΩ-F
R 9M3	103P474O90	CHIP RESISTOR	1/10W 10kΩ-F
R 9M4	103P473O10	CHIP RESISTOR	1/10W 1.8kΩ-F
R 9M5	103P479O30	CHIP METAL RESISTOR	1/10W 680kΩ-F
R 9M6	103P476O10	CHIP RESISTOR	1/10W 33kΩ-F
R 9M7	103P474O90	CHIP RESISTOR	1/10W 10kΩ-F
R 9M8	103P473O30	CHIP RESISTOR	1/10W 2.2kΩ-F
R 9M9	103P400O10	CHIP RESISTOR	1/10W 10Ω-J
R 9N0	103P477O50	CHIP RESISTOR	1/10W 120kΩ-F
R 9N1	103P475O40	CHIP RESISTOR	1/10W 16kΩ-F
R 9N2	103P470O10	CHIP RESISTOR	1/10W 100Ω-F
R 9N3	103P471O20	CHIP RESISTOR	1/10W 300Ω-F
R 9S0	103P472O50	CHIP RESISTOR	1/10W 1kΩ-F
R 9S1	103P470O30	CHIP RESISTOR	1/10W 120Ω-F
R 9S2	103P470O30	CHIP RESISTOR	1/10W 120Ω-F
R 9S3	103P470O30	CHIP RESISTOR	1/10W 120Ω-F
R 9S4	103P470O30	CHIP RESISTOR	1/10W 120Ω-F
R 9S5	103P470O30	CHIP RESISTOR	1/10W 120Ω-F
R 9S6	103P472O50	CHIP RESISTOR	1/10W 1kΩ-F
R 9S7	103P470O30	CHIP RESISTOR	1/10W 120Ω-F
R 9S8	103P470O30	CHIP RESISTOR	1/10W 120Ω-F
R 9S9	103P470O30	CHIP RESISTOR	1/10W 120Ω-F

COMMON USE

SYMBOL No.	PARTS No.	PARTS NAME	DESCRIPTION
R 9T0	103P470O30	CHIP RESISTOR	1/10W 120Ω-F
R 9T1	103P470O30	CHIP RESISTOR	1/10W 120Ω-F
R 9T2	103P470O10	CHIP RESISTOR	1/10W 100Ω-F
R 9T3	103P470O10	CHIP RESISTOR	1/10W 100Ω-F
R 9T4	103P470O10	CHIP RESISTOR	1/10W 100Ω-F
R 9T5	103P470O10	CHIP RESISTOR	1/10W 100Ω-F
R 9T6	103P409O50	CHIP RESISTOR	0.1W 0Ω(2125)
R 9V0	103P480O10	CHIP METAL RESISTOR	1/4W 10Ω-J
R 9V1	103P483O70	CHIP METAL RESISTOR	1/4W 10kΩ-J
R 9V2	103P480O10	CHIP METAL RESISTOR	1/4W 10Ω-J
R 9V3	103P483O70	CHIP METAL RESISTOR	1/4W 10kΩ-J
R 9V4	103P804O50	CHIP METAL RESISTOR	1W 47kΩ-J
R 9V5	103P804O50	CHIP METAL RESISTOR	1W 47kΩ-J
R 9V6	103P733O70	CHIP METAL RESISTOR	1/2W 10kΩ-J
R 9V7	109D149O10	CEMENT METAL R	5W 4.7kΩ-J
R 9V8	109D149O10	CEMENT METAL R	5W 4.7kΩ-J
R 9W2	103P471O90	CHIP RESISTOR	1/10W 560Ω-F
R 9W3	103P470O90	CHIP RESISTOR	1/10W 220Ω-F
R 9W4	103P473O10	CHIP RESISTOR	1/10W 1.8kΩ-F
R 9W5	103P473O10	CHIP RESISTOR	1/10W 1.8kΩ-F
R 9W6	103P804O50	CHIP METAL RESISTOR	1W 47kΩ-J
R 9W7	103P804O50	CHIP METAL RESISTOR	1W 47kΩ-J
R 9W8	103P734O10	CHIP METAL RESISTOR	1/2W 22kΩ-J
R 9X0	103P475O70	CHIP RESISTOR	1/10W 22kΩ-F
R 9X1	103P475O90	CHIP RESISTOR	1/10W 27kΩ-F
R 9X2	103P476O00	CHIP RESISTOR	1/10W 30kΩ-F
R 9X3	103P472O10	CHIP RESISTOR	1/10W 680Ω-F
R 9X4	103P474O90	CHIP RESISTOR	1/10W 10kΩ-F
R 9X5	103P479O70	CHIP RESISTOR	1/10W 1MΩ-F
R 9X6	103P475O30	CHIP RESISTOR	1/10W 15kΩ-F
R 9X7	103P473O40	CHIP RESISTOR	1/10W 2.4kΩ-F
R 9X8	103P470O10	CHIP RESISTOR	1/10W 100Ω-F
R 9Y0	103P475O80	CHIP RESISTOR	1/10W 24kΩ-F
R 9Y1	103P475O60	CHIP RESISTOR	1/10W 20kΩ-F
R 9Y2	103P475O70	CHIP RESISTOR	1/10W 22kΩ-F
R 9Y3	103P476O50	CHIP RESISTOR	1/10W 47kΩ-F
R 9Y4	103P472O70	CHIP RESISTOR	1/10W 1.2kΩ-F
R 9Y5	103P470O70	CHIP RESISTOR	1/10W 180Ω-F
R 9Y6	103P474O50	CHIP RESISTOR	1/10W 6.8Ω-K
R 9Y7	103P476O50	CHIP RESISTOR	1/10W 47kΩ-F
R 9Y8	103P473O50	CHIP RESISTOR	1/10W 2.7kΩ-F
R 9Z0	103P473O50	CHIP RESISTOR	1/10W 2.7kΩ-F
R 9Z1	103P482O70	CHIP METAL RESISTOR	1/4W 1.5kΩ-J
R 9Z2	103P475O70	CHIP RESISTOR	1/10W 22kΩ-F
R 9Z4	103P474O50	CHIP RESISTOR	1/10W 6.8Ω-K
R 9Z5	103P477O30	CHIP RESISTOR	1/10W 100kΩ-F
R 9Z6	103P409O50	CHIP RESISTOR	0.1W 0Ω(2125)
R 9Z7	103P409O50	CHIP RESISTOR	0.1W 0Ω(2125)
R 9Z8	103P409O50	CHIP RESISTOR	0.1W 0Ω(2125)
	CAPACITORS AND TRIMMERS		
C 201	141P144O20	CHIP CAPACITOR	F16V 0.1μF-Z
C 202	141P144O20	CHIP CAPACITOR	F16V 0.1μF-Z
C 203	141P144O20	CHIP CAPACITOR	F16V 0.1μF-Z
C 204	141P144O20	CHIP CAPACITOR	F16V 0.1μF-Z
C 205	141P144O20	CHIP CAPACITOR	F16V 0.1μF-Z
C 206	141P144O20	CHIP CAPACITOR	F16V 0.1μF-Z
C 207	154P355O20	CHIP CAPACITOR	SL50V 470pF-J
C 208	141P144O60	CHIP CAPACITOR	F16/10V 1μF-Z
C 210	141P133O10	CHIP CAPACITOR	B10V 3.3μF-M
C 211	141P133O10	CHIP CAPACITOR	B10V 3.3μF-M
C 212	141P133O10	CHIP CAPACITOR	B10V 3.3μF-M
C 213	141P144O60	CHIP CAPACITOR	F16/10V 1μF-Z
C 214	141P133O10	CHIP CAPACITOR	B10V 3.3μF-M
C 215	141P133O10	CHIP CAPACITOR	B10V 3.3μF-M
C 216	141P133O10	CHIP CAPACITOR	B10V 3.3μF-M
C 217	141P144O60	CHIP CAPACITOR	F16/10V 1μF-Z
C 218	141P144O60	CHIP CAPACITOR	F16/10V 1μF-Z
C 219	154P343O50	CHIP CAPACITOR	CH50V 100pF-J
C 220	141P144O60	CHIP CAPACITOR	F16/10V 1μF-Z
C 221	141P144O60	CHIP CAPACITOR	F16/10V 1μF-Z
C 222	154P340O30	CHIP CAPACITOR	CK50V 2P
C 223	154P340O30	CHIP CAPACITOR	CK50V 2P
C 224	154P340O30	CHIP CAPACITOR	CK50V 2P
C 228	141P143O80	CHIP CAPACITOR	F50V 0.01μF-Z
C 229	181P520O30	CHIP ELE CAPACITOR	6.3V 4.7μF-M
C 230	141P143O80	CHIP CAPACITOR	F50V 0.01μF-Z
C 231	181P520O30	CHIP ELE CAPACITOR	6.3V 4.7μF-M
C 232	141P143O80	CHIP CAPACITOR	F50V 0.01μF-Z
C 233	181P520O30	CHIP ELE CAPACITOR	6.3V 4.7μF-M
C 234	141P143O80	CHIP CAPACITOR	F50V 0.01μF-Z
C 235	181P520O30	CHIP ELE CAPACITOR	6.3V 4.7μF-M
C 236	141P143O80	CHIP CAPACITOR	F50V 0.01μF-Z
C 237	181P520O30	CHIP ELE CAPACITOR	6.3V 4.7μF-M
C 238	141P143O80	CHIP CAPACITOR	F50V 0.01μF-Z
C 239	181P520O30	CHIP ELE CAPACITOR	6.3V 4.7μF-M
C 240	141P144O60	CHIP CAPACITOR	F16/10V 1μF-Z
C 241	154P355O20	CHIP CAPACITOR	SL50V 470pF-J
C 243	141P144O60	CHIP CAPACITOR	F16/10V 1μF-Z
C 245	154P343O50	CHIP CAPACITOR	CH50V 100pF-J
C 246	181P520O30	CHIP ELE CAPACITOR	6.3V 4.7μF-M
C 249	181P520O30	CHIP ELE CAPACITOR	6.3V 4.7μF-M
C 250	181P520O30	CHIP ELE CAPACITOR	6.3V 4.7μF-M
C 251	141P143O80	CHIP CAPACITOR	F50V 0.01μF-Z
C 252	141P144O60	CHIP CAPACITOR	F16/10V 1μF-Z
C 254	141P144O60	CHIP CAPACITOR	F16/10V 1μF-Z
C 255	141P144O20	CHIP CAPACITOR	F16V 0.1μF-Z
C 256	141P144O20	CHIP CAPACITOR	F16V 0.1μF-Z
C 265	141P144O20	CHIP CAPACITOR	F16V 0.1μF-Z
C 266	141P144O20	CHIP CAPACITOR	F16V 0.1μF-Z
C 270	141P144O20	CHIP CAPACITOR	F16V 0.1μF-Z
C 271	141P144O20	CHIP CAPACITOR	F16V 0.1μF-Z
C 272	141P144O20	CHIP CAPACITOR	F16V 0.1μF-Z
C 273	141P144O20	CHIP CAPACITOR	F16V 0.1μF-Z
C 274	141P144O20	CHIP CAPACITOR	F16V 0.1μF-Z
C 275	141P144O20	CHIP CAPACITOR	F16V 0.1μF-Z
C 276	141P143O80	CHIP CAPACITOR	F50V 0.01μF-Z
C 277	181P520O30	CHIP ELE CAPACITOR	6.3V 4.7μF-M
C 278	141P143O80	CHIP CAPACITOR	F50V 0.01μF-Z
C 279	181P520O30	CHIP ELE CAPACITOR	6.3V 4.7μF-M
C 280	141P143O80	CHIP CAPACITOR	F50V 0.01μF-Z
C 281	181P520O30	CHIP ELE CAPACITOR	6.3V 4.7μF-M
C 282	141P143O80	CHIP CAPACITOR	F50V 0.01μF-Z

COMMON USE

SYMBOL No.	PARTS No.	PARTS NAME	DESCRIPTION
C 283	181P520O30	CHIP ELE CAPACITOR	6.3V 4.7μF-M
C 284	141P143O80	CHIP CAPACITOR	F50V 0.01μF-Z
C 285	181P520O30	CHIP ELE CAPACITOR	6.3V 4.7μF-M
C 286	141P143O80	CHIP CAPACITOR	F50V 0.01μF-Z
C 287	181P520O30	CHIP ELE CAPACITOR	6.3V 4.7μF-M
C 288	141P133O10	CHIP CAPACITOR	B10V 3.3μF-M
C 289	141P133O10	CHIP CAPACITOR	B10V 3.3μF-M
C 290	141P133O10	CHIP CAPACITOR	B10V 3.3μF-M
C 2A1	141P143O30	CHIP CAPACITOR	B16V 0.1μF-K
C 2A2	181P520O30	CHIP ELE CAPACITOR	6.3V 4.7μF-M
C 2A3	141P144O60	CHIP CAPACITOR	F16/10V 1μF-Z
C 2A5	181P520O30	CHIP ELE CAPACITOR	6.3V 4.7μF-M
C 2A6	181P520O30	CHIP ELE CAPACITOR	6.3V 4.7μF-M
C 2B8	141P144O20	CHIP CAPACITOR	F16V 0.1μF-Z
C 2B9	141P144O60	CHIP CAPACITOR	F16/10V 1μF-Z
C 2C0	172P392O50	CHIP CAPACITOR	16V 0.1μF-J
C 2C1	172P390O70	CHIP CAPACITOR	16V 3300pF-J
C 2C2	172P392O50	CHIP CAPACITOR	16V 0.1μF-J
C 2C3	172P392O50	CHIP CAPACITOR	16V 0.1μF-J
C 2C4	154P341O50	CHIP CAPACITOR	CH50V 15pF-J
C 2C5	154P341O50	CHIP CAPACITOR	CH50V 15pF-J
C 2C6	172P392O50	CHIP CAPACITOR	16V 0.1μF-J
C 2C7	141P143O30	CHIP CAPACITOR	B16V 0.1μF-K
C 2C8	141P143O30	CHIP CAPACITOR	B16V 0.1μF-K
C 2C9	141P143O30	CHIP CAPACITOR	B16V 0.1μF-K
C 2D0	141P143O30	CHIP CAPACITOR	B16V 0.1μF-K
C 2D1	141P144O20	CHIP CAPACITOR	F16V 0.1μF-Z
C 2D2	181P520O10	CHIP ELE CAPACITOR	6.3V 22μF-M
C 2D3	141P144O60	CHIP CAPACITOR	F16/10V 1μF-Z
C 2D4	141P144O20	CHIP CAPACITOR	F16V 0.1μF-Z
C 2D5	141P144O20	CHIP CAPACITOR	F16V 0.1μF-Z
C 2D6	181P520O10	CHIP ELE CAPACITOR	6.3V 22μF-M
C 2D7	141P144O20	CHIP CAPACITOR	F16V 0.1μF-Z
C 2D8	141P144O20	CHIP CAPACITOR	F16V 0.1μF-Z
C 2D9	181P522O60	CHIP ELE CAPACITOR	16V 47μF-M
C 2E0	172P390O70	CHIP CAPACITOR	16V 3300pF-J
C 2E1	172P392O50	CHIP CAPACITOR	16V 0.1μF-J
C 2E4	172P392O50	CHIP CAPACITOR	16V 0.1μF-J
C 2E5	172P391O70	CHIP CAPACITOR	16V 0.022μF-J
C 2F0	154P341O70	CHIP CAPACITOR	CH50V 18pF-J
C 2F1	154P341O30	CHIP CAPACITOR	CH50V 12pF-J
C 2F4	141P144O20	CHIP CAPACITOR	F16V 0.1μF-Z
C 2F5	181P520O30	CHIP ELE CAPACITOR	6.3V 4.7μF-M
C 2F8	141P144O20	CHIP CAPACITOR	F16V 0.1μF-Z
C 2F9	181P520O30	CHIP ELE CAPACITOR	6.3V 4.7μF-M
C 2H1	181P522O60	CHIP ELE CAPACITOR	16V 47μF-M
C 2H2	141P144O20	CHIP CAPACITOR	F16V 0.1μF-Z
C 2H3	141P144O20	CHIP CAPACITOR	F16V 0.1μF-Z
C 2H4	141P144O20	CHIP CAPACITOR	F16V 0.1μF-Z
C 2H5	141P144O20	CHIP CAPACITOR	F16V 0.1μF-Z
C 2H7	141P144O20	CHIP CAPACITOR	F16V 0.1μF-Z
C 2H8	141P144O20	CHIP CAPACITOR	F16V 0.1μF-Z
C 2H9	141P144O20	CHIP CAPACITOR	F16V 0.1μF-Z
C 2J0	154P340O80	CHIP CAPACITOR	CH50V 7pF-C
C 2J1	154P342O30	CHIP CAPACITOR	CH50V 33pF-J
C 2J2	154P343O30	CHIP CAPACITOR	CH50V 82pF-J
C 2J3	154P340O80	CHIP CAPACITOR	CH50V 7pF-C
C 2J4	154P342O30	CHIP CAPACITOR	CH50V 33pF-J
C 2J5	154P343O30	CHIP CAPACITOR	CH50V 82pF-J
C 2K5	141P144O60	CHIP CAPACITOR	F16/10V 1μF-Z
C 2K6	154P341O50	CHIP CAPACITOR	CH50V 15pF-J
C 2K7	181P520O80	CHIP ELE CAPACITOR	10V 33μF-M
C 2K8	141P141O70	CHIP CAPACITOR	B50V 4700pF-K
C 2K9	154P348O60	CHIP CAPACITOR	CH50V 220pF-G
C 2L0	181P520O10	CHIP ELE CAPACITOR	6.3V 22μF-M
C 2L1	154P348O40	CHIP CAPACITOR	CH50V 150pF-G
C 2L3	154P342O10	CHIP CAPACITOR	CH50V 27pF-J
C 2L4	141P144O20	CHIP CAPACITOR	F16V 0.1μF-Z
C 2L5	181P520O30	CHIP ELE CAPACITOR	6.3V 4.7μF-M
C 2N1	181P520O30	CHIP ELE CAPACITOR	6.3V 4.7μF-M
C 2N3	181P520O30	CHIP ELE CAPACITOR	6.3V 4.7μF-M
C 2N4	181P520O30	CHIP ELE CAPACITOR	6.3V 4.7μF-M
C 300	141P135O60	CHIP CAPACITOR	F16V 2.2μF-Z
C 301	141P135O60	CHIP CAPACITOR	F16V 2.2μF-Z
C 302	141P135O60	CHIP CAPACITOR	F16V 2.2μF-Z
C 303	141P135O60	CHIP CAPACITOR	F16V 2.2μF-Z
C 304	141P135O60	CHIP CAPACITOR	F16V 2.2μF-Z
C 305	141P135O60	CHIP CAPACITOR	F16V 2.2μF-Z
C 306	141P144O60	CHIP CAPACITOR	F16/10V 1μF-Z
C 307	141P135O60	CHIP CAPACITOR	F16V 2.2μF-Z
C 308	141P135O60	CHIP CAPACITOR	F16V 2.2μF-Z
C 309	141P144O60	CHIP CAPACITOR	F16/10V 1μF-Z
C 310	141P144O60	CHIP CAPACITOR	F16/10V 1μF-Z
C 311	154P355O20	CHIP CAPACITOR	SL50V 470pF-J
C 312	154P355O20	CHIP CAPACITOR	SL50V 470pF-J
C 317	154P355O20	CHIP CAPACITOR	SL50V 470pF-J
C 318	154P355O20	CHIP CAPACITOR	SL50V 470pF-J
C 320	154P355O20	CHIP CAPACITOR	SL50V 470pF-J
C 321	154P355O20	CHIP CAPACITOR	SL50V 470pF-J
C 326	154P355O20	CHIP CAPACITOR	SL50V 470pF-J
C 327	154P355O20	CHIP CAPACITOR	SL50V 470pF-J
C 350	141P144O60	CHIP CAPACITOR	F16/10V 1μF-Z
C 351	141P144O60	CHIP CAPACITOR	F16/10V 1μF-Z
C 352	141P143O80	CHIP CAPACITOR	F50V 0.01μF-Z
C 353	181P524O90	CHIP ELE CAPACITOR	35V 4.7μF-M
C 354	141P144O60	CHIP CAPACITOR	F16/10V 1μF-Z
C 362	141P144O60	CHIP CAPACITOR	F16/10V 1μF-Z
C 363	141P144O60	CHIP CAPACITOR	F16/10V 1μF-Z
C 370	181P522O60	CHIP ELE CAPACITOR	16V 47μF-M
C 371	141P144O20	CHIP CAPACITOR	F16V 0.1μF-Z
C 373	141P144O60	CHIP CAPACITOR	F16/10V 1μF-Z
C 374	141P144O60	CHIP CAPACITOR	F16/10V 1μF-Z
C 375	141P144O60	CHIP CAPACITOR	F16/10V 1μF-Z
C 377	141P144O60	CHIP CAPACITOR	F16/10V 1μF-Z
C 389	181P520O10	CHIP ELE CAPACITOR	6.3V 22μF-M
C 390	181P520O10	CHIP ELE CAPACITOR	6.3V 22μF-M
C 392	141P144O20	CHIP CAPACITOR	F16V 0.1μF-Z
C 394	141P137O40	CHIP CAPACITOR	B25V 0.022μF-K
C 395	181P520O80	CHIP ELE CAPACITOR	10V 33μF-M
C 398	172P392O50	CHIP CAPACITOR	16V 0.1μF-J
C 399	141P137O40	CHIP CAPACITOR	B25V 0.022μF-K
C 3A0	181P520O80	CHIP ELE CAPACITOR	10V 33μF-M
C 3A3	172P392O50	CHIP CAPACITOR	16V 0.1μF-J

COMMON USE

SYMBOL No.	PARTS No.	PARTS NAME	DESCRIPTION
C 401	141P144O60	CHIP CAPACITOR	F16/10V 1μF-Z
C 402	141P144O20	CHIP CAPACITOR	F16V 0.1μF-Z
C 403	141P144O20	CHIP CAPACITOR	F16V 0.1μF-Z
C 404	141P144O20	CHIP CAPACITOR	F16V 0.1μF-Z
C 405	141P144O20	CHIP CAPACITOR	F16V 0.1μF-Z
C 422	141P144O20	CHIP CAPACITOR	F16V 0.1μF-Z
C 423	141P144O20	CHIP CAPACITOR	F16V 0.1μF-Z
C 424	141P144O20	CHIP CAPACITOR	F16V 0.1μF-Z
C 425	141P144O20	CHIP CAPACITOR	F16V 0.1μF-Z
C 430	141P144O60	CHIP CAPACITOR	F16/10V 1μF-Z
C 431	141P144O20	CHIP CAPACITOR	F16V 0.1μF-Z
C 432	141P144O20	CHIP CAPACITOR	F16V 0.1μF-Z
C 433	141P144O20	CHIP CAPACITOR	F16V 0.1μF-Z
C 434	141P144O20	CHIP CAPACITOR	F16V 0.1μF-Z
C 435	141P144O20	CHIP CAPACITOR	F16V 0.1μF-Z
C 436	141P144O20	CHIP CAPACITOR	F16V 0.1μF-Z
C 437	141P144O20	CHIP CAPACITOR	F16V 0.1μF-Z
C 438	141P144O20	CHIP CAPACITOR	F16V 0.1μF-Z
C 440	141P144O60	CHIP CAPACITOR	F16/10V 1μF-Z
C 441	141P144O20	CHIP CAPACITOR	F16V 0.1μF-Z
C 442	141P144O20	CHIP CAPACITOR	F16V 0.1μF-Z
C 443	141P144O20	CHIP CAPACITOR	F16V 0.1μF-Z
C 444	141P144O20	CHIP CAPACITOR	F16V 0.1μF-Z
C 445	141P144O20	CHIP CAPACITOR	F16V 0.1μF-Z
C 460	141P144O60	CHIP CAPACITOR	F16/10V 1μF-Z
C 461	141P144O20	CHIP CAPACITOR	F16V 0.1μF-Z
C 462	141P144O20	CHIP CAPACITOR	F16V 0.1μF-Z
C 463	141P144O20	CHIP CAPACITOR	F16V 0.1μF-Z
C 464	141P144O20	CHIP CAPACITOR	F16V 0.1μF-Z
C 465	141P144O20	CHIP CAPACITOR	F16V 0.1μF-Z
C 466	141P144O20	CHIP CAPACITOR	F16V 0.1μF-Z
C 467	141P144O20	CHIP CAPACITOR	F16V 0.1μF-Z
C 468	141P144O20	CHIP CAPACITOR	F16V 0.1μF-Z
C 480	141P144O60	CHIP CAPACITOR	F16/10V 1μF-Z
C 482	141P144O20	CHIP CAPACITOR	F16V 0.1μF-Z
C 483	141P144O20	CHIP CAPACITOR	F16V 0.1μF-Z
C 484	141P144O20	CHIP CAPACITOR	F16V 0.1μF-Z
C 485	141P144O20	CHIP CAPACITOR	F16V 0.1μF-Z
C 490	141P144O60	CHIP CAPACITOR	F16/10V 1μF-Z
C 491	141P144O20	CHIP CAPACITOR	F16V 0.1μF-Z
C 492	141P144O20	CHIP CAPACITOR	F16V 0.1μF-Z
C 493	141P144O20	CHIP CAPACITOR	F16V 0.1μF-Z
C 494	141P144O20	CHIP CAPACITOR	F16V 0.1μF-Z
C 495	141P144O20	CHIP CAPACITOR	F16V 0.1μF-Z
C 496	141P144O20	CHIP CAPACITOR	F16V 0.1μF-Z
C 497	141P144O20	CHIP CAPACITOR	F16V 0.1μF-Z
C 498	141P144O20	CHIP CAPACITOR	F16V 0.1μF-Z
C 4B3	141P144O60	CHIP CAPACITOR	F16/10V 1μF-Z
C 4B4	141P144O20	CHIP CAPACITOR	F16V 0.1μF-Z
C 4B5	141P144O60	CHIP CAPACITOR	F16/10V 1μF-Z
C 4B6	141P144O20	CHIP CAPACITOR	F16V 0.1μF-Z
C 4B8	141P144O60	CHIP CAPACITOR	F16/10V 1μF-Z
C 4B9	141P144O20	CHIP CAPACITOR	F16V 0.1μF-Z
C 4C1	141P144O60	CHIP CAPACITOR	F16/10V 1μF-Z
C 4C2	141P144O20	CHIP CAPACITOR	F16V 0.1μF-Z
C 4G3	141P144O60	CHIP CAPACITOR	F16/10V 1μF-Z
C 4G4	141P144O20	CHIP CAPACITOR	F16V 0.1μF-Z
C 4G5	141P144O60	CHIP CAPACITOR	F16/10V 1μF-Z
C 4G6	141P144O20	CHIP CAPACITOR	F16V 0.1μF-Z
C 4G8	141P144O60	CHIP CAPACITOR	F16/10V 1μF-Z
C 4G9	141P144O20	CHIP CAPACITOR	F16V 0.1μF-Z
C 4P1	141P144O20	CHIP CAPACITOR	F16V 0.1μF-Z
C 4R3	141P144O60	CHIP CAPACITOR	F16/10V 1μF-Z
C 4R4	141P144O20	CHIP CAPACITOR	F16V 0.1μF-Z
C 4R5	141P144O60	CHIP CAPACITOR	F16/10V 1μF-Z
C 4R6	141P144O20	CHIP CAPACITOR	F16V 0.1μF-Z
C 4R8	141P144O60	CHIP CAPACITOR	F16/10V 1μF-Z
C 4R9	141P144O20	CHIP CAPACITOR	F16V 0.1μF-Z
C 4S1	141P144O20	CHIP CAPACITOR	F16V 0.1μF-Z
C 4S2	141P144O20	CHIP CAPACITOR	F16V 0.1μF-Z
C 4S3	141P140O10	CHIP CAPACITOR	B50V 220pF-K
C 4X1	141P144O20	CHIP CAPACITOR	F16V 0.1μF-Z
C 500	181P520O30	CHIP ELE CAPACITOR	6.3V 4.7μF-M
C 501	141P144O60	CHIP CAPACITOR	F16/10V 1μF-Z
C 502	141P144O20	CHIP CAPACITOR	F16V 0.1μF-Z
C 504	141P144O20	CHIP CAPACITOR	F16V 0.1μF-Z
C 505	141P143O30	CHIP CAPACITOR	B16V 0.1μF-K
C 506	141P144O20	CHIP CAPACITOR	F16V 0.1μF-Z
C 507	141P143O30	CHIP CAPACITOR	B16V 0.1μF-K
C 508	141P144O20	CHIP CAPACITOR	F16V 0.1μF-Z
C 509	141P144O20	CHIP CAPACITOR	F16V 0.1μF-Z
C 510	141P144O20	CHIP CAPACITOR	F16V 0.1μF-Z
C 511	141P144O20	CHIP CAPACITOR	F16V 0.1μF-Z
C 512	141P144O20	CHIP CAPACITOR	F16V 0.1μF-Z
C 513	141P144O60	CHIP CAPACITOR	F16/10V 1μF-Z
C 514	141P143O80	CHIP CAPACITOR	F50V 0.01μF-Z
C 515	141P144O20	CHIP CAPACITOR	F16V 0.1μF-Z
C 516	172P398O80	CHIP CAPACITOR	50V 100pF-J
C 517	172P392O50	CHIP CAPACITOR	16V 0.1μF-J
C 518	172P392O50	CHIP CAPACITOR	16V 0.1μF-J
C 519	172P390O20	CHIP CAPACITOR	50V 1200pF-J
C 520	141P141O70	CHIP CAPACITOR	B50V 4700pF-K
C 521	141P143O80	CHIP CAPACITOR	F50V 0.01μF-Z
C 522	154P342O70	CHIP CAPACITOR	CH50V 47pF-J
C 523	181P512O20	CHIP ELE CAPACITOR	NP16V4.7μF-M
C 524	181P522O30	CHIP ELE CAPACITOR	16V 10μF-M
C 525	141P144O30	CHIP CAPACITOR	F16V 0.22μF-Z
C 526	181P512O20	CHIP ELE CAPACITOR	NP16V4.7μF-M
C 527	141P144O20	CHIP CAPACITOR	F16V 0.1μF-Z
C 529	154P345O90	CHIP CAPACITOR	CH25V 1000pF-J
C 530	154P345O90	CHIP CAPACITOR	CH25V 1000pF-J
C 531	141P144O20	CHIP CAPACITOR	F16V 0.1μF-Z
C 532	141P144O20	CHIP CAPACITOR	F16V 0.1μF-Z
C 533	141P144O20	CHIP CAPACITOR	F16V 0.1μF-Z
C 534	181P526O10	CHIP ELE CAPACITOR	04W50V1μF-M
C 535	141P144O20	CHIP CAPACITOR	F16V 0.1μF-Z
C 544	172P392O50	CHIP CAPACITOR	16V 0.1μF-J
C 545	172P391O70	CHIP CAPACITOR	16V 0.022μF-J
C 550	181P522O60	CHIP ELE CAPACITOR	16V 47μF-M
C 551	141P144O20	CHIP CAPACITOR	F16V 0.1μF-Z
C 552	181P520O30	CHIP ELE CAPACITOR	6.3V 4.7μF-M
C 553	141P144O20	CHIP CAPACITOR	F16V 0.1μF-Z
C 5A0	154P342O70	CHIP CAPACITOR	CH50V 47pF-J
C 5A1	154P342O70	CHIP CAPACITOR	CH50V 47pF-J

COMMON USE

SYMBOL No.	PARTS No.	PARTS NAME	DESCRIPTION
C 5A2	154P343O90	CHIP CAPACITOR	CH50V 150pF-J
C 5A3	154P342O70	CHIP CAPACITOR	CH50V 47pF-J
C 5A4	154P343O90	CHIP CAPACITOR	CH50V 150pF-J
C 5A5	154P342O70	CHIP CAPACITOR	CH50V 47pF-J
C 5A6	141P141O90	CHIP CAPACITOR	B50V 6800pF-K
C 5A7	141P141O90	CHIP CAPACITOR	B50V 6800pF-K
C 5A8	141P141O90	CHIP CAPACITOR	B50V 6800pF-K
C 5A9	141P141O90	CHIP CAPACITOR	B50V 6800pF-K
C 5B0	154P343O90	CHIP CAPACITOR	CH50V 150pF-J
C 5B1	154P342O70	CHIP CAPACITOR	CH50V 47pF-J
C 5B2	154P342O70	CHIP CAPACITOR	CH50V 47pF-J
C 5B3	154P342O70	CHIP CAPACITOR	CH50V 47pF-J
C 5B4	154P342O70	CHIP CAPACITOR	CH50V 47pF-J
C 5B5	154P342O70	CHIP CAPACITOR	CH50V 47pF-J
C 5B6	141P144O20	CHIP CAPACITOR	F16V 0.1μF-Z
C 5B7	181P523O90	CHIP ELE CAPACITOR	25V 33μF-M
C 5B8	141P144O20	CHIP CAPACITOR	F16V 0.1μF-Z
C 5B9	141P144O20	CHIP CAPACITOR	F16V 0.1μF-Z
C 5C0	141P144O20	CHIP CAPACITOR	F16V 0.1μF-Z
C 5C1	141P144O20	CHIP CAPACITOR	F16V 0.1μF-Z
C 5C2	141P144O20	CHIP CAPACITOR	F16V 0.1μF-Z
C 5F0	154P342O70	CHIP CAPACITOR	CH50V 47pF-J
C 5F1	154P342O70	CHIP CAPACITOR	CH50V 47pF-J
C 5F2	154P343O90	CHIP CAPACITOR	CH50V 150pF-J
C 5F3	154P342O70	CHIP CAPACITOR	CH50V 47pF-J
C 5F4	154P343O90	CHIP CAPACITOR	CH50V 150pF-J
C 5F5	154P342O70	CHIP CAPACITOR	CH50V 47pF-J
C 5F6	141P141O90	CHIP CAPACITOR	B50V 6800pF-K
C 5F7	141P141O90	CHIP CAPACITOR	B50V 6800pF-K
C 5F8	141P141O90	CHIP CAPACITOR	B50V 6800pF-K
C 5F9	141P141O90	CHIP CAPACITOR	B50V 6800pF-K
C 5G0	154P343O90	CHIP CAPACITOR	CH50V 150pF-J
C 5G1	154P342O70	CHIP CAPACITOR	CH50V 47pF-J
C 5G2	154P342O70	CHIP CAPACITOR	CH50V 47pF-J
C 5G3	154P342O70	CHIP CAPACITOR	CH50V 47pF-J
C 5G4	154P342O70	CHIP CAPACITOR	CH50V 47pF-J
C 5G5	154P342O70	CHIP CAPACITOR	CH50V 47pF-J
C 5G6	141P144O20	CHIP CAPACITOR	F16V 0.1μF-Z
C 5G7	181P523O90	CHIP ELE CAPACITOR	25V 33μF-M
C 5G8	141P144O20	CHIP CAPACITOR	F16V 0.1μF-Z
C 5G9	141P144O20	CHIP CAPACITOR	F16V 0.1μF-Z
C 5H0	141P144O20	CHIP CAPACITOR	F16V 0.1μF-Z
C 5H1	141P144O20	CHIP CAPACITOR	F16V 0.1μF-Z
C 5H2	141P144O20	CHIP CAPACITOR	F16V 0.1μF-Z
C 5L0	154P342O70	CHIP CAPACITOR	CH50V 47pF-J
C 5L1	154P342O70	CHIP CAPACITOR	CH50V 47pF-J
C 5L2	154P343O90	CHIP CAPACITOR	CH50V 150pF-J
C 5L3	154P342O70	CHIP CAPACITOR	CH50V 47pF-J
C 5L4	154P343O90	CHIP CAPACITOR	CH50V 150pF-J
C 5L5	154P342O70	CHIP CAPACITOR	CH50V 47pF-J
C 5L6	141P141O90	CHIP CAPACITOR	B50V 6800pF-K
C 5L7	141P141O90	CHIP CAPACITOR	B50V 6800pF-K
C 5L8	141P141O90	CHIP CAPACITOR	B50V 6800pF-K
C 5L9	141P141O90	CHIP CAPACITOR	B50V 6800pF-K
C 5M0	154P343O90	CHIP CAPACITOR	CH50V 150pF-J
C 5M1	154P342O70	CHIP CAPACITOR	CH50V 47pF-J

SYMBOL No.	PARTS No.	PARTS NAME	DESCRIPTION
C 5M2	154P342O70	CHIP CAPACITOR	CH50V 47pF-J
C 5M3	154P342O70	CHIP CAPACITOR	CH50V 47pF-J
C 5M4	154P342O70	CHIP CAPACITOR	CH50V 47pF-J
C 5M5	154P342O70	CHIP CAPACITOR	CH50V 47pF-J
C 5M6	141P144O20	CHIP CAPACITOR	F16V 0.1μF-Z
C 5M7	181P523O90	CHIP ELE CAPACITOR	25V 33μF-M
C 5M8	141P144O20	CHIP CAPACITOR	F16V 0.1μF-Z
C 5M9	141P144O20	CHIP CAPACITOR	F16V 0.1μF-Z
C 5N0	141P144O20	CHIP CAPACITOR	F16V 0.1μF-Z
C 5N1	141P144O20	CHIP CAPACITOR	F16V 0.1μF-Z
C 5N2	141P144O20	CHIP CAPACITOR	F16V 0.1μF-Z
C 5R1	181P524O90	CHIP ELE CAPACITOR	35V 4.7μF-M
C 5R3	141P144O60	CHIP CAPACITOR	F16/10V 1μF-Z
C 5R4	141P144O20	CHIP CAPACITOR	F16V 0.1μF-Z
C 5R5	141P144O20	CHIP CAPACITOR	F16V 0.1μF-Z
C 5R6	141P144O20	CHIP CAPACITOR	F16V 0.1μF-Z
C 5S0	141P144O20	CHIP CAPACITOR	F16V 0.1μF-Z
C 5S1	141P144O20	CHIP CAPACITOR	F16V 0.1μF-Z
C 5S2	141P144O20	CHIP CAPACITOR	F16V 0.1μF-Z
C 5S3	141P144O20	CHIP CAPACITOR	F16V 0.1μF-Z
C 5S4	141P144O20	CHIP CAPACITOR	F16V 0.1μF-Z
C 5S5	141P144O20	CHIP CAPACITOR	F16V 0.1μF-Z
C 5S7	141P144O20	CHIP CAPACITOR	F16V 0.1μF-Z
C 5S8	141P144O20	CHIP CAPACITOR	F16V 0.1μF-Z
C 5S9	141P144O20	CHIP CAPACITOR	F16V 0.1μF-Z
C 5T2	141P144O20	CHIP CAPACITOR	F16V 0.1μF-Z
C 5T3	141P144O20	CHIP CAPACITOR	F16V 0.1μF-Z
C 5T4	181P526O20	CHIP ELE CAPACITOR	50V 2.2μF-M
C 5T5	181P526O20	CHIP ELE CAPACITOR	50V 2.2μF-M
C 5T6	181P526O20	CHIP ELE CAPACITOR	50V 2.2μF-M
C 5T7	141P144O60	CHIP CAPACITOR	F16/10V 1μF-Z
C 5T8	141P144O20	CHIP CAPACITOR	F16V 0.1μF-Z
C 600	181P522O30	CHIP ELE CAPACITOR	16V 10μF-M
C 601	141P144O60	CHIP CAPACITOR	F16/10V 1μF-Z
C 602	141P144O60	CHIP CAPACITOR	F16/10V 1μF-Z
C 603	141P143O30	CHIP CAPACITOR	B16V 0.1μF-K
C 604	154P341O50	CHIP CAPACITOR	CH50V 15pF-J
C 605	181P522O60	CHIP ELE CAPACITOR	16V 47μF-M
C 607	141P144O60	CHIP CAPACITOR	F16/10V 1μF-Z
C 608	141P144O20	CHIP CAPACITOR	F16V 0.1μF-Z
C 609	141P144O20	CHIP CAPACITOR	F16V 0.1μF-Z
C 610	141P144O20	CHIP CAPACITOR	F16V 0.1μF-Z
C 611	141P144O60	CHIP CAPACITOR	F16/10V 1μF-Z
C 612	181P522O30	CHIP ELE CAPACITOR	16V 10μF-M
C 613	141P144O60	CHIP CAPACITOR	F16/10V 1μF-Z
C 614	141P144O60	CHIP CAPACITOR	F16/10V 1μF-Z
C 615	141P143O30	CHIP CAPACITOR	B16V 0.1μF-K
C 616	154P341O50	CHIP CAPACITOR	CH50V 15pF-J
C 617	181P522O60	CHIP ELE CAPACITOR	16V 47μF-M
C 619	141P144O60	CHIP CAPACITOR	F16/10V 1μF-Z
C 620	141P144O20	CHIP CAPACITOR	F16V 0.1μF-Z
C 621	141P144O20	CHIP CAPACITOR	F16V 0.1μF-Z
C 622	141P144O20	CHIP CAPACITOR	F16V 0.1μF-Z
C 623	141P144O60	CHIP CAPACITOR	F16/10V 1μF-Z
C 624	181P522O30	CHIP ELE CAPACITOR	16V 10μF-M
C 625	141P144O60	CHIP CAPACITOR	F16/10V 1μF-Z
C 626	141P144O60	CHIP CAPACITOR	F16/10V 1μF-Z

SYMBOL No.	PARTS No.	PARTS NAME	DESCRIPTION
C 627	141P143O30	CHIP CAPACITOR	B16V 0.1μF-K
C 628	154P341O50	CHIP CAPACITOR	CH50V 15pF-J
C 629	181P522O60	CHIP ELE CAPACITOR	16V 47μF-M
C 631	141P144O60	CHIP CAPACITOR	F16/10V 1μF-Z
C 632	141P144O20	CHIP CAPACITOR	F16V 0.1μF-Z
C 633	141P144O20	CHIP CAPACITOR	F16V 0.1μF-Z
C 634	141P144O20	CHIP CAPACITOR	F16V 0.1μF-Z
C 635	141P144O60	CHIP CAPACITOR	F16/10V 1μF-Z
C 636	141P144O20	CHIP CAPACITOR	F16V 0.1μF-Z
C 637	141P143O30	CHIP CAPACITOR	B16V 0.1μF-K
C 638	181P524O90	CHIP ELE CAPACITOR	35V 4.7μF-M
C 650	141P143O30	CHIP CAPACITOR	B16V 0.1μF-K
C 651	141P143O30	CHIP CAPACITOR	B16V 0.1μF-K
C 652	141P143O30	CHIP CAPACITOR	B16V 0.1μF-K
C 653	141P142O10	CHIP CAPACITOR	B25V 0.01μF-K
C 654	141P142O10	CHIP CAPACITOR	B25V 0.01μF-K
C 655	141P144O20	CHIP CAPACITOR	F16V 0.1μF-Z
C 656	141P144O20	CHIP CAPACITOR	F16V 0.1μF-Z
C 657	141P144O20	CHIP CAPACITOR	F16V 0.1μF-Z
C 658	141P142O10	CHIP CAPACITOR	B25V 0.01μF-K
C 659	141P144O20	CHIP CAPACITOR	F16V 0.1μF-Z
C 660	141P142O10	CHIP CAPACITOR	B25V 0.01μF-K
C 663	141P142O10	CHIP CAPACITOR	B25V 0.01μF-K
C 680	141P144O60	CHIP CAPACITOR	F16/10V 1μF-Z
C 681	141P144O60	CHIP CAPACITOR	F16/10V 1μF-Z
C 682	141P144O60	CHIP CAPACITOR	F16/10V 1μF-Z
C 683	141P144O60	CHIP CAPACITOR	F16/10V 1μF-Z
C 684	141P144O20	CHIP CAPACITOR	F16V 0.1μF-Z
C 685	141P144O20	CHIP CAPACITOR	F16V 0.1μF-Z
C 686	141P144O20	CHIP CAPACITOR	F16V 0.1μF-Z
C 687	141P144O20	CHIP CAPACITOR	F16V 0.1μF-Z
C 688	141P144O60	CHIP CAPACITOR	F16/10V 1μF-Z
C 689	141P144O60	CHIP CAPACITOR	F16/10V 1μF-Z
C 690	141P144O60	CHIP CAPACITOR	F16/10V 1μF-Z
C 691	141P144O60	CHIP CAPACITOR	F16/10V 1μF-Z
C 692	141P144O20	CHIP CAPACITOR	F16V 0.1μF-Z
C 693	141P144O20	CHIP CAPACITOR	F16V 0.1μF-Z
C 694	141P144O20	CHIP CAPACITOR	F16V 0.1μF-Z
C 695	141P144O20	CHIP CAPACITOR	F16V 0.1μF-Z
C 696	141P144O60	CHIP CAPACITOR	F16/10V 1μF-Z
C 697	141P144O60	CHIP CAPACITOR	F16/10V 1μF-Z
C 698	141P144O60	CHIP CAPACITOR	F16/10V 1μF-Z
C 699	141P144O60	CHIP CAPACITOR	F16/10V 1μF-Z
C 6A0	141P144O20	CHIP CAPACITOR	F16V 0.1μF-Z
C 6A1	141P144O20	CHIP CAPACITOR	F16V 0.1μF-Z
C 6A2	141P144O20	CHIP CAPACITOR	F16V 0.1μF-Z
C 6A3	141P144O20	CHIP CAPACITOR	F16V 0.1μF-Z
C 6A4	181P520O40	CHIP ELE CAPACITOR	6.3V 100μF-M
C 6E0	141P144O20	CHIP CAPACITOR	F16V 0.1μF-Z
C 6E1	141P144O20	CHIP CAPACITOR	F16V 0.1μF-Z
C 6E2	141P143O80	CHIP CAPACITOR	F50V 0.01μF-Z
C 700	181P520O30	CHIP ELE CAPACITOR	6.3V 4.7μF-M
C 701	141P144O20	CHIP CAPACITOR	F16V 0.1μF-Z
C 702	141P143O80	CHIP CAPACITOR	F50V 0.01μF-Z
C 703	141P143O80	CHIP CAPACITOR	F50V 0.01μF-Z
C 704	141P143O80	CHIP CAPACITOR	F50V 0.01μF-Z
C 705	141P144O20	CHIP CAPACITOR	F16V 0.1μF-Z

SYMBOL No.	PARTS No.	PARTS NAME	DESCRIPTION
C 706	141P144O60	CHIP CAPACITOR	F16/10V 1μF-Z
C 707	141P144O20	CHIP CAPACITOR	F16V 0.1μF-Z
C 708	141P144O20	CHIP CAPACITOR	F16V 0.1μF-Z
C 709	141P144O20	CHIP CAPACITOR	F16V 0.1μF-Z
C 712	141P144O20	CHIP CAPACITOR	F16V 0.1μF-Z
C 713	181P520O40	CHIP ELE CAPACITOR	6.3V 100μF-M
C 715	181P520O40	CHIP ELE CAPACITOR	6.3V 100μF-M
C 716	181P520O40	CHIP ELE CAPACITOR	6.3V 100μF-M
C 718	181P520O40	CHIP ELE CAPACITOR	6.3V 100μF-M
C 719	181P520O40	CHIP ELE CAPACITOR	6.3V 100μF-M
C 720	181P522O60	CHIP ELE CAPACITOR	16V 47μF-M
C 721	181P522O60	CHIP ELE CAPACITOR	16V 47μF-M
C 722	181P522O60	CHIP ELE CAPACITOR	16V 47μF-M
C 723	181P523O90	CHIP ELE CAPACITOR	25V 33μF-M
C 724	141P144O20	CHIP CAPACITOR	F16V 0.1μF-Z
C 725	141P144O20	CHIP CAPACITOR	F16V 0.1μF-Z
C 727	141P144O20	CHIP CAPACITOR	F16V 0.1μF-Z
C 728	141P144O20	CHIP CAPACITOR	F16V 0.1μF-Z
C 729	141P144O20	CHIP CAPACITOR	F16V 0.1μF-Z
C 730	141P144O20	CHIP CAPACITOR	F16V 0.1μF-Z
C 731	141P143O80	CHIP CAPACITOR	F50V 0.01μF-Z
C 732	141P143O80	CHIP CAPACITOR	F50V 0.01μF-Z
C 733	141P143O80	CHIP CAPACITOR	F50V 0.01μF-Z
C 734	141P143O80	CHIP CAPACITOR	F50V 0.01μF-Z
C 735	141P143O80	CHIP CAPACITOR	F50V 0.01μF-Z
C 736	141P143O80	CHIP CAPACITOR	F50V 0.01μF-Z
C 737	141P143O80	CHIP CAPACITOR	F50V 0.01μF-Z
C 738	141P143O80	CHIP CAPACITOR	F50V 0.01μF-Z
C 739	141P143O80	CHIP CAPACITOR	F50V 0.01μF-Z
C 746	141P143O80	CHIP CAPACITOR	F50V 0.01μF-Z
C 747	141P143O80	CHIP CAPACITOR	F50V 0.01μF-Z
C 748	141P143O80	CHIP CAPACITOR	F50V 0.01μF-Z
C 749	141P143O80	CHIP CAPACITOR	F50V 0.01μF-Z
C 750	141P143O80	CHIP CAPACITOR	F50V 0.01μF-Z
C 751	141P143O80	CHIP CAPACITOR	F50V 0.01μF-Z
C 752	141P143O80	CHIP CAPACITOR	F50V 0.01μF-Z
C 761	141P140O50	CHIP CAPACITOR	B50V 470pF-K
C 762	141P144O20	CHIP CAPACITOR	F16V 0.1μF-Z
C 763	141P144O20	CHIP CAPACITOR	F16V 0.1μF-Z
C 765	141P140O50	CHIP CAPACITOR	B50V 470pF-K
C 766	141P144O20	CHIP CAPACITOR	F16V 0.1μF-Z
C 767	141P144O20	CHIP CAPACITOR	F16V 0.1μF-Z
C 769	141P140O50	CHIP CAPACITOR	B50V 470pF-K
C 770	141P140O50	CHIP CAPACITOR	B50V 470pF-K
C 771	141P140O50	CHIP CAPACITOR	B50V 470pF-K
C 772	141P140O50	CHIP CAPACITOR	B50V 470pF-K
C 777	141P140O50	CHIP CAPACITOR	B50V 470pF-K
C 778	141P140O50	CHIP CAPACITOR	B50V 470pF-K
C 779	141P140O50	CHIP CAPACITOR	B50V 470pF-K
C 780	141P140O50	CHIP CAPACITOR	B50V 470pF-K
C 781	141P140O50	CHIP CAPACITOR	B50V 470pF-K
C 782	141P140O50	CHIP CAPACITOR	B50V 470pF-K
C 783	141P140O50	CHIP CAPACITOR	B50V 470pF-K
C 784	141P140O50	CHIP CAPACITOR	B50V 470pF-K
C 785	141P140O50	CHIP CAPACITOR	B50V 470pF-K
C 786	141P140O50	CHIP CAPACITOR	B50V 470pF-K

COMMON USE

SYMBOL No.	PARTS No.	PARTS NAME	DESCRIPTION
C 787	141P144O60	CHIP CAPACITOR	F16/10V 1µF-Z
C 788	141P140O50	CHIP CAPACITOR	B50V 470pF-K
C 789	141P140O50	CHIP CAPACITOR	B50V 470pF-K
C 792	141P140O50	CHIP CAPACITOR	B50V 470pF-K
C 793	141P140O50	CHIP CAPACITOR	B50V 470pF-K
C 796	141P140O50	CHIP CAPACITOR	B50V 470pF-K
C 797	141P140O50	CHIP CAPACITOR	B50V 470pF-K
C 799	141P140O50	CHIP CAPACITOR	B50V 470pF-K
C 7A0	141P144O20	CHIP CAPACITOR	F16V 0.1µF-Z
C 7A2	141P144O20	CHIP CAPACITOR	F16V 0.1µF-Z
C 7A3	141P140O90	CHIP CAPACITOR	B50V 1000pF-K
C 7A4	141P144O20	CHIP CAPACITOR	F16V 0.1µF-Z
C 7A7	141P144O20	CHIP CAPACITOR	F16V 0.1µF-Z
C 7A8	141P144O20	CHIP CAPACITOR	F16V 0.1µF-Z
C 7B0	141P144O20	CHIP CAPACITOR	F16V 0.1µF-Z
C 7B2	141P144O20	CHIP CAPACITOR	F16V 0.1µF-Z
C 7B4	141P144O20	CHIP CAPACITOR	F16V 0.1µF-Z
C 7C0	141P144O20	CHIP CAPACITOR	F16V 0.1µF-Z
C 7C3	141P144O20	CHIP CAPACITOR	F16V 0.1µF-Z
C 7C5	141P144O20	CHIP CAPACITOR	F16V 0.1µF-Z
C 7C6	141P144O20	CHIP CAPACITOR	F16V 0.1µF-Z
C 7C9	141P144O20	CHIP CAPACITOR	F16V 0.1µF-Z
C 7D0	141P144O20	CHIP CAPACITOR	F16V 0.1µF-Z
C 7D1	141P144O20	CHIP CAPACITOR	F16V 0.1µF-Z
C 7D3	141P144O20	CHIP CAPACITOR	F16V 0.1µF-Z
C 7D7	141P144O20	CHIP CAPACITOR	F16V 0.1µF-Z
C 7D8	181P522O30	CHIP ELE CAPACITOR	16V 10µF-M
C 7D9	141P139O70	CHIP CAPACITOR	B16V 0.22µF-K
C 7E0	141P144O20	CHIP CAPACITOR	F16V 0.1µF-Z
C 7E1	141P144O20	CHIP CAPACITOR	F16V 0.1µF-Z
C 7E2	141P144O20	CHIP CAPACITOR	F16V 0.1µF-Z
C 7E3	141P144O20	CHIP CAPACITOR	F16V 0.1µF-Z
C 7E4	141P144O20	CHIP CAPACITOR	F16V 0.1µF-Z
C 7E5	141P144O20	CHIP CAPACITOR	F16V 0.1µF-Z
C 7E6	141P144O20	CHIP CAPACITOR	F16V 0.1µF-Z
C 7E7	141P144O20	CHIP CAPACITOR	F16V 0.1µF-Z
C 7E8	141P144O20	CHIP CAPACITOR	F16V 0.1µF-Z
C 7E9	141P144O20	CHIP CAPACITOR	F16V 0.1µF-Z
C 7F0	141P144O20	CHIP CAPACITOR	F16V 0.1µF-Z
C 7F1	141P144O20	CHIP CAPACITOR	F16V 0.1µF-Z
C 7F2	141P144O20	CHIP CAPACITOR	F16V 0.1µF-Z
C 7F3	141P144O20	CHIP CAPACITOR	F16V 0.1µF-Z
C 7F4	141P144O20	CHIP CAPACITOR	F16V 0.1µF-Z
C 7F5	141P144O20	CHIP CAPACITOR	F16V 0.1µF-Z
C 7F8	141P144O20	CHIP CAPACITOR	F16V 0.1µF-Z
C 7F9	141P144O20	CHIP CAPACITOR	F16V 0.1µF-Z
C 7G0	141P144O20	CHIP CAPACITOR	F16V 0.1µF-Z
C 7G2	141P144O20	CHIP CAPACITOR	F16V 0.1µF-Z
C 7G3	141P144O20	CHIP CAPACITOR	F16V 0.1µF-Z
C 7G4	141P144O20	CHIP CAPACITOR	F16V 0.1µF-Z
C 7G5	141P144O20	CHIP CAPACITOR	F16V 0.1µF-Z
C 7G6	141P144O20	CHIP CAPACITOR	F16V 0.1µF-Z
C 7G7	141P144O20	CHIP CAPACITOR	F16V 0.1µF-Z
C 7G8	141P144O20	CHIP CAPACITOR	F16V 0.1µF-Z
C 7G9	141P144O20	CHIP CAPACITOR	F16V 0.1µF-Z
C 7H0	141P144O20	CHIP CAPACITOR	F16V 0.1µF-Z
C 7H1	141P144O20	CHIP CAPACITOR	F16V 0.1µF-Z

SYMBOL No.	PARTS No.	PARTS NAME	DESCRIPTION
C 7H2	141P144O20	CHIP CAPACITOR	F16V 0.1µF-Z
C 7H3	141P144O20	CHIP CAPACITOR	F16V 0.1µF-Z
C 7H4	141P144O20	CHIP CAPACITOR	F16V 0.1µF-Z
C 7H5	141P144O20	CHIP CAPACITOR	F16V 0.1µF-Z
C 7H6	141P144O20	CHIP CAPACITOR	F16V 0.1µF-Z
C 7H7	141P144O20	CHIP CAPACITOR	F16V 0.1µF-Z
C 7H8	141P144O20	CHIP CAPACITOR	F16V 0.1µF-Z
C 7H9	141P144O20	CHIP CAPACITOR	F16V 0.1µF-Z
C 7J0	141P144O20	CHIP CAPACITOR	F16V 0.1µF-Z
C 7J1	141P144O20	CHIP CAPACITOR	F16V 0.1µF-Z
C 7J2	141P144O20	CHIP CAPACITOR	F16V 0.1µF-Z
C 7J3	141P144O20	CHIP CAPACITOR	F16V 0.1µF-Z
C 7J4	141P144O20	CHIP CAPACITOR	F16V 0.1µF-Z
C 7J5	141P144O20	CHIP CAPACITOR	F16V 0.1µF-Z
C 7J6	141P144O20	CHIP CAPACITOR	F16V 0.1µF-Z
C 7J7	141P144O20	CHIP CAPACITOR	F16V 0.1µF-Z
C 7J8	141P144O20	CHIP CAPACITOR	F16V 0.1µF-Z
C 7J9	141P144O20	CHIP CAPACITOR	F16V 0.1µF-Z
C 7K0	181P522O30	CHIP ELE CAPACITOR	16V 10µF-M
C 7K1	181P522O30	CHIP ELE CAPACITOR	16V 10µF-M
C 7K2	181P520O10	CHIP ELE CAPACITOR	6.3V 22µF-M
C 7K3	141P144O20	CHIP CAPACITOR	F16V 0.1µF-Z
C 7K4	141P144O20	CHIP CAPACITOR	F16V 0.1µF-Z
C 7K5	141P144O20	CHIP CAPACITOR	F16V 0.1µF-Z
C 7K6	141P144O20	CHIP CAPACITOR	F16V 0.1µF-Z
C 7K8	141P144O20	CHIP CAPACITOR	F16V 0.1µF-Z
C 7K9	141P144O20	CHIP CAPACITOR	F16V 0.1µF-Z
C 7L0	141P144O20	CHIP CAPACITOR	F16V 0.1µF-Z
C 7L1	141P144O20	CHIP CAPACITOR	F16V 0.1µF-Z
C 7L2	141P144O20	CHIP CAPACITOR	F16V 0.1µF-Z
C 7L3	141P144O20	CHIP CAPACITOR	F16V 0.1µF-Z
C 7L4	141P144O20	CHIP CAPACITOR	F16V 0.1µF-Z
C 7L5	141P144O20	CHIP CAPACITOR	F16V 0.1µF-Z
C 7L6	141P144O20	CHIP CAPACITOR	F16V 0.1µF-Z
C 7L7	141P144O20	CHIP CAPACITOR	F16V 0.1µF-Z
C 7L8	181P522O30	CHIP ELE CAPACITOR	16V 10µF-M
C 7L9	181P522O30	CHIP ELE CAPACITOR	16V 10µF-M
C 7M0	141P144O20	CHIP CAPACITOR	F16V 0.1µF-Z
C 7M1	141P144O20	CHIP CAPACITOR	F16V 0.1µF-Z
C 7X1	141P140O50	CHIP CAPACITOR	B50V 470pF-K
C 7X2	141P140O50	CHIP CAPACITOR	B50V 470pF-K
C 7X3	141P140O50	CHIP CAPACITOR	B50V 470pF-K
C 7X4	141P140O50	CHIP CAPACITOR	B50V 470pF-K
C 7X9	141P144O20	CHIP CAPACITOR	F16V 0.1µF-Z
C 7Y0	141P144O20	CHIP CAPACITOR	F16V 0.1µF-Z
C 7Y1	141P144O20	CHIP CAPACITOR	F16V 0.1µF-Z
C 7Y2	141P144O20	CHIP CAPACITOR	F16V 0.1µF-Z
C 7Y3	141P144O20	CHIP CAPACITOR	F16V 0.1µF-Z
C 7Y4	141P144O20	CHIP CAPACITOR	F16V 0.1µF-Z
C 7Y5	141P144O20	CHIP CAPACITOR	F16V 0.1µF-Z
C 7Y6	141P144O20	CHIP CAPACITOR	F16V 0.1µF-Z
C 7Y7	141P144O20	CHIP CAPACITOR	F16V 0.1µF-Z
C 7Z0	141P144O60	CHIP CAPACITOR	F16/10V 1µF-Z
C 7Z1	141P144O60	CHIP CAPACITOR	F16/10V 1µF-Z
C 7Z2	141P144O60	CHIP CAPACITOR	F16/10V 1µF-Z
C 7Z3	141P144O60	CHIP CAPACITOR	F16/10V 1µF-Z
C 800	141P144O20	CHIP CAPACITOR	F16V 0.1µF-Z

COMMON USE

SYMBOL No.	PARTS No.	PARTS NAME	DESCRIPTION
C 801	141P144O20	CHIP CAPACITOR	F16V 0.1μF-Z
C 802	141P144O20	CHIP CAPACITOR	F16V 0.1μF-Z
C 803	141P144O20	CHIP CAPACITOR	F16V 0.1μF-Z
C 804	141P144O60	CHIP CAPACITOR	F16/10V 1μF-Z
C 805	141P144O20	CHIP CAPACITOR	F16V 0.1μF-Z
C 806	141P136O90	CHIP CAPACITOR	F25V 1μF-Z
C 812	141P136O90	CHIP CAPACITOR	F25V 1μF-Z
C 819	141P136O90	CHIP CAPACITOR	F25V 1μF-Z
C 827	181P520O80	CHIP ELE CAPACITOR	10V 33μF-M
C 828	181P523O90	CHIP ELE CAPACITOR	25V 33μF-M
C 829	141P136O90	CHIP CAPACITOR	F25V 1μF-Z
C 830	141P144O60	CHIP CAPACITOR	F16/10V 1μF-Z
C 831	154P340O60	CHIP CAPACITOR	CH50V 5pF-C
C 833	141P144O60	CHIP CAPACITOR	F16/10V 1μF-Z
C 834	141P144O20	CHIP CAPACITOR	F16V 0.1μF-Z
C 835	141P144O20	CHIP CAPACITOR	F16V 0.1μF-Z
C 836	154P340O10	CHIP CAPACITOR	CK50V 1pF-C
C 837	154P340O10	CHIP CAPACITOR	CK50V 1pF-C
C 838	141P144O20	CHIP CAPACITOR	F16V 0.1μF-Z
C 839	141P144O20	CHIP CAPACITOR	F16V 0.1μF-Z
C 840	181P522O40	CHIP ELE CAPACITOR	16V 22μF-M
C 8A0	141P144O20	CHIP CAPACITOR	F16V 0.1μF-Z
C 8A1	141P144O20	CHIP CAPACITOR	F16V 0.1μF-Z
C 8A2	141P144O20	CHIP CAPACITOR	F16V 0.1μF-Z
C 8A3	141P144O20	CHIP CAPACITOR	F16V 0.1μF-Z
C 8A4	141P144O60	CHIP CAPACITOR	F16/10V 1μF-Z
C 8A5	141P144O20	CHIP CAPACITOR	F16V 0.1μF-Z
C 8A6	141P136O90	CHIP CAPACITOR	F25V 1μF-Z
C 8B2	141P136O90	CHIP CAPACITOR	F25V 1μF-Z
C 8B9	141P136O90	CHIP CAPACITOR	F25V 1μF-Z
C 8C7	181P520O80	CHIP ELE CAPACITOR	10V 33μF-M
C 8C8	181P523O90	CHIP ELE CAPACITOR	25V 33μF-M
C 8C9	141P136O90	CHIP CAPACITOR	F25V 1μF-Z
C 8D0	141P144O60	CHIP CAPACITOR	F16/10V 1μF-Z
C 8D1	154P340O60	CHIP CAPACITOR	CH50V 5pF-C
C 8D3	141P144O60	CHIP CAPACITOR	F16/10V 1μF-Z
C 8D4	141P144O20	CHIP CAPACITOR	F16V 0.1μF-Z
C 8D5	141P144O20	CHIP CAPACITOR	F16V 0.1μF-Z
C 8D6	154P340O10	CHIP CAPACITOR	CK50V 1pF-C
C 8D7	154P340O10	CHIP CAPACITOR	CK50V 1pF-C
C 8D8	141P144O20	CHIP CAPACITOR	F16V 0.1μF-Z
C 8D9	141P144O20	CHIP CAPACITOR	F16V 0.1μF-Z
C 8E0	181P522O40	CHIP ELE CAPACITOR	16V 22μF-M
C 8M0	141P144O20	CHIP CAPACITOR	F16V 0.1μF-Z
C 8M1	141P144O20	CHIP CAPACITOR	F16V 0.1μF-Z
C 8M2	141P144O20	CHIP CAPACITOR	F16V 0.1μF-Z
C 8M3	141P144O20	CHIP CAPACITOR	F16V 0.1μF-Z
C 8M4	141P144O60	CHIP CAPACITOR	F16/10V 1μF-Z
C 8M5	141P144O20	CHIP CAPACITOR	F16V 0.1μF-Z
C 8M6	141P136O90	CHIP CAPACITOR	F25V 1μF-Z
C 8N2	141P136O90	CHIP CAPACITOR	F25V 1μF-Z
C 8N9	141P136O90	CHIP CAPACITOR	F25V 1μF-Z
C 8P7	181P520O80	CHIP ELE CAPACITOR	10V 33μF-M
C 8P8	181P523O90	CHIP ELE CAPACITOR	25V 33μF-M
C 8P9	141P136O90	CHIP CAPACITOR	F25V 1μF-Z
C 8Q0	141P144O60	CHIP CAPACITOR	F16/10V 1μF-Z

SYMBOL No.	PARTS No.	PARTS NAME	DESCRIPTION
C 8Q1	154P340O60	CHIP CAPACITOR	CH50V 5pF-C
C 8Q3	141P144O60	CHIP CAPACITOR	F16/10V 1μF-Z
C 8Q4	141P144O20	CHIP CAPACITOR	F16V 0.1μF-Z
C 8Q5	154P340O10	CHIP CAPACITOR	CK50V 1pF-C
C 8Q6	154P340O10	CHIP CAPACITOR	CK50V 1pF-C
C 8Q7	141P144O20	CHIP CAPACITOR	F16V 0.1μF-Z
C 8Q8	141P144O20	CHIP CAPACITOR	F16V 0.1μF-Z
C 8Q9	181P522O40	CHIP ELE CAPACITOR	16V 22μF-M
C 8R0	181P520O10	CHIP ELE CAPACITOR	6.3V 22μF-M
C 8R1	181P520O10	CHIP ELE CAPACITOR	6.3V 22μF-M
C 8R2	181P520O10	CHIP ELE CAPACITOR	6.3V 22μF-M
C 8S0	181P522O40	CHIP ELE CAPACITOR	16V 22μF-M
⚠ C 900	189P185O90	AC CERAMIC CAPACITOR	AC250V E2200pF-M
⚠ C 901	189P185O90	AC CERAMIC CAPACITOR	AC250V E2200pF-M
C 903	185D127O60	ELECTROLYTIC C	H450V 330μF-M
C 904	185D127O60	ELECTROLYTIC C	H450V 330μF-M
C 905	181P525O00	CHIP ELE CAPACITOR	04W 35V 10μF-F
C 908	141P135O10	CHIP CAPACITOR	F25V 0.33μF-Z
C 909	141P135O10	CHIP CAPACITOR	F25V 0.33μF-Z
C 912	141P133O80	CHIP CAPACITOR	F50V 0.01μF-Z
C 951	154P336O70	CHIP CAPACITOR	CH50V/25V 680pF-J
C 952	141P134O10	CHIP CAPACITOR	F50V 0.047μF-Z
C 962	141P139O30	CHIP CAPACITOR	B25V 0.1μF-K
C 974	141P133O80	CHIP CAPACITOR	F50V 0.01μF-Z
C 9A3	141P135O80	CHIP CAPACITOR	F25V 0.1μF-Z
C 9A4	141P135O80	CHIP CAPACITOR	F25V 0.1μF-Z
C 9A9	141P135O80	CHIP CAPACITOR	F25V 0.1μF-Z
C 9B0	141P135O80	CHIP CAPACITOR	F25V 0.1μF-Z
C 9B5	141P135O80	CHIP CAPACITOR	F25V 0.1μF-Z
C 9B6	141P135O80	CHIP CAPACITOR	F25V 0.1μF-Z
C 9C1	141P135O80	CHIP CAPACITOR	F25V 0.1μF-Z
C 9C2	141P135O80	CHIP CAPACITOR	F25V 0.1μF-Z
C 9C4	141P135O70	CHIP CAPACITOR	F16V 1μF-Z
C 9C5	154P336O90	CHIP CAPACITOR	CH50V/25V 1000pF-J
C 9C6	141P135O80	CHIP CAPACITOR	F25V 0.1μF-Z
C 9D1	141P135O80	CHIP CAPACITOR	F25V 0.1μF-Z
C 9D2	141P135O80	CHIP CAPACITOR	F25V 0.1μF-Z
C 9D4	141P135O80	CHIP CAPACITOR	F25V 0.1μF-Z
C 9D6	141P135O80	CHIP CAPACITOR	F25V 0.1μF-Z
C 9D8	141P135O80	CHIP CAPACITOR	F25V 0.1μF-Z
C 9E0	141P135O80	CHIP CAPACITOR	F25V 0.1μF-Z
C 9E4	141P133O80	CHIP CAPACITOR	F50V 0.01μF-Z
C 9E5	141P135O80	CHIP CAPACITOR	F25V 0.1μF-Z
C 9E6	141P135O80	CHIP CAPACITOR	F25V 0.1μF-Z
C 9E8	141P133O80	CHIP CAPACITOR	F50V 0.01μF-Z
C 9E9	141P133O80	CHIP CAPACITOR	F50V 0.01μF-Z
⚠ C 9F0	189P186O20	AC CERAMIC CAPACITOR	AC250V E4700pF-M
⚠ C 9F1	189P183O70	C-M-P-AC	AC125V 0.33μF-M
⚠ C 9F2	189P183O80	C-M-P-AC	AC125/250V 0.47M
⚠ C 9F3	189P183O70	C-M-P-AC	AC125V 0.33μF-M
⚠ C 9F4	189P186O20	AC CERAMIC CAPACITOR	AC250V E4700pF-M
⚠ C 9F5	189P186O20	AC CERAMIC CAPACITOR	AC250V E4700pF-M
⚠ C 9F7	189P183O40	C-M-P-AC	125V/250V0.1μF-M
⚠ C 9F8	189P186O20	AC CERAMIC CAPACITOR	AC250V E4700pF-M
⚠ C 9F9	189P186O20	AC CERAMIC CAPACITOR	AC250V E4700pF-M
C 9M0	154P333O10	CHIP CAPACITOR	CH50V 68pF-J
C 9M1	154P339O30	CHIP CAPACITOR	CH50V 2200pF-J

COMMON USE

SYMBOL No.	PARTS No.	PARTS NAME	DESCRIPTION
C 9M2	141P139O30	CHIP CAPACITOR	B25V 0.1µF-K
C 9M3	141P135O80	CHIP CAPACITOR	F25V 0.1µF-Z
C 9M4	141P134O70	CHIP CAPACITOR	B16V 1µF-K
C 9M5	141P133O80	CHIP CAPACITOR	F50V 0.01µF-Z
C 9M6	141P139O30	CHIP CAPACITOR	B25V 0.1µF-K
C 9M7	154P335O10	CHIP CAPACITOR	CH50V 470pF-J
C 9M8	154P335O10	CHIP CAPACITOR	CH50V 470pF-J
C 9S1	141P133O80	CHIP CAPACITOR	F50V 0.01µF-Z
C 9S3	141P133O80	CHIP CAPACITOR	F50V 0.01µF-Z
C 9S4	141P133O80	CHIP CAPACITOR	F50V 0.01µF-Z
C 9S6	141P133O80	CHIP CAPACITOR	F50V 0.01µF-Z
C 9W3	141P134O10	CHIP CAPACITOR	F50V 0.047µF-Z
C 9W4	141P135O80	CHIP CAPACITOR	F25V 0.1µF-Z
C 9W6	141P133O80	CHIP CAPACITOR	F50V 0.01µF-Z
C 9X0	141P134O70	CHIP CAPACITOR	B16V 1µF-K
C 9X2	154P336O70	CHIP CAPACITOR	CH50V/25V 680pF-J
C 9X3	141P134O70	CHIP CAPACITOR	B16V 1µF-K
C 9X4	141P133O80	CHIP CAPACITOR	F50V 0.01µF-Z
C 9X5	141P135O80	CHIP CAPACITOR	F25V 0.1µF-Z
C 9X6	141P135O80	CHIP CAPACITOR	F25V 0.1µF-Z
C 9X7	154P335O10	CHIP CAPACITOR	CH50V 470pF-J
C 9X8	141P135O10	CHIP CAPACITOR	F25V 0.33µF-Z
C 9X9	141P133O80	CHIP CAPACITOR	F50V 0.01µF-Z
C 9Y0	141P135O80	CHIP CAPACITOR	F25V 0.1µF-Z
C 9Y1	141P133O80	CHIP CAPACITOR	F50V 0.01µF-Z
C 9Y2	141P135O80	CHIP CAPACITOR	F25V 0.1µF-Z
C 9Y3	141P135O80	CHIP CAPACITOR	F25V 0.1µF-Z
C 9Z3	141P133O80	CHIP CAPACITOR	F50V 0.01µF-Z
C 9Z4	141P133O80	CHIP CAPACITOR	F50V 0.01µF-Z
		SWITCHES	
⚠	433C026O20	SEESAW SWITCH	MAIN POWER SW SDDJE3
	439C043O60	MEMBRANE SWITCH	CONTROL SW
S 9E1	434P002O10	LEVER SWITCH	FILTER COVER SENSOR SW
S 9W1	434P002O10	LEVER SWITCH	TOP COVER SENSOR SW
		MISCELLANEOUS	
	499B014O10	LCD BLOCK	
	955A023O03	POWER ASSY	
	288P160O30	COOLING FAN	MMF-06E12DH-RC1
	288P169O40	COOLING FAN	MMF-12B12DM-RA4
	268P050O40	PHOTO COUPLER	
⚠	299P222O10	PROTECTOR	FUSE
	480P036O10	SPEAKER	
	939P747O10	PREAMP UNIT	
⚠AG9F1	224D019O10	AIR GAP	1.5KV+COVER
⚠F 9F1	283D106O90	FUSE	S10A
J 208	451C104O10	HEADPHONE JACK	BLACK
J 209	451C104O10	HEADPHONE JACK	BLACK
⚠J 901	451D081O20	POWER JACK	3P
⚠K 900	287P097O10	RELAY	VS-24MB-NR-SM2
PC950	268P050O10	PHOTO COUPLER	TLP621(GB-LF2)
⚠PC951	268P050O10	PHOTO COUPLER	TLP621(GB-LF2)
⚠PC9V0	268P050O10	PHOTO COUPLER	TLP621(GB-LF2)
⚠PC9V1	268P050O10	PHOTO COUPLER	TLP621(GB-LF2)
⚠RV9F1	265P100O30	VARISTOR	ERZV10D511
X 2A0	285P131O40	CRYSTAL RESONATOR	3.58MHz

SYMBOL No.	PARTS No.	PARTS NAME	DESCRIPTION
X 2A1	285P132O40	CRYSTAL RESONATOR	4.43MHz
X 2A2	285P365O10	CRYSTAL RESONATOR	3.58MHz
X 2A3	285P364O10	CRYSTAL RESONATOR	3.58MHz
X 400	285P335O10	CRYSTAL RESONATOR	64.0MHz
⚠Z 950	299P194O20	THERMOSTAT	67L100-S
Z 963	299P238O10	CURRENT PROTECTOR	FUSE 2.5A
Z 965	299P238O10	CURRENT PROTECTOR	FUSE 2.5A
Z 966	299P239O80	CURRENT PROTECTOR	FUSE 3.15A
Z 967	299P239O80	CURRENT PROTECTOR	FUSE 3.15A
Z 968	299P239O80	CURRENT PROTECTOR	FUSE 3.15A
Z 969	299P239O80	CURRENT PROTECTOR	FUSE 3.15A
⚠Z 9V0	299P194O30	THERMOSTAT	67L110-S
		PRINTED CIRCUIT BOARD ASSY'S	
⚠	935B240O03	DECODER PCB ASSY	
⚠	935D430O01	FBOX PCB ASSY	
⚠	935B243O01	FILTER PCB ASSY	
⚠	935D429O03	INLET PCB ASSY	
⚠	935B244O01	LAMP POWER PCB ASSY	
⚠	935D431O01	LBOX PCB ASSY	
⚠	935D437O01	LP CONT PCB ASSY	
⚠	935A084O01	MAIN PCB ASSY	
⚠	935D432O01	MOTOR PCB ASSY	
⚠	935B237O01	PCCARD PCB ASSY	
⚠	935B241O01	POWER PCB ASSY	
⚠	935B242O01	POWER SUB PCB ASSY	
⚠	935D434O01	POWER SUB 2 PCB ASSY	
⚠	935B245O01	TERMINAL PCB ASSY	
		MECHANICAL PARTS	
	499B016O10	FIELD LENS BLOCK	
	499B017O10	LENS GEAR ASSY	
	685D032O20	RETAINING RING	ETW-3
	631D794O10	SCREW	SUS 304-BD
	669D199O80	SCREW	M3X8-0.5
	669D245O10	SCREW	M4X0.7-8
	669D171O70	SCREW	M3X20-0.5
	669D204O90	SCREW	M2.6X6
	669D220O10	SCREW	3X6 46LA005
	669D220O40	SCREW	3X12 46LA005
	669D221O20	SCREW	4X8 46LA005
	669D221O60	SCREW	4X16 46LA005
	669D212O20	SCREW	3X8 83AF
		COSMETIC PARTS	
	771B087O10	ADJUSTER	
	499B018O10	ITG ASSY 1	
	499B018O20	ITG ASSY 2	
⚠	499B019O10	LAMP BOX ASSY	
	499B013O10	LENS UNIT	
	975D101O70	TOP COVER ASSY	
	761B338O10	ADJSTER BASE	
	761C631O10	ADJUSTER CAM	
	761C643O30	LENS CAP	
	750A332O30	BOTTOM CASE	
	750A331O30	TOP CASE	

COMMON USE

SYMBOL No.	PARTS No.	PARTS NAME	DESCRIPTION
	752B038O40	FILTER COVER	
	761C637O10	TERMINAL COVER	
	702C955O00	DOOR	
	640C178O10	FILTER	
	640C178O20	FILTER	
	709D082O30	HANDLE	
	761C630O10	ADJUSTER LOCK	
	761C630O20	ADJUSTER LOCK	
	499B015O30	POLARIZER B	
	499B005O20	POLARIZER G	
	499B005O10	POLARIZER R	
	572D968O10	ADJUSTER SPRING	
	761B320O70	TERMINAL BOARD	
	750A330O30	FRONT CASE UNIT	
	PACKING PARTS AND ACCESSORY		
1	803A529O10	PACKING CUSHION B	
2	803A530O10	PACKING CUSHION T	
3	802D277O10	PACKING SHEET	
4	831D330O10	PACKING SHEET	
5	831D190O10	PACKING SHEET	900X900
6	802B685O50	PACKING CASE	
7	831D181O20	PACKING BAG	375X250 0.06T
⚠ 8	246C346O20	AC POWER CORD	
9	246C319O20	MAC ADAPTER	
10	452D173O10	BNC RCA CONNECTOR	
11	246C318O10	CABLE	RGB(15P)
12	246C320O10	CABLE	RS232C(9P)
13	246C321O10	CABLE	PC(9P)-MAC(8P)
14	871D219O60	INSTRUCTION BOOK	
15	939P746O10	REMOTE HAND UNIT	

SYMBOL No.	PARTS No.	PARTS NAME	DESCRIPTION

COMMON USE

IC-BLOCK DIAGRAMS

PCB-TERMINAL

IC200,201 BA7657F

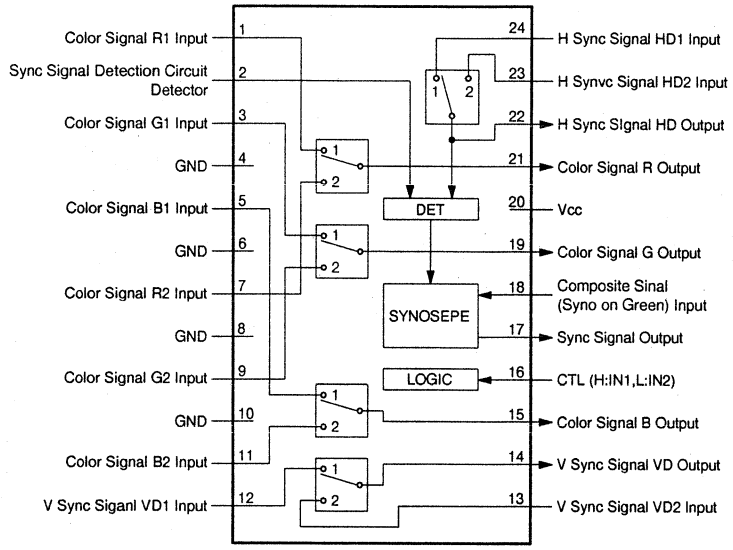

IC210 AD8180AR

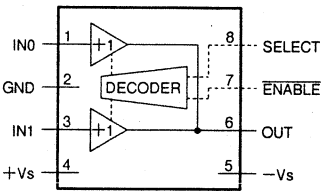

IC211 AD8182AR

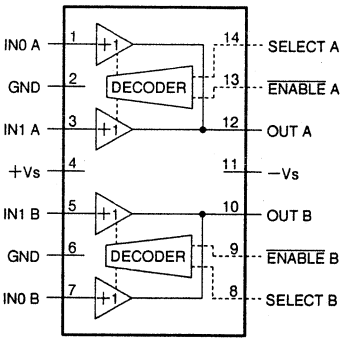

IC220 AD8073JR

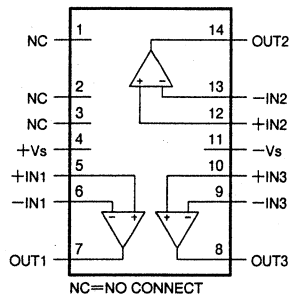

NC=NO CONNECT

IC250 M52055FP

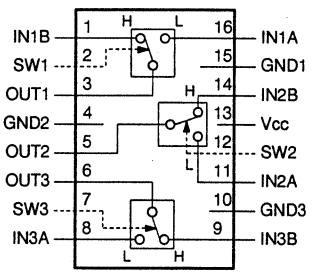

IC300 74VHC4052M

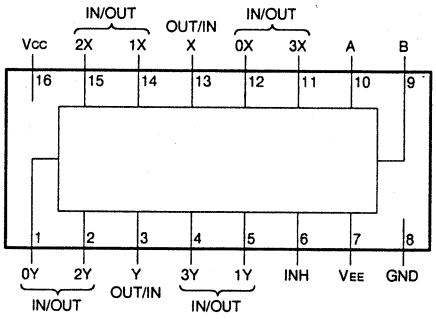

*TRUTH TABLE

Inputs			"ON" Channels	
INH	B	A	X	Y
H	X	X	None	None
L	L	L	0X	0Y
L	L	H	1X	1Y
L	H	L	2X	2Y
L	H	H	3X	3Y

IC260 74VHC153M

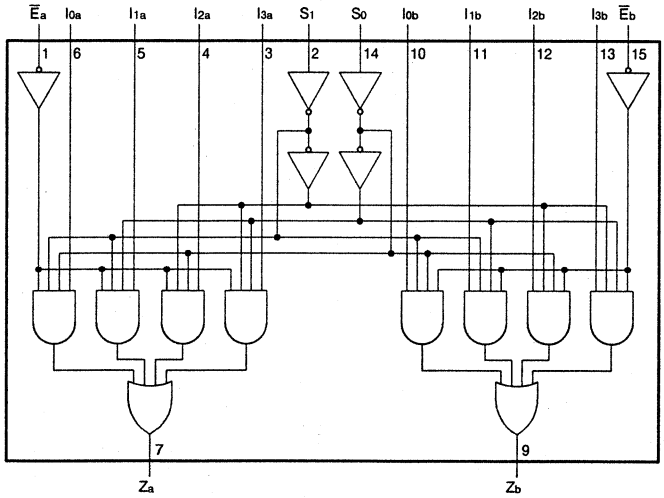

TRUTH TABLE

Select Inputs		Inputs (a or b)					Outputs
S_0	S_1	$\bar{E}$	I_0	I_1	I_2	I_3	Z
X	X	H	X	X	X	X	L
L	L	L	L	X	X	X	L
L	L	L	H	X	X	X	H
H	L	L	X	L	X	X	L
H	L	L	X	H	X	X	H
L	H	L	X	X	L	X	L
L	H	L	X	X	H	X	H
H	H	L	X	X	X	L	L
H	H	L	X	X	X	H	H

H = HIGH Voltage Level
L = LOW Voltage Level
X = Immaterial

COMMON USE

PCB-MAIN (1/8)

IC5R2 TL431CPS

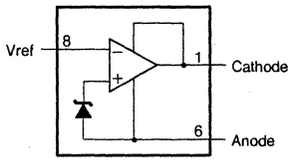

IC5R3 M62358FP

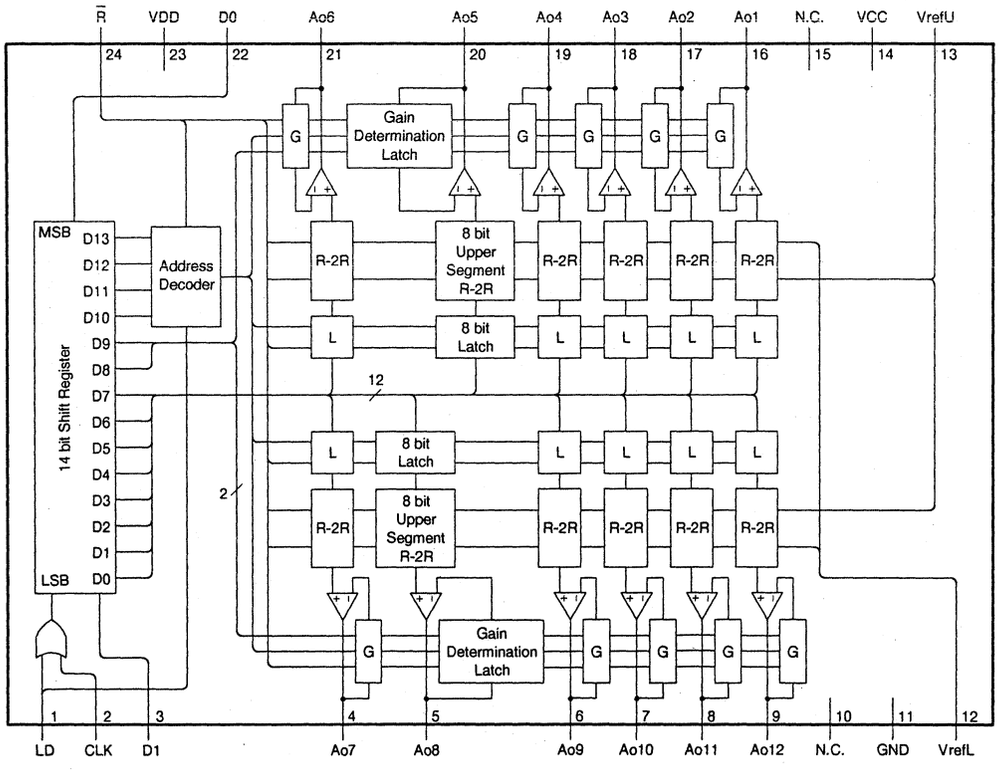

IC801,802,803 AD8026AR

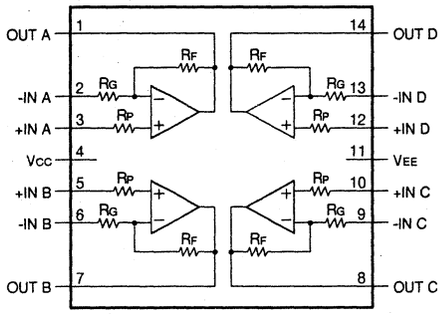

IC806 OP467GS

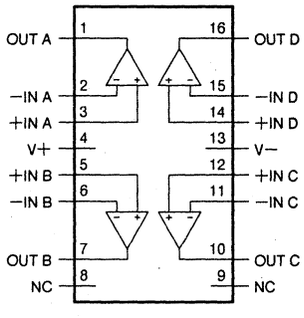

IC807,809 MC74HC4066F

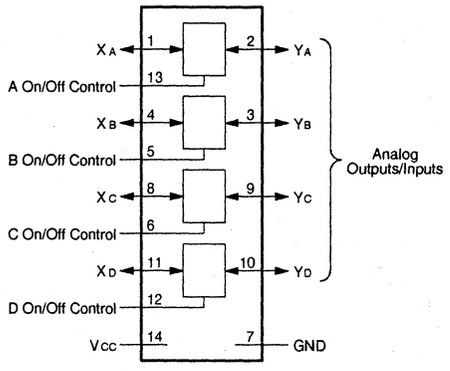

XA, XB, XC, XD = Analog Inputs/Outputs

TRUTH TABLE

On/Off Control Input	State of Analog Switch
L	OFF
H	ON

COMMON USE

IC800 H8L7308D

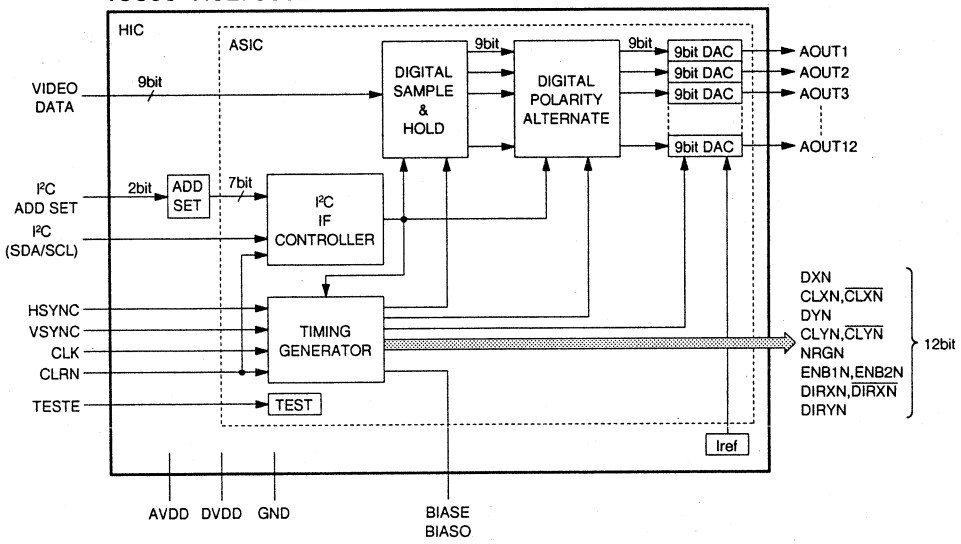

Pin No.	Signal Name	Pin No.	Signal Name	Pin No.	Signal Name	Pin No.	Signal Name	Pin No.	Signal Name
1	DVSS	13	CLYN	25	AOUT11	37	AOUT4	49	DI2
2	BIASO	14	$\overline{\text{CLYN}}$	26	AOUT12	38	AOUT5	50	DI1
3	BIASE	15	DXN	27	AVDD	39	AOUT6	51	DI0
4	DIRXN	16	CLXN	28	AVSS	40	AVSS	52	VSYNC
5	$\overline{\text{DIRXN}}$	17	$\overline{\text{CLXN}}$	29	ADR0	41	DVDD	53	HSYNC
6	ENB1N	18	DVSS	30	ADR1	42	DVSS	54	CLRN
7	ENB2N	19	DVDD	31	N.C.	43	DI8	55	SDA
8	DVSS	20	AVSS	32	AVSS	44	DI7	56	SCL
9	DVDD	21	AOUT7	33	AVDD	45	DI6	57	DVDD
10	NRGN	22	AOUT8	34	AOUT1	46	DI5	58	TESTE
11	DIRYN	23	AOUT9	35	AOUT2	47	DI4	59	CLK
12	DYN	24	AOUT10	36	AOUT3	48	DI3	60	DVSS
								61	DVDD

PCB-MAIN (2/8)

IC8A0,8M0 H8L7308D

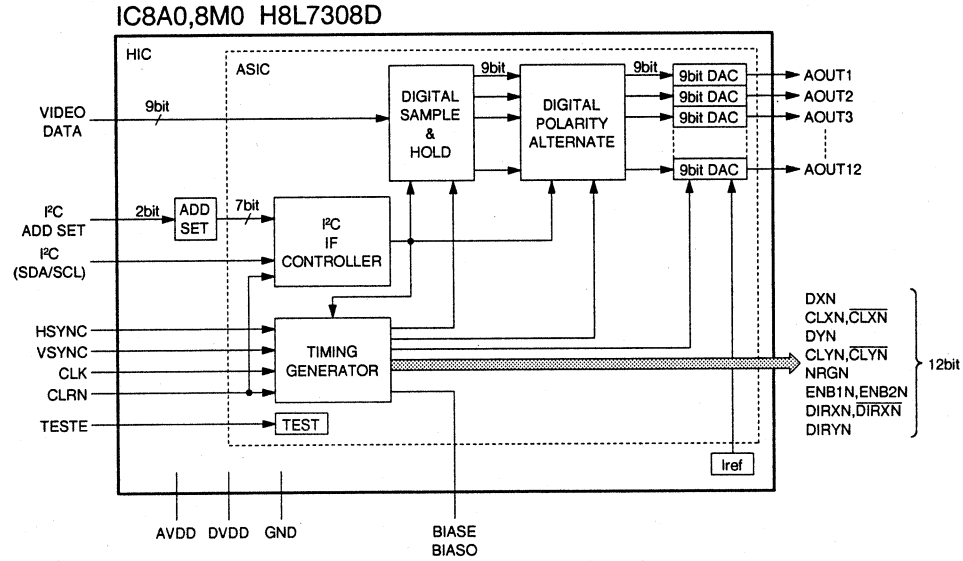

Pin No.	Signal Name	Pin No.	Signal Name	Pin No.	Signal Name	Pin No.	Signal Name	Pin No.	Signal Name
1	DVSS	13	CLYN	25	AOUT11	37	AOUT4	49	DI2
2	BIASO	14	$\overline{\text{CLYN}}$	26	AOUT12	38	AOUT5	50	DI1
3	BIASE	15	DXN	27	AVDD	39	AOUT6	51	DI0
4	DIRXN	16	CLXN	28	AVSS	40	AVSS	52	VSYNC
5	$\overline{\text{DIRXN}}$	17	$\overline{\text{CLXN}}$	29	ADR0	41	DVDD	53	HSYNC
6	ENB1N	18	DVSS	30	ADR1	42	DVSS	54	CLRN
7	ENB2N	19	DVDD	31	N.C.	43	DI8	55	SDA
8	DVSS	20	AVSS	32	AVSS	44	DI7	56	SCL
9	DVDD	21	AOUT7	33	AVDD	45	DI6	57	DVDD
10	NRGN	22	AOUT8	34	AOUT1	46	DI5	58	TESTE
11	DIRYN	23	AOUT9	35	AOUT2	47	DI4	59	CLK
12	DYN	24	AOUT10	36	AOUT3	48	DI3	60	DVSS
								61	DVDD

COMMON USE

IC810,8B0 MC74HC04AF

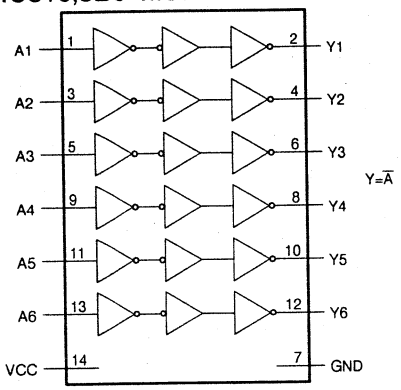

IC8A1,8A2,8A3,8M1,8M2,8M3 AD8026AR

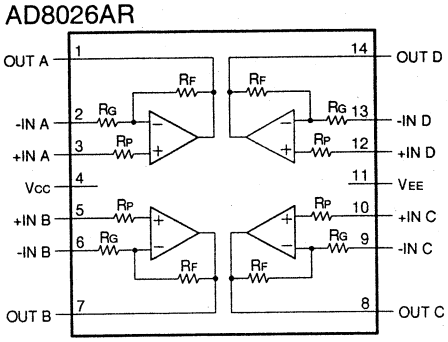

IC8A6,8M6 OP467GS

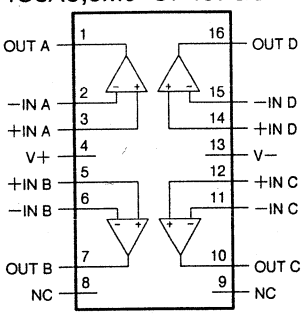

IC8A7,8A9,8M7,8M9 MC74HC4066F

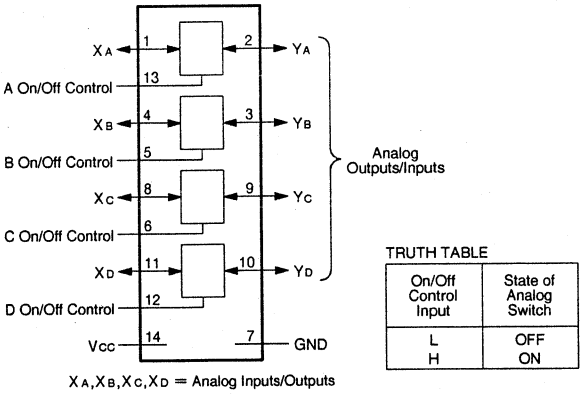

TRUTH TABLE

On/Off Control Input	State of Analog Switch
L	OFF
H	ON

XA,XB,XC,XD = Analog Inputs/Outputs

PCB-MAIN (3/8)

IC502 CXA3106AQ

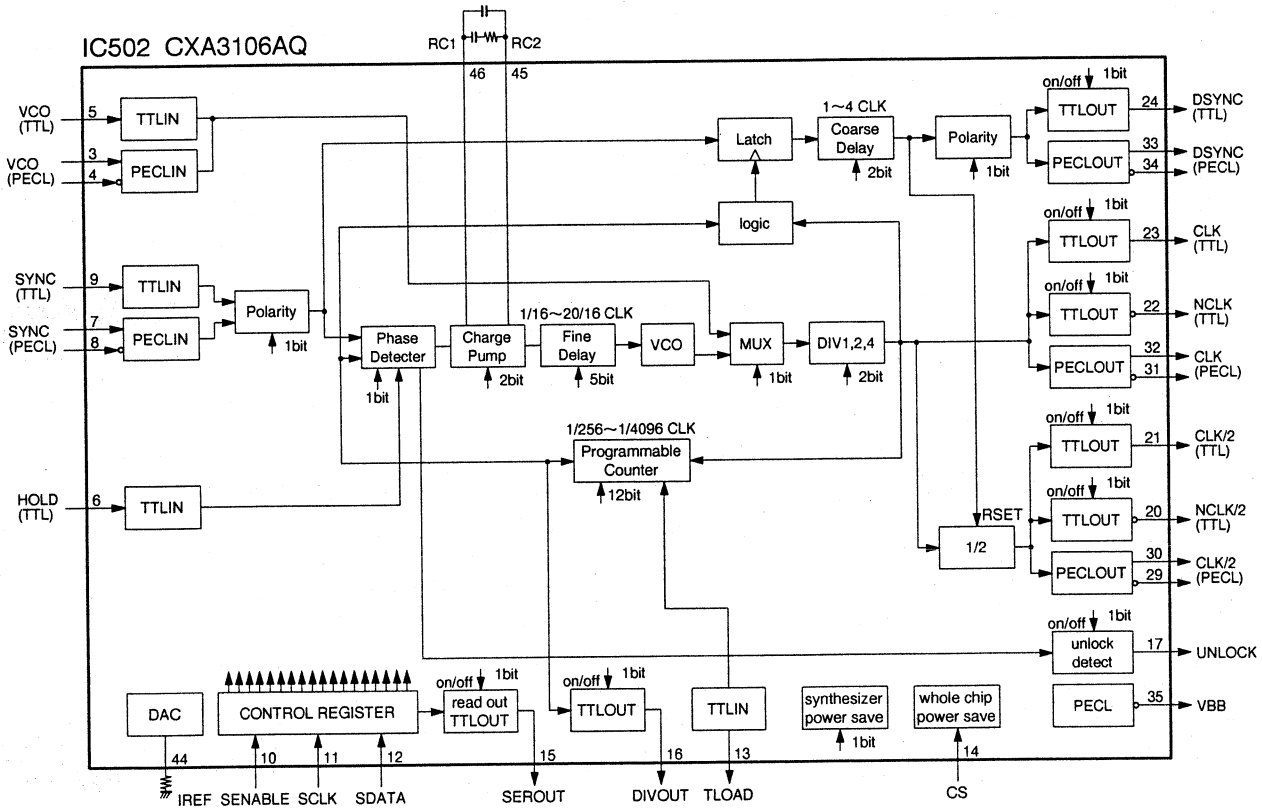

IC503 PQ05DZ1U

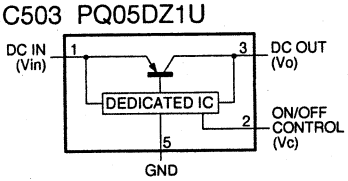

COMMON USE

IC520 M52036SP

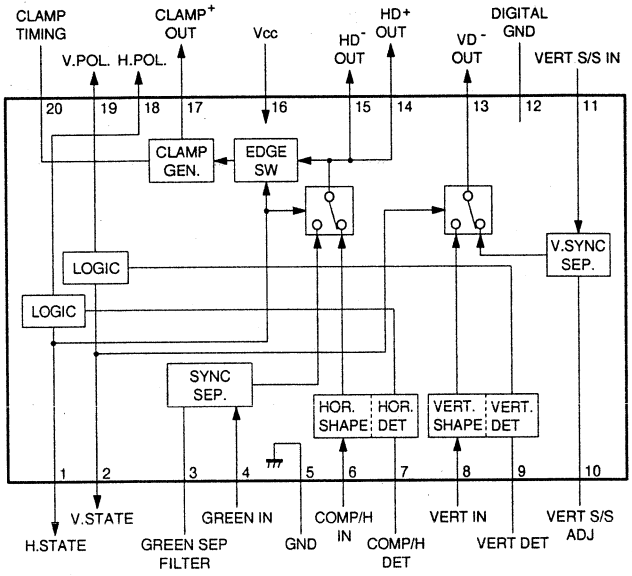

IC603 HD74HC4053FP

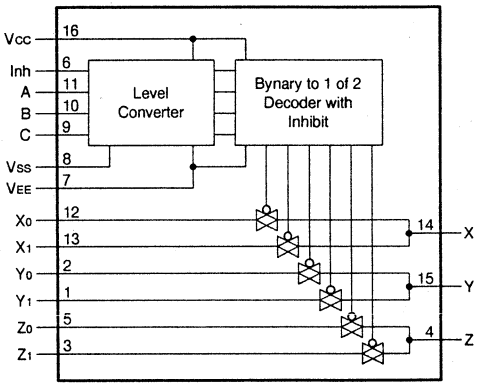

FUNCTION TABLE

CONTROL INPUTS				ON SWITCH		
INHIBIT	SELECT					
	C	B	A			
L	L	L	L	Z_0	Y_0	X_0
L	L	L	H	Z_0	Y_0	X_1
L	L	H	L	Z_0	Y_1	X_0
L	L	H	H	Z_0	Y_1	X_1
L	H	L	L	Z_1	Y_0	X_0
L	H	L	H	Z_1	Y_1	X_1
L	H	H	L	Z_1	Y_1	X_0
L	H	H	H	Z_1	Y_0	X_1
H	X	X	X	–		

H : HIGH VOLTAGE LEVEL
L : LOW VOLTAGE LEVEL
X : IMMATERIAL

IC600,601,602 LM1201M

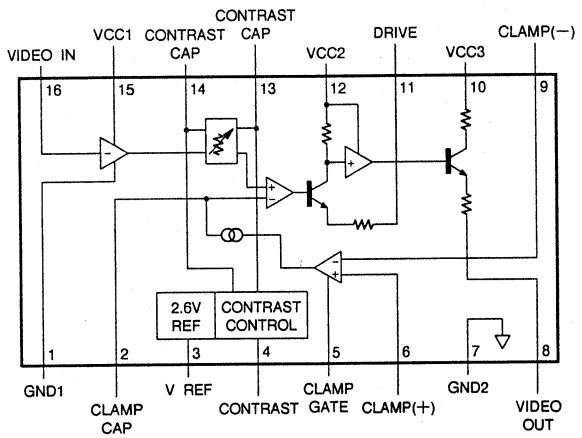

IC604 TL431CPS

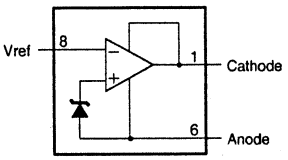

IC6E0 M62358FP

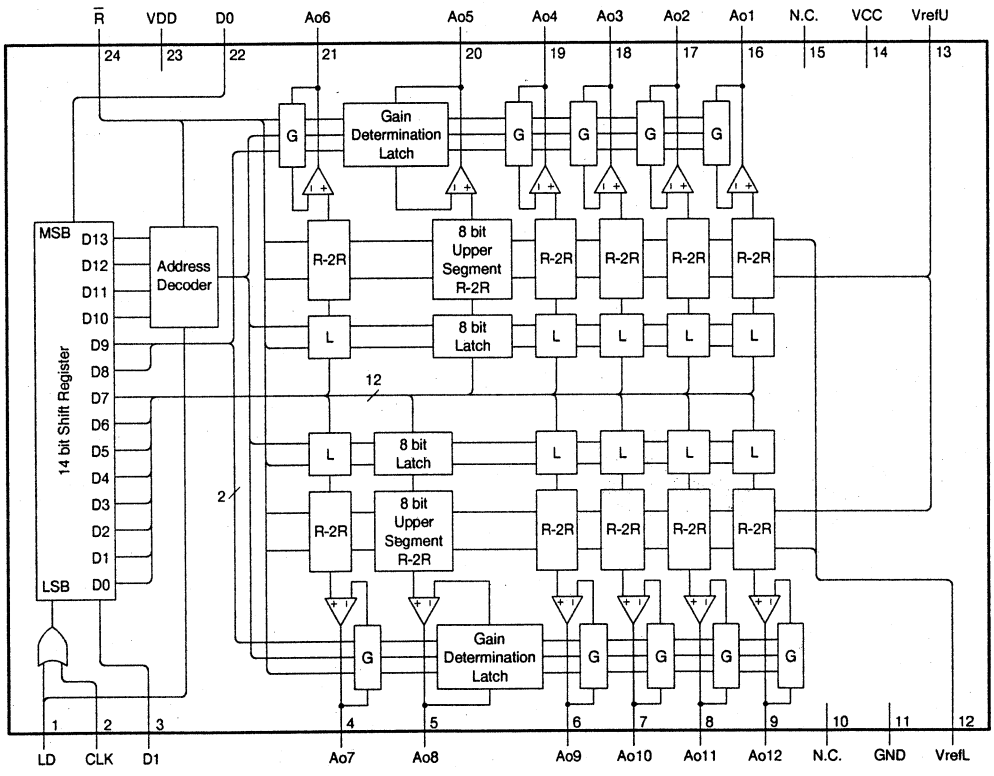

COMMON USE

IC607,608,609 CXA3026AQ

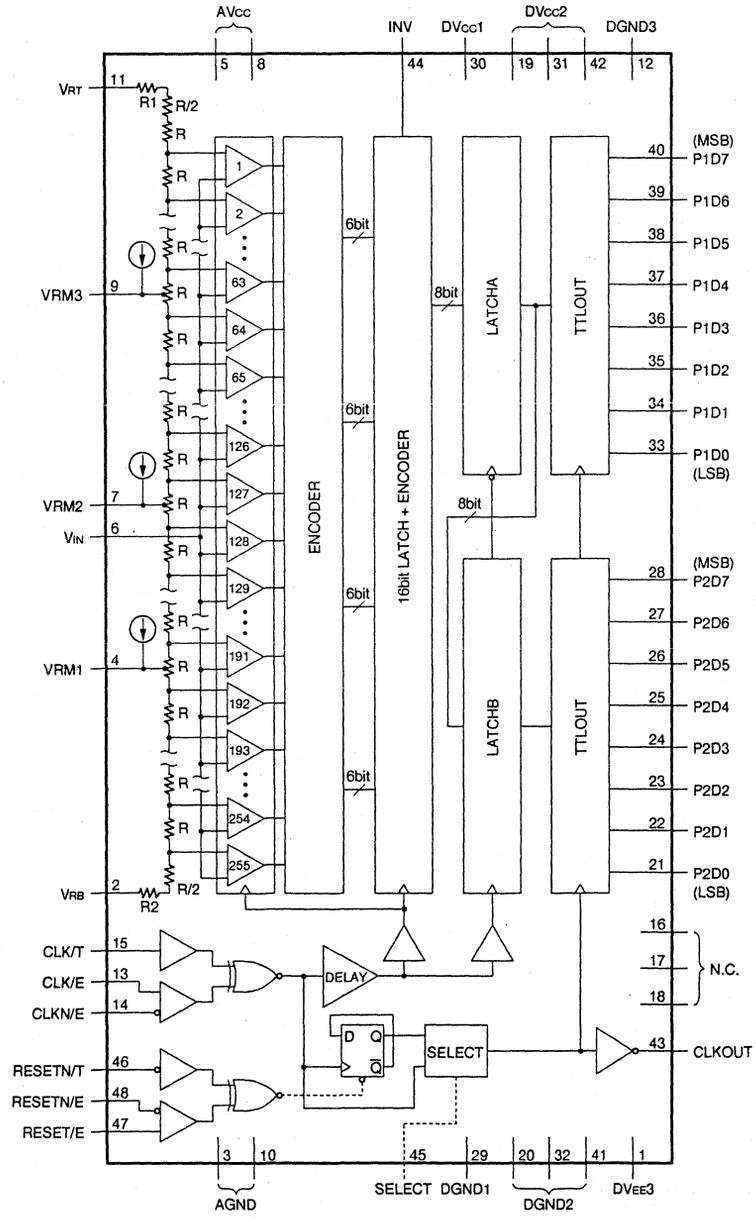

IC7Z0 ADM208EARS

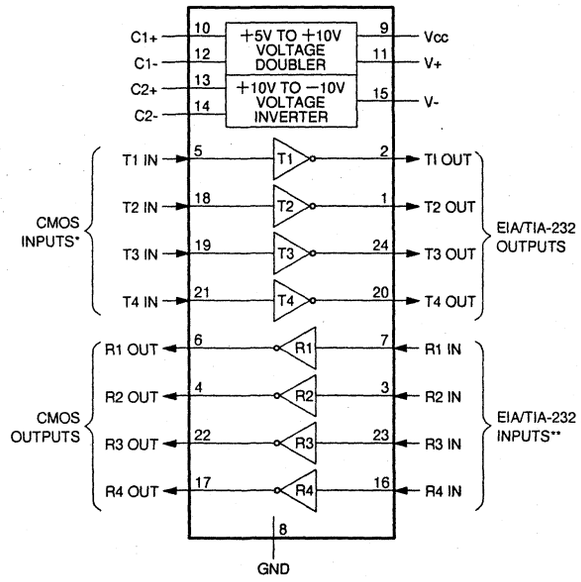

* INTERNAL 400kΩ PULL-UP REGISTER ON EACH CMOS INPUT
** INTERNAL 5kΩ PULL-DOWN RESISTOR ON EACH RS-232 INPUT

COMMON USE

PCB-MAIN (4/8)

IC4P1 HD74LVC245T

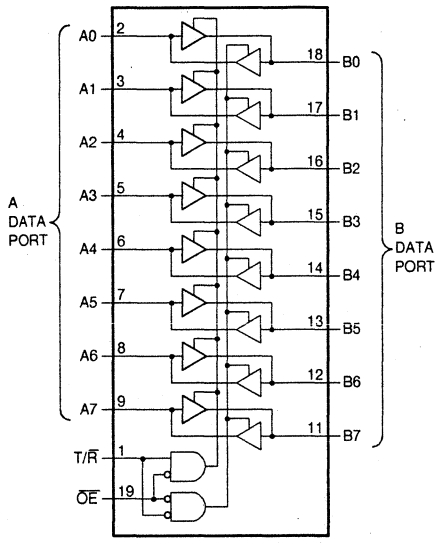

*TRUTH TABLE

IN		OUT
$\overline{OE}$	T/$\overline{R}$	
L	L	B DATA→A DATA
L	H	A DATA→B DATA
H	X	ISOLATION

H : HIGH LEVEL
L : LOW LEVEL
X : DON'T CARE

PCB-MAIN (5/8)

IC400 PST9128NR

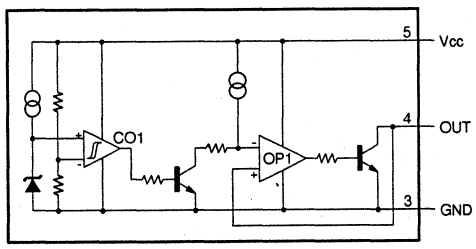

IC404 HD74LVC245T

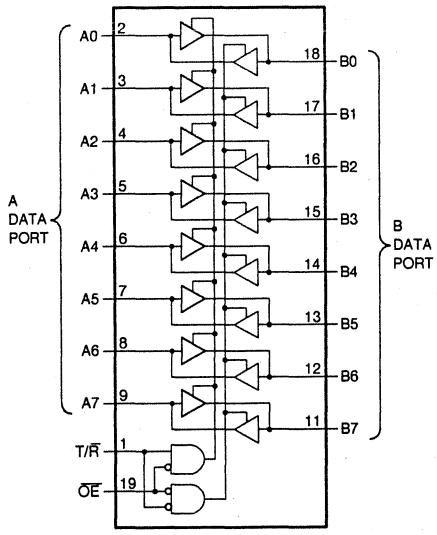

*TRUTH TABLE

IN		OUT
$\overline{OE}$	T/$\overline{R}$	
L	L	B DATA→A DATA
L	H	A DATA→B DATA
H	X	ISOLATION

H : HIGH LEVEL
L : LOW LEVEL
X : DON'T CARE

IC4C1,4B5,4G5,4R5 μPD4516161G5-A12-7JF

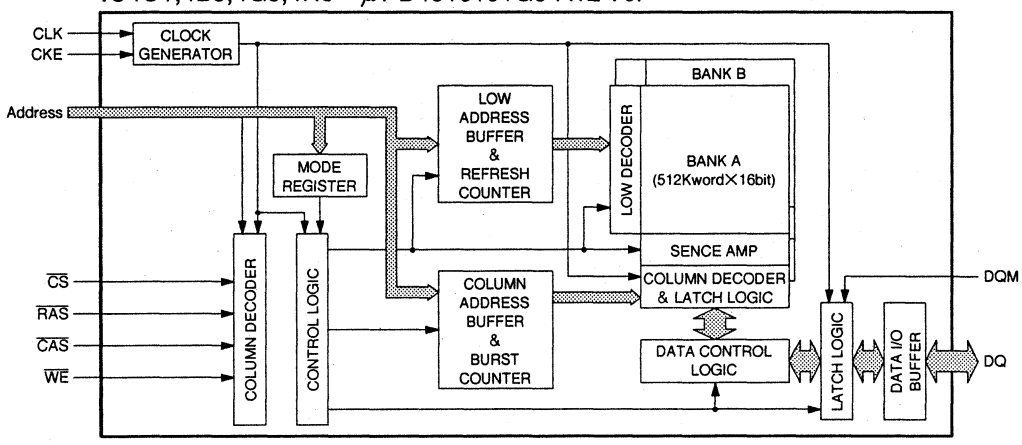

Pin No.	Signal Name	Pin No.	Signal Name	Pin No.	Signal Name	Pin No.	Signal Name	Pin No.	Signal Name
1	Vcc	11	DQ6	21	A0	31	A8	41	VssQ
2	DQ0	12	DQ7	22	A1	32	A9	42	DQ10
3	DQ1	13	VccQ	23	A2	33	NC	43	DQ11
4	VssQ	14	LDQM	24	A3	34	CKE	44	VccQ
5	DQ2	15	$\overline{WE}$	25	Vcc	35	CLK	45	DQ12
6	DQ3	16	$\overline{CAS}$	26	Vss	36	UDQM	46	DQ13
7	VccQ	17	$\overline{RAS}$	27	A4	37	NC	47	VssQ
8	DQ4	18	$\overline{CS}$	28	A5	38	VccQ	48	DQ14
9	DQ5	19	A11	29	A6	39	DQ8	49	DQ15
10	VssQ	20	A10	30	A7	40	DQ9	50	Vss

COMMON USE

PCB-MAIN (7/8)

IC700 M38022M4-445FP

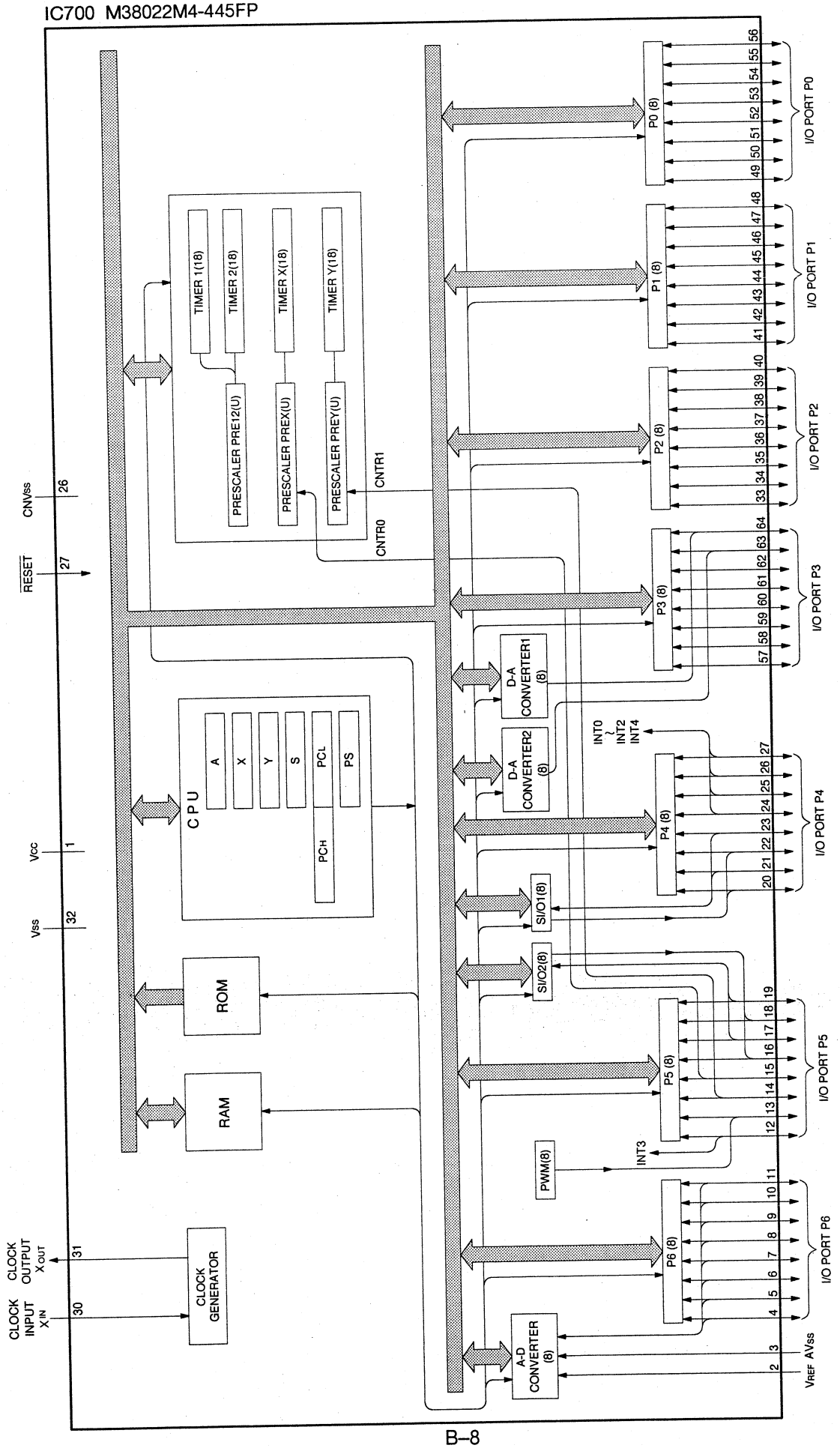

COMMON USE

IC702 24LC65T-I＊SM

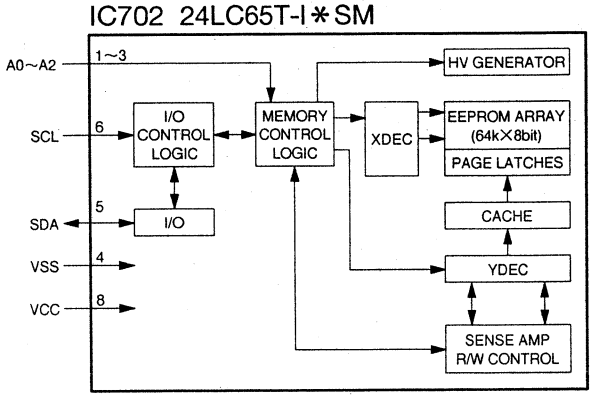

IC703 74ACT245MTC

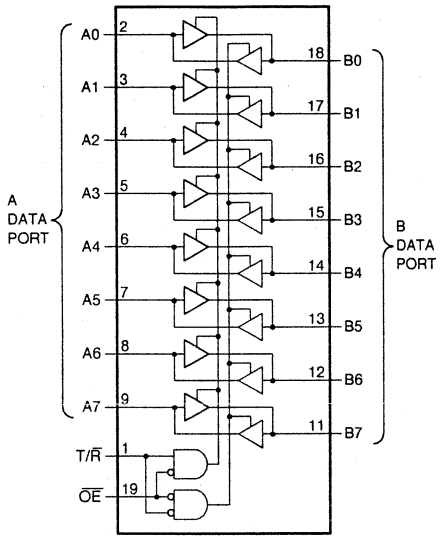

＊TRUTH TABLE

IN		OUT
OE̅	T/R̄	
L	L	B DATA→A DATA
L	H	A DATA→B DATA
H	X	ISOLATION

H : HIGH LEVEL
L : LOW LEVEL
X : DON'T CARE

PCB-MAIN (8/8)

IC707 HD74HC4053FP

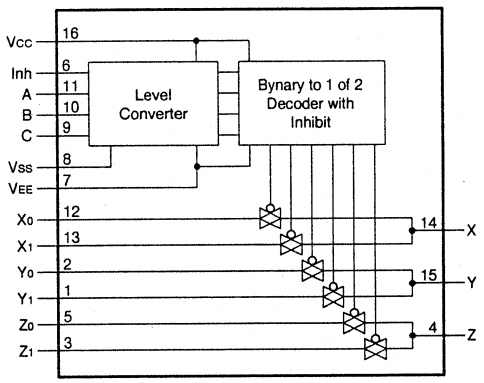

FUNCTION TABLE

CONTROL INPUTS				ON SWITCH		
INHIBIT	SELECT					
	C	B	A			
L	L	L	L	Z0	Y0	X0
L	L	L	H	Z0	Y0	X1
L	L	H	L	Z0	Y1	X0
L	L	H	H	Z0	Y1	X1
L	H	L	L	Z1	Y0	X0
L	H	L	H	Z1	Y1	X1
L	H	H	L	Z1	Y1	X0
L	H	H	H	Z1	Y0	X1
H	X	X	X	—		

H : HIGH VOLTAGE LEVEL
L : LOW VOLTAGE LEVEL
X : IMMATERIAL

IC709 HD74LVC138T

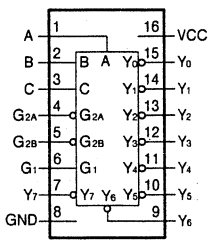

＊TRUTH TABLE

INPUTS						OUTPUT							
ENABLE			SELECT										
G1	G2A	G2B	C	B	A	Y0	Y1	Y2	Y3	Y4	Y5	Y6	Y7
X	X	H	X	X	X	H	H	H	H	H	H	H	H
X	H	X	X	X	X	H	H	H	H	H	H	H	H
L	X	X	X	X	X	H	H	H	H	H	H	H	H
H	L	L	L	L	L	L	H	H	H	H	H	H	H
H	L	L	L	L	H	H	L	H	H	H	H	H	H
H	L	L	L	H	L	H	H	L	H	H	H	H	H
H	L	L	L	H	H	H	H	H	L	H	H	H	H
H	L	L	H	L	L	H	H	H	H	L	H	H	H
H	L	L	H	L	H	H	H	H	H	H	L	H	H
H	L	L	H	H	L	H	H	H	H	H	H	L	H
H	L	L	H	H	H	H	H	H	H	H	H	H	L

H : HIGH LEVEL
L : LOW LEVEL
X : DON'T CARE

IC708,711 HD74LVC245T

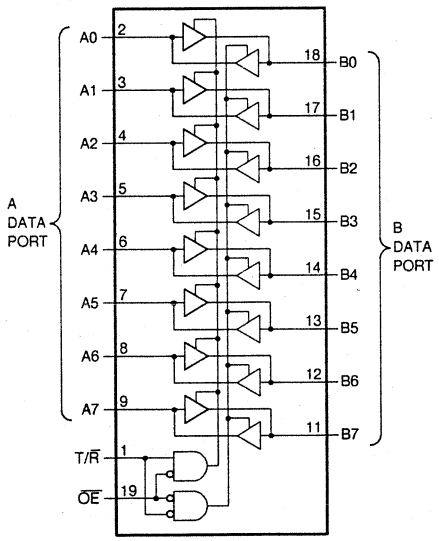

＊TRUTH TABLE

IN		OUT
OE̅	T/R̄	
L	L	B DATA→A DATA
L	H	A DATA→B DATA
H	X	ISOLATION

H : HIGH LEVEL
L : LOW LEVEL
X : DON'T CARE

COMMON USE

IC712 TL16C550CFN

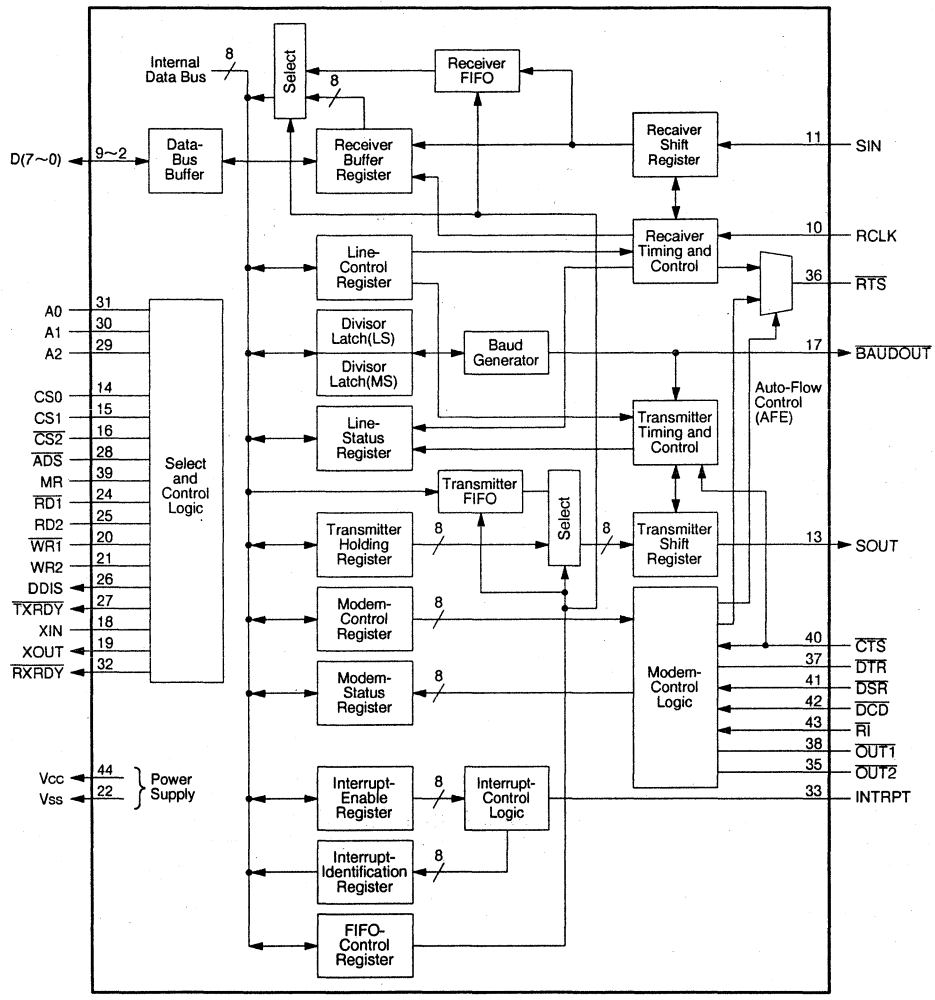

IC713,714 μPD71055GB-10-3B4

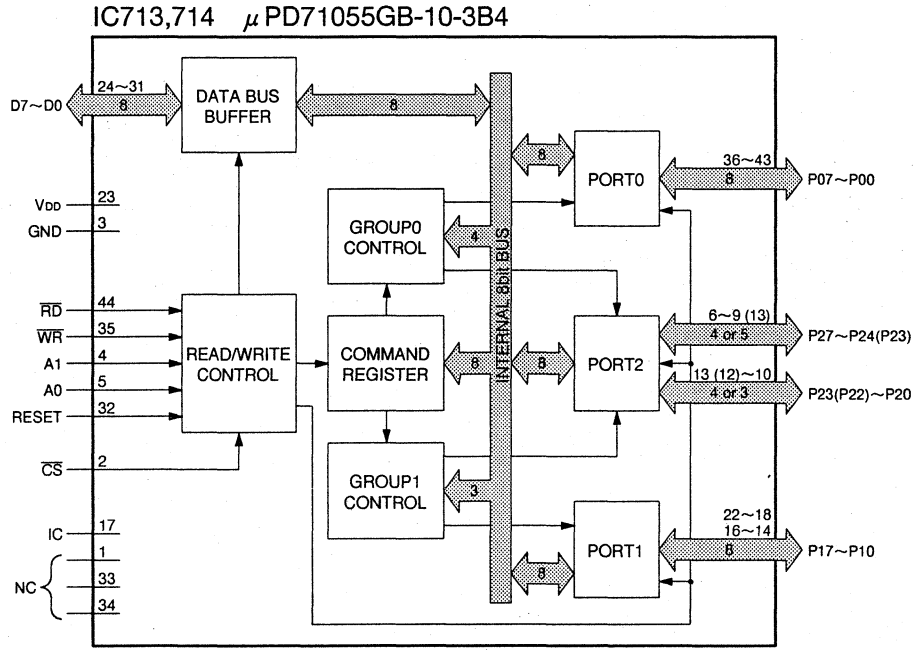

COMMON USE

PCB-DECODER

IC2A0 M52055FP

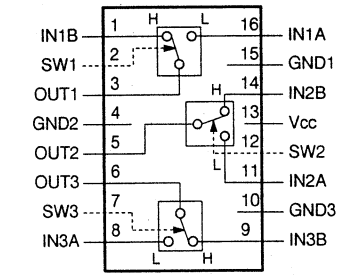

IC354 TDA2822

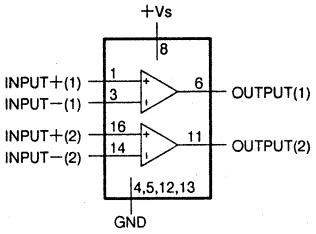

IC2A2 TDA9141

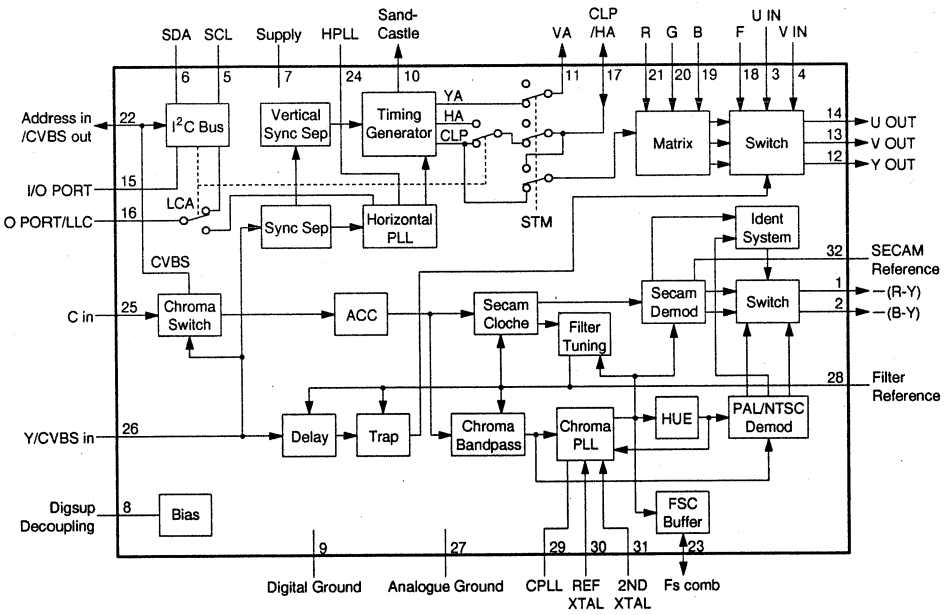

IC2A3 TDA4665T

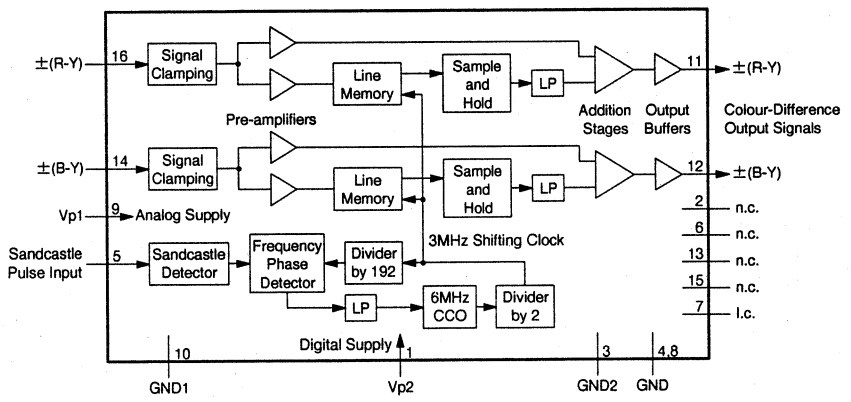

IC2A5 NJM2209M

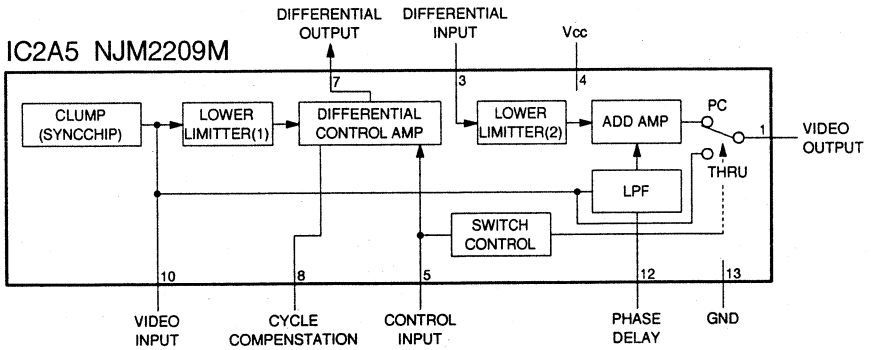

COMMON USE

PCB-PCCARD (1/2)

IC7A0 M32000D4AFP

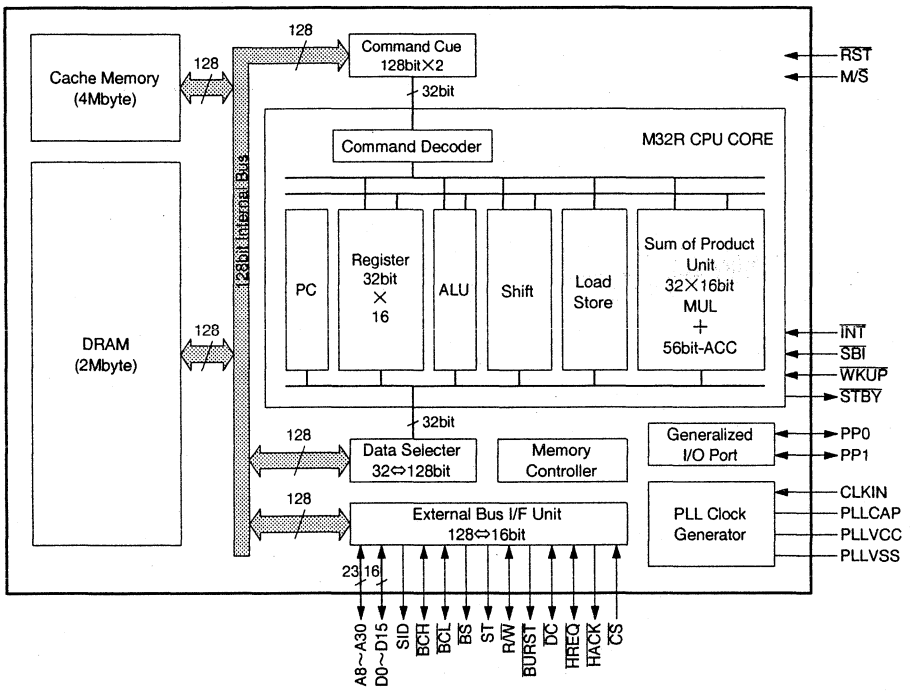

Pin No.	Signal Name	Pin No.	Signal Name	Pin No.	Signal Name	Pin No.	Signal Name	Pin No.	Signal Name
1	VCC	21	PP0	41	VCC	61	*1	81	VSS
2	A19	22	$\overline{CS}$	42	VSS	62	*1	82	D15
3	A18	23	A13	43	VSS	63	*1	83	D14
4	A17	24	A12	44	VCC	64	VCC	84	D13
5	A16	25	VSS	45	VCC	65	VSS	85	D12
6	VSS	26	A11	46	D4	66	VSS	86	VCC
7	A15	27	A10	47	D5	67	VCC	87	$\overline{BURST}$
8	A14	28	A9	48	D6	68	*1	88	ST
9	*1	29	A8	49	D7	69	R/$\overline{W}$	89	VCC
10	VCC	30	VCC	50	VSS	70	VCC	90	VSS
11	$\overline{STBY}$	31	VSS	51	VCC	71	SID	91	VCC
12	$\overline{DC}$	32	D0	52	A20	72	$\overline{BCL}$	92	VSS
13	$\overline{BS}$	33	D1	53	A21	73	$\overline{BCH}$	93	VCC
14	PLLVCC	34	D2	54	A22	74	A26	94	$\overline{WKUP}$
15	PLLVSS	35	D3	55	A23	75	VSS	95	VCC
16	PLLCAP	36	*1	56	VSS	76	A27	96	D11
17	VSS	37	$\overline{INT}$	57	A24	77	A28	97	D10
18	CLKIN	38	$\overline{SBI}$	58	A25	78	A29	98	D9
19	*2	39	$\overline{HACK}$	59	M/$\overline{S}$	79	A30	99	D8
20	PP1	40	$\overline{HREQ}$	60	$\overline{RST}$	80	VCC	100	VSS

Note: Connect *1 terminal to Vcc.
Connect *2 terminal to Vss.

IC7A2 PST9128NR

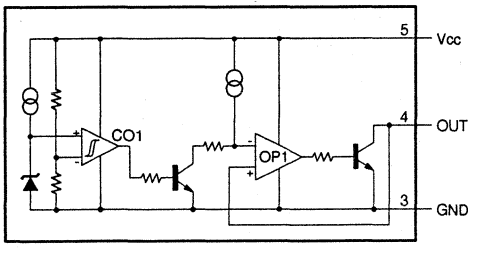

IC7A4,7A5,7A6 74ACT245MTC
IC7A9,7B0,7B1,7B2,7B3,7F4 HD74LVC245T

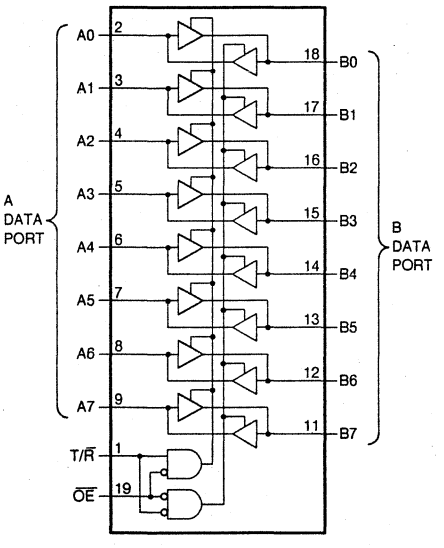

*TRUTH TABLE

IN		OUT
$\overline{OE}$	T/$\overline{R}$	
L	L	B DATA→A DATA
L	H	A DATA→B DATA
H	X	ISOLATION

H : HIGH LEVEL
L : LOW LEVEL
X : DON'T CARE

COMMON USE

PCB-PCCARD (2/2)

IC7B7 TE28F160S5

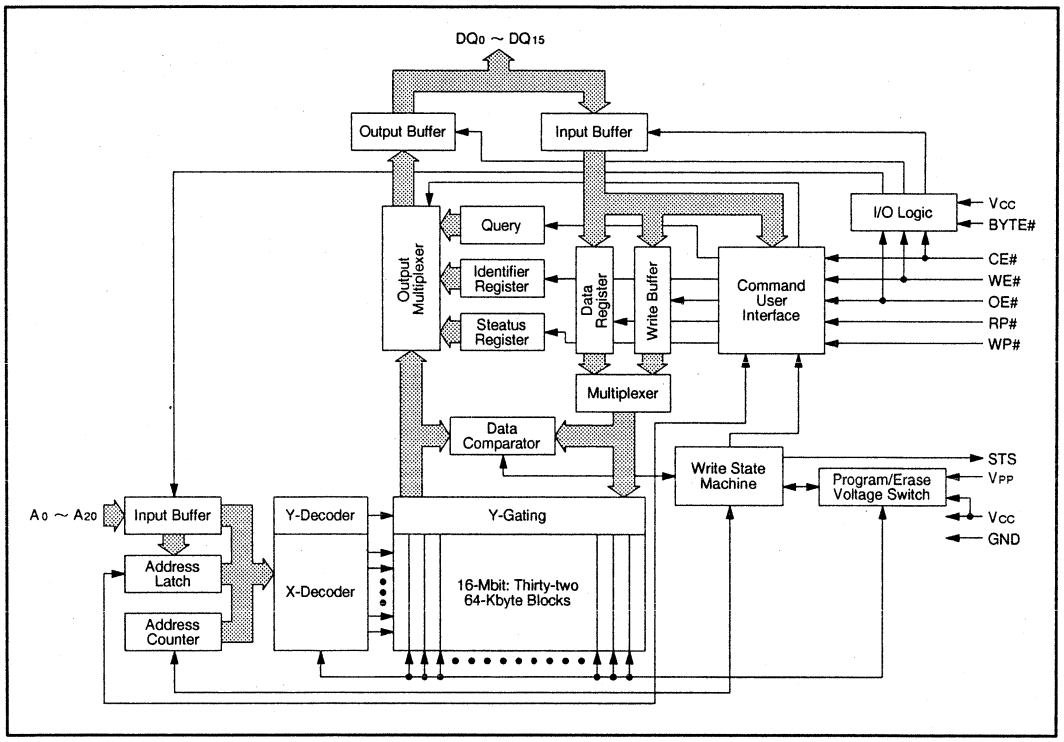

Pin No.	Signal Name	Pin No.	Signal Name	Pin No.	Signal Name	Pin No.	Signal Name	Pin No.	Signal Name	Pin No.	Signal Name	Pin No.	Signal Name
1	NC	9	Vcc	17	A11	25	A4	33	DQ0	41	DQ11	49	DQ6
2	CE1#	10	A15	18	A10	26	A3	34	DQ8	42	GND	50	DQ14
3	NC	11	A14	19	A9	27	A2	35	DQ1	43	Vcc	51	DQ7
4	A20	12	A13	20	A8	28	A1	36	DQ9	44	DQ4	52	DQ15
5	A19	13	A12	21	GND	29	NC	37	Vcc	45	DQ12	53	STS
6	A18	14	CE0#	22	A7	30	NC	38	DQ2	46	DQ5	54	OE#
7	A17	15	VPP	23	A6	31	BYTE#	39	DQ10	47	DQ13	55	WE#
8	A16	16	RP#	24	A5	32	A0	40	DQ3	48	GND	56	WP#

IC7B5,7B6,7C5~7C9,7D0~7D9 HD74LVC245T
IC7E0~7E3,7E9 HD74LVC245T
IC7E8 74ACT245MTC

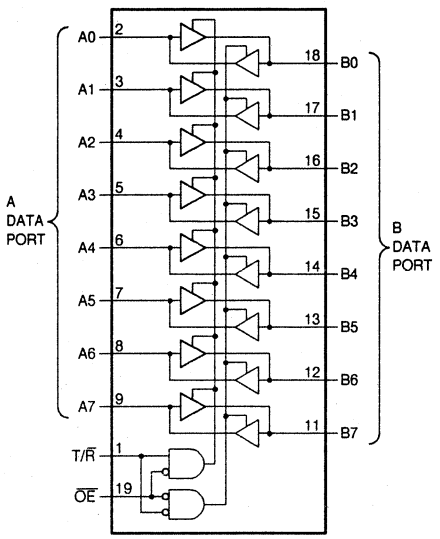

*TRUTH TABLE

IN		OUT
OE	T/R	
L	L	B DATA→A DATA
L	H	A DATA→B DATA
H	X	ISOLATION

H : HIGH LEVEL
L : LOW LEVEL
X : DON'T CARE

IC7E4 TPS2205IDB

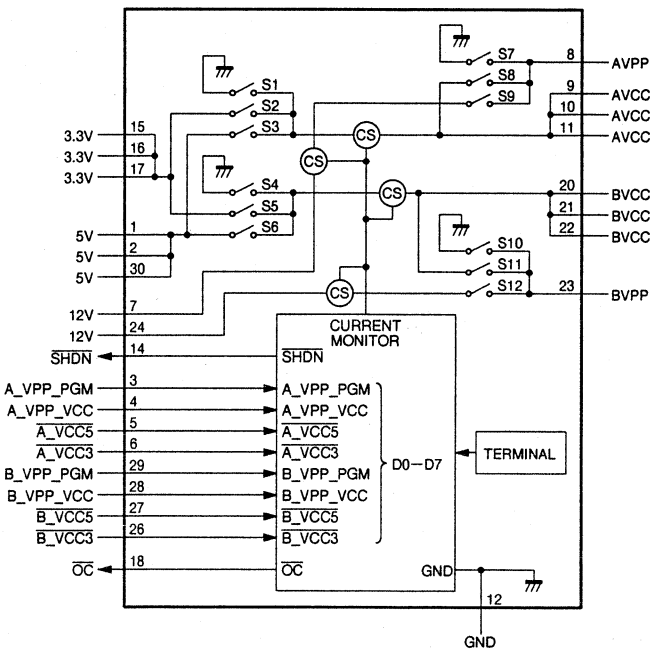

IC7C1,7C2 μPD71055GB-10-3B4

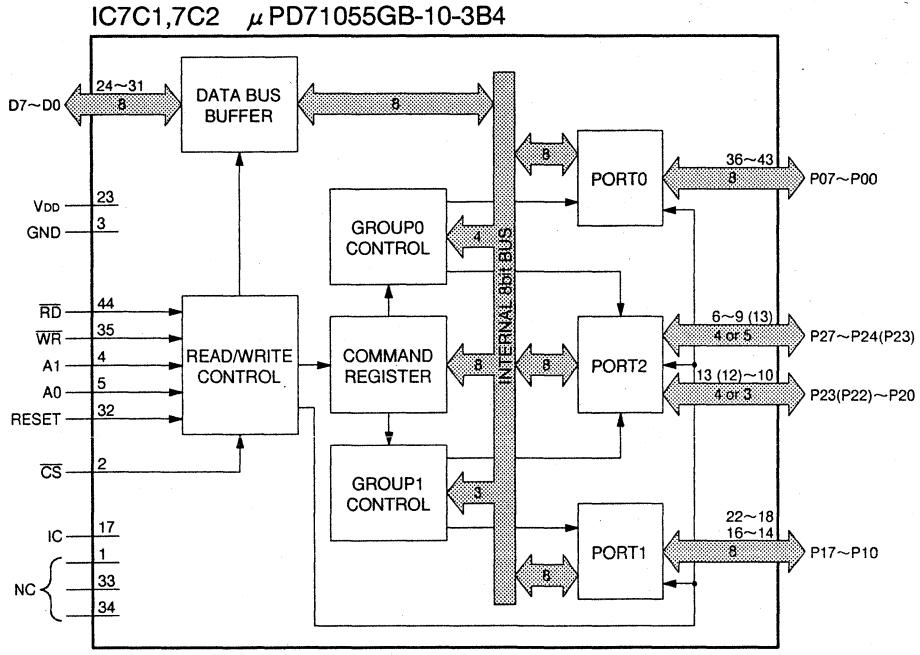

IC7E7 24LC65T-1*SM

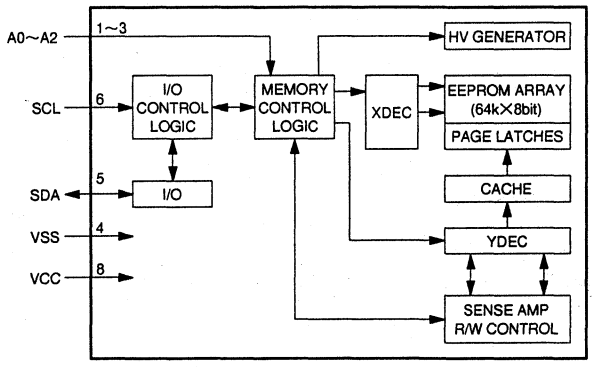

PCB-POWER

IC950 STR-M6833A

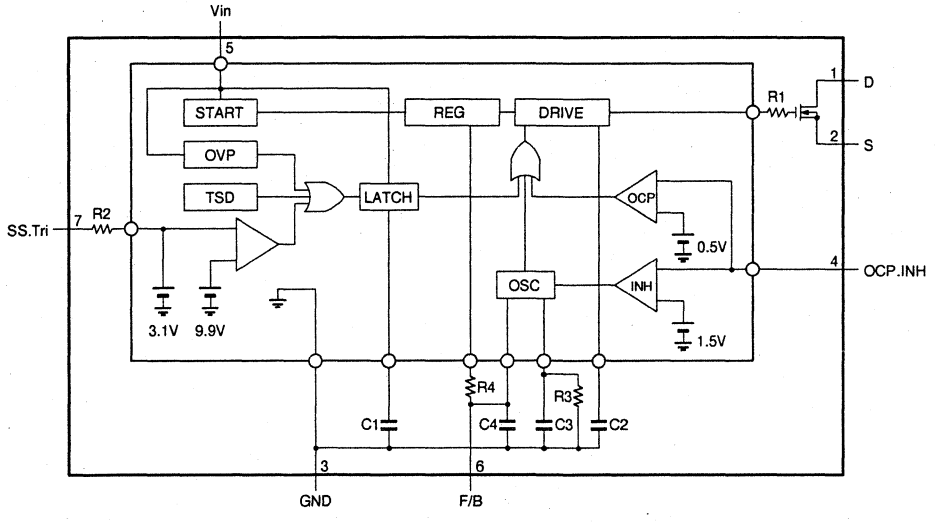

COMMON USE

PCB-POWER SUB

IC9A0 SI-3150FA
IC9A3 SI-3033C
IC9A6 SI-3050F

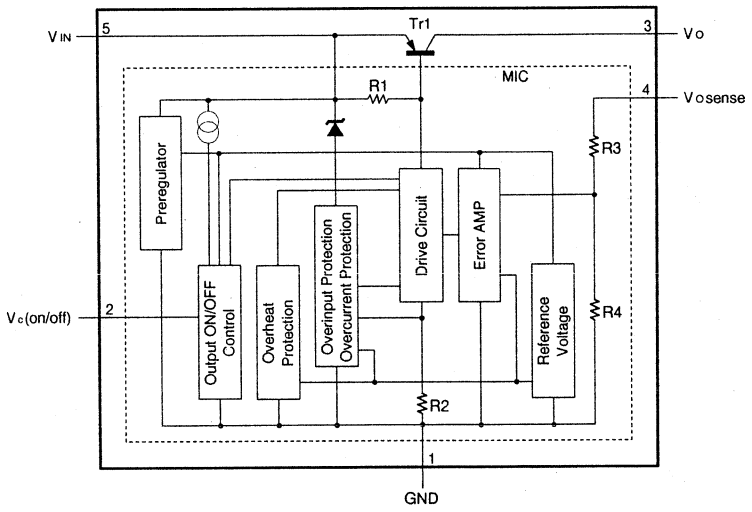

IC9A1 LM2991T

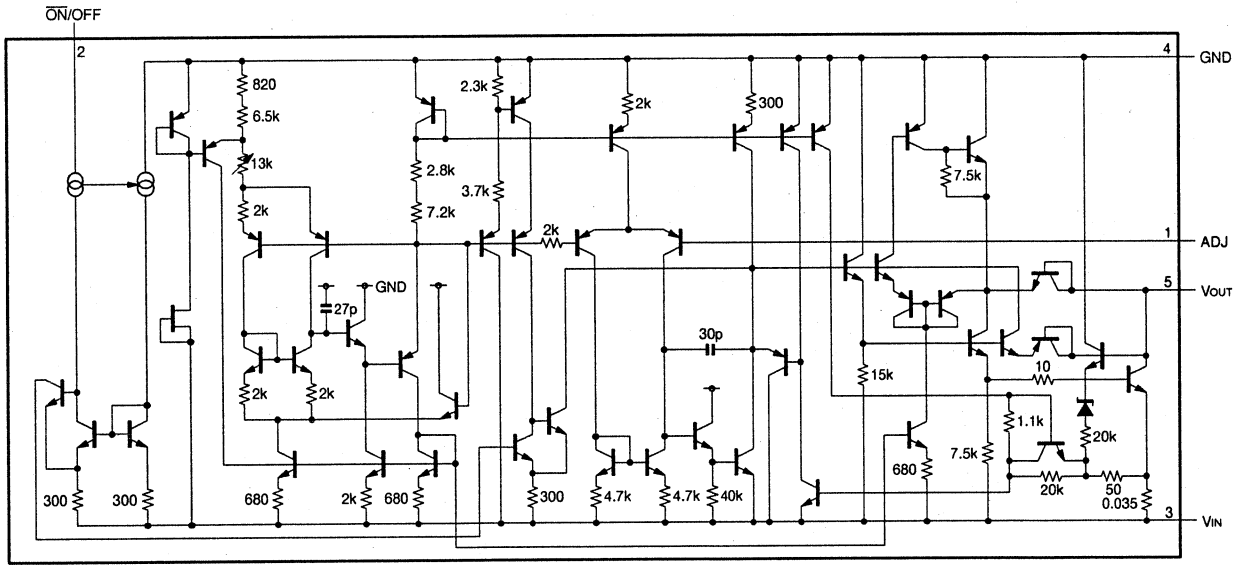

IC9A7 SI-3050C
IC9A8 SI-3120C

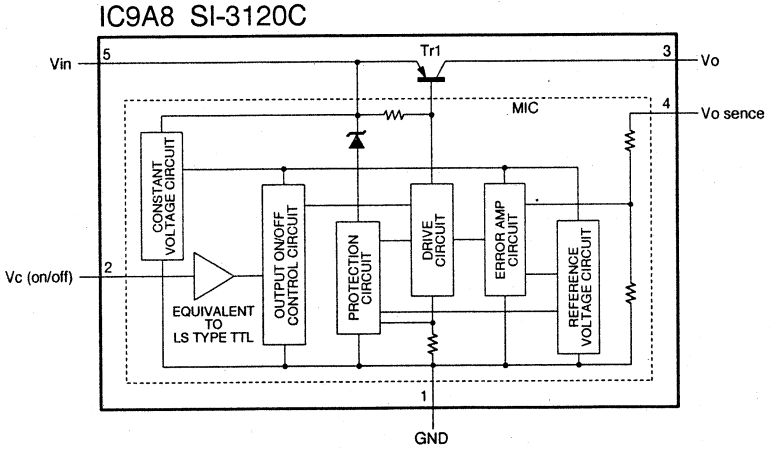

COMMON USE

PCB-POWER SUB2

IC9B0 SI-3120FA

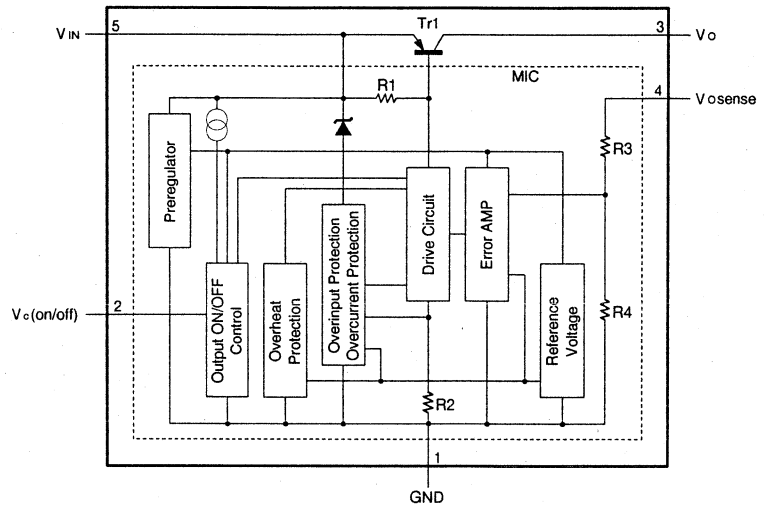

IC9B1 SI-3050C

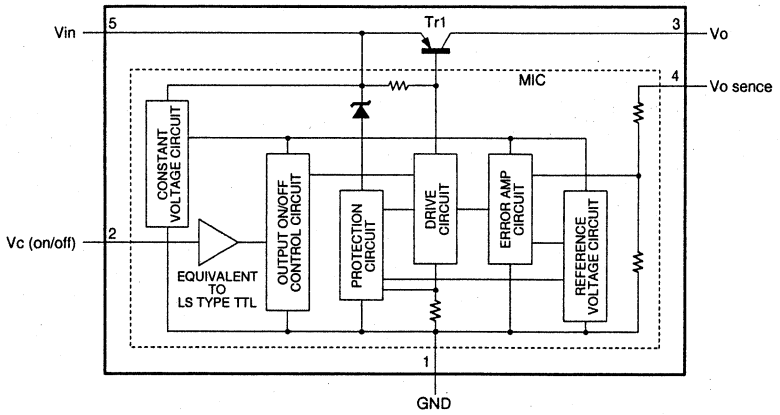

PCB-PFC

IC9M0 FA5331M

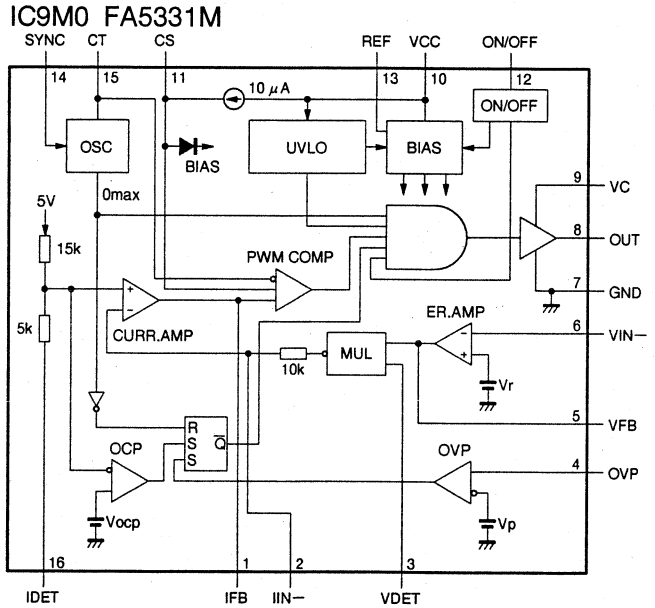

COMMON USE

PCB-LAMP POWER

IC9V1 SI-3120F

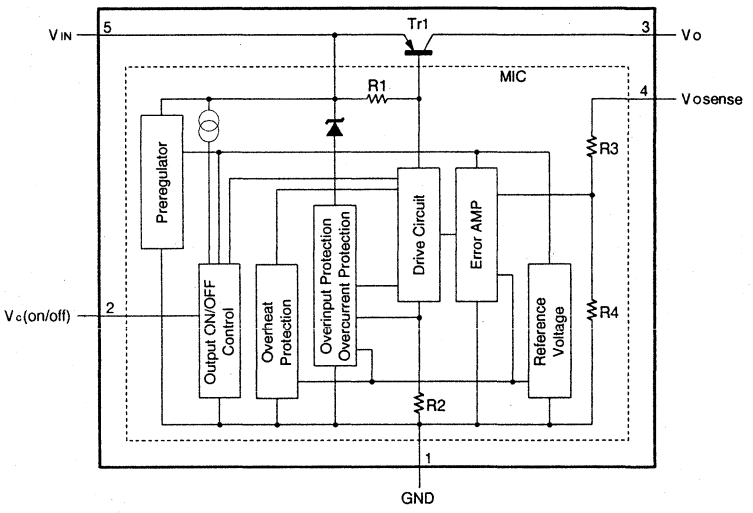

PCB-LP CONT

IC9X0 MB3769APF

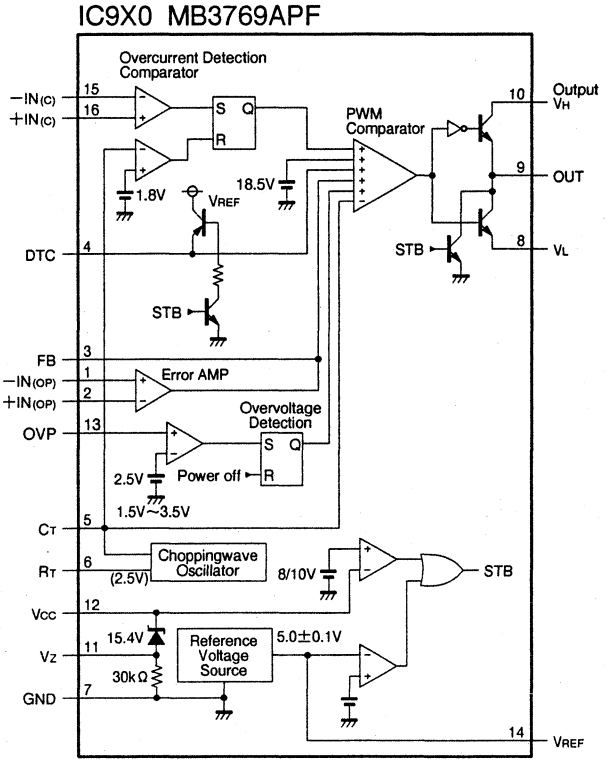

COMMON USE

[MEMO]